DRAWING MADE IN THIRD ANGLE PROJECTION
THIS DRAWING IS UNPUBLISHED. RELEASED FOR PUBLICATION ,19 .
© COPYRIGHT 19 BY AMP INCORPORATED. ALL INTERNATIONAL RIGHTS RESERVED.

LOC	DIST	P	F
EY	24		

REVISIONS

ZONE	LTR	DESCRIPTION	DATE	APPD
	B	REV; EC 0502-0078-96	07MAY97	DS

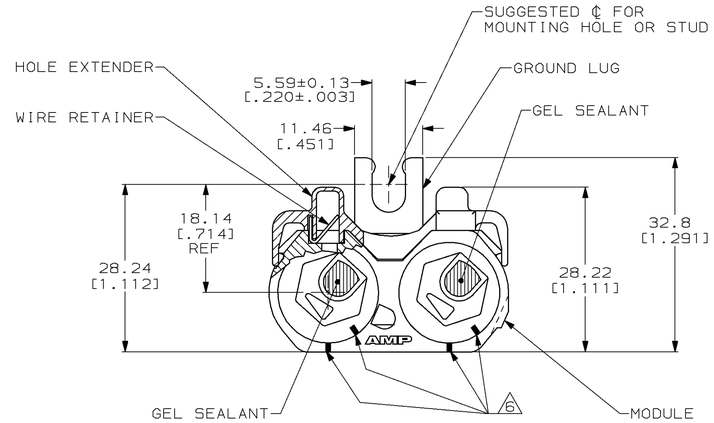

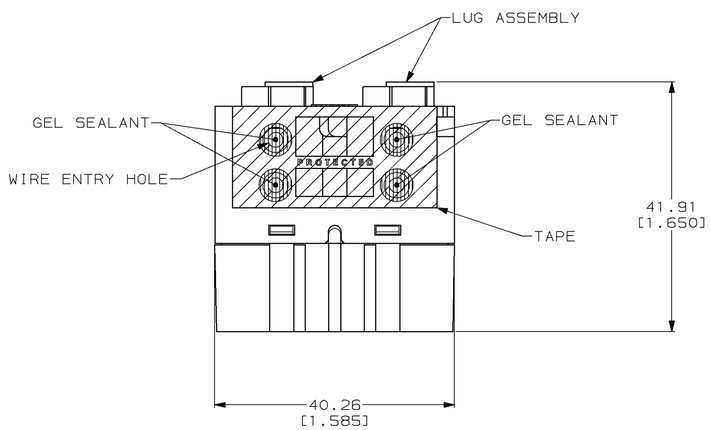

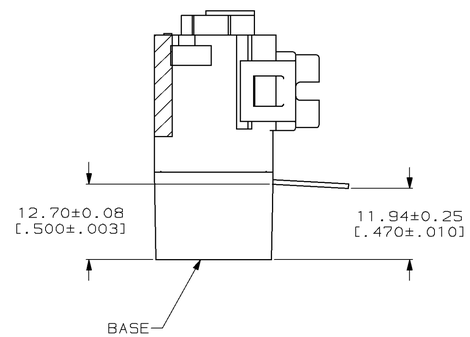

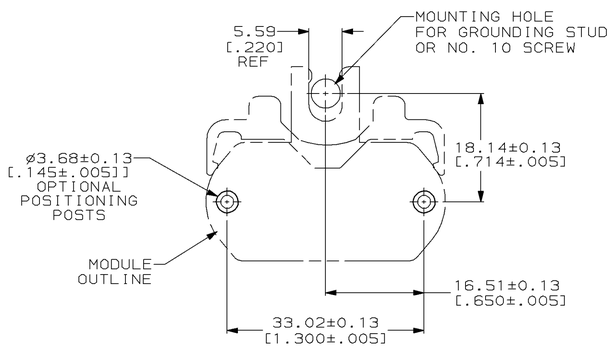

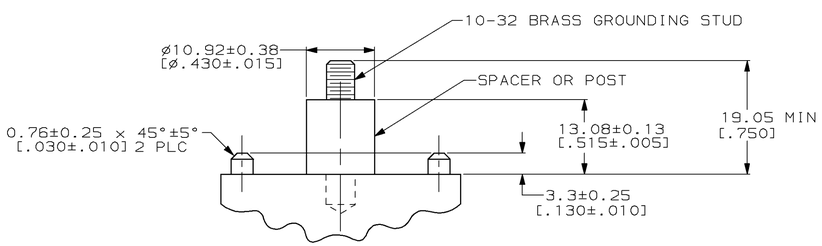

SUGGESTED MOUNTING DIMENSIONS

6. YELLOW STRIPES ON LUG AND MODULE WILL BE ALIGNED WHEN IN CLOSED POSITION. STRIPES MUST BE FULLY ALIGNED TO COMPLETE TERMINATION.

1. DIMENSIONS ARE MAXIMUM UNLESS OTHERWISE SPECIFIED.

2. MATERIAL: MODULE & BASE - POLYESTER MOLDING COMPOUND, NATURAL. TAPE - POLYURETHANE, TRANSPARENT. GROUND LUG - COPPER ALLOY WITH 2.54µm [.000100] MINIMUM THICK TIN PRECOATING. LUG ASSEMBLY: LUG - POLYESTER MOLDING COMPOUND, BLACK; TERMINAL - COPPER ALLOY PLATED WITH 2.54µm [.000100] MINIMUM TIN-LEAD ALLOY OVER NICKEL FLASH.
SEALANT - LIQUID GEL.
HOLE EXTENDER - POLYCARBONATE, TRANSPARENT.

3. EACH WIRE ENTRY HOLE ACCEPTS ONE UNSTRIPPED DROP-WIRE CONDUCTOR: EITHER A SINGLE 18-1/2 AWG COPPER-STEEL 4.572 [.180] OUTSIDE INSULATION MAXIMUM DIAMETER OR A SINGLE 22 - 24 AWG SOLID COPPER 0.762 [.030] OUTSIDE INSULATION MINIMUM DIAMETER. DROP-WIRES WITH CONDUCTORS OTHER THAN THESE SHALL BE SUBMITTED TO AMP PRODUCT ENGINEERS FOR APPLICATION APPROVAL.

4. DROP-WIRE TERMINATION IS ACCOMPLISHED AS FOLLOWS:

4.1 WHEN TWO DROP-WIRES ARE TO BE TERMINATED, ONE UNSTRIPPED CONDUCTOR FROM ONE DROP-WIRE IS FULLY INSERTED INTO EITHER WIRE ENTRY HOLE IN ONE LUG. ONE UNSTRIPPED CONDUCTOR FROM SECOND DROP-WIRE IS THEN FULLY INSERTED INTO OTHER WIRE ENTRY HOLE OF SAME LUG. WHILE CONDUCTORS ARE HELD FIRMLY IN PLACE, THIS LUG IS ROTATED APPROXIMATELY 70° UNTIL IT CONTACTS BUILT-IN STOP. PROCEDURE IS THEN REPEATED STARTING WITH INSERTION OF SECOND CONDUCTOR FROM EACH DROP-WIRE INTO WIRE ENTRY HOLES IN OTHER LUG.

4.2 WHEN ONE DROP-WIRE IS TO BE TERMINATED, ONE UNSTRIPPED CONDUCTOR IS FULLY INSERTED INTO EITHER WIRE ENTRY HOLE IN ONE LUG. WHILE CONDUCTOR IS HELD FIRMLY IN PLACE, LUG IS ROTATED APPROXIMATELY 70° UNTIL IT CONTACTS BUILT-IN STOP. THE SECOND UNSTRIPPED CONDUCTOR IS THEN FULLY INSERTED INTO EITHER WIRE ENTRY HOLE IN OTHER LUG AND, WHILE CONDUCTOR IS HELD FIRMLY IN PLACE, THIS LUG IS ROTATED UNTIL IT CONTACTS BUILT-IN STOP.

5. GAS TUBE ARRESTERS RATED AT 60 AMPS ALLOWING SINGLE PAIR ENCLOSURE.

775254-1
PART NO

DO NOT SCALE PRINT.
UNLESS SPECIFIED
DIMENSIONS IN mm [INCHES]
TOLERANCES ON ,
2 PLC DEC ±
3 PLC DEC ±
ANGLES ±
1

MATERIAL 2

FINISH 2

DR 7-21-94 T. WOOTEN
CHK 10-14-94 D. HUSSEY
APPD 10-14-94 T. PIZZULO
APPD 10-14-94 R. GUZMAN
PRODUCT SPEC 108-30300
APPLICATION SPEC –
WEIGHT –

AMP Incorporated
Harrisburg, PA 17105-3608

NAME
MODULE ASSEMBLY, 1 PAIR, PROTECTED, GEL-FILLED QUIET FRONT

SIZE D | CAGE CODE 00779 | DRAWING NO C-775254
SCALE 2:1 | SHEET 1 OF 1

THIS DRAWING IS A CONTROLLED DOCUMENT FOR AMP INCORPORATED. IT IS SUBJECT TO CHANGE AND THE CONTROLLING ENGINEERING ORGANIZATION SHOULD BE CONTACTED FOR THE LATEST REVISION.

CUSTOMER DRAWING