THIS DRAWING IS UNPUBLISHED. RELEASED FOR PUBLICATION -,- .
© COPYRIGHT - BY TYCO ELECTRONICS CORPORATION. ALL RIGHTS RESERVED.

LOC	DIST
CE	16

REVISIONS

P	LTR	DESCRIPTION	DATE	DWN	APVD
	D	REV PER 0A40-0530-03	09DEC03	JWD	JD

1 MAXIMUM INSERTION LOSS IS 2.0dB PLUS CABLE ATTENUATION OF 3.0dB/km AT 1300nm. (SEE TABLE)

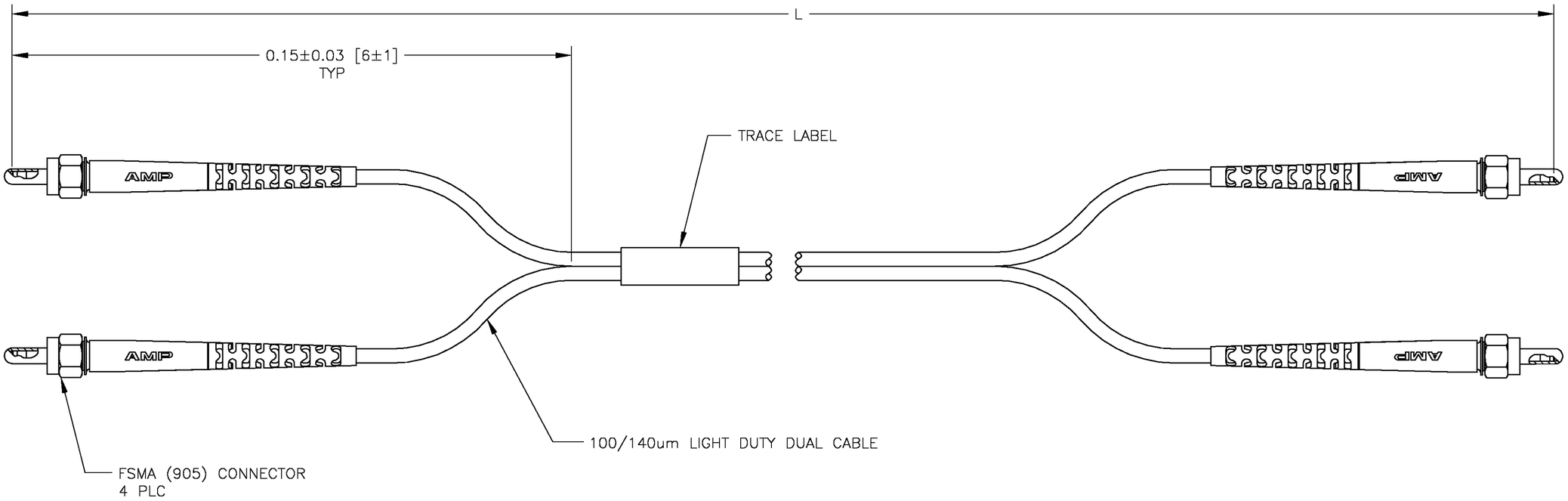

1 MAX IL (dB)	L METERS [INCHES]	PART NUMBER
2.53	175.00±1.75 [6890±69]	1-502153-1
2.45	150.00±1.50 [5906±59]	1-502153-0
2.41	137.16±1.00 [5400±54]	502153-9
2.24	80.00±0.08 [3150±31]	502153-8
2.09	30.48±0.30 [1200±12]	502153-7
2.09	30.00±0.30 [1181±12]	502153-6
2.03	10.00±0.15 [394±6]	502153-5
2.01	6.00±0.08 [236±3]	502153-4
2.01	5.00±0.08 [197±3]	502153-3
2.00	3.00±0.05 [118±2]	502153-2
2.00	1.00±0.05 [39±2]	502153-1

THIS DRAWING IS A CONTROLLED DOCUMENT.

DIMENSIONS: METERS [INCHES]

TOLERANCES UNLESS OTHERWISE SPECIFIED:
0 PLC ± -
1 PLC ± -
2 PLC ± -
3 PLC ± -
4 PLC ± -
ANGLES ± -

MATERIAL -
FINISH -

DWN B.BARRY 8-3-88
CHK J.ZEIDERS 8-3-88
APVD L.WEISS 8-4-88
PRODUCT SPEC -
APPLICATION SPEC -
WEIGHT -

AMP Tyco Electronics Corporation
Harrisburg Pa, 17105-3608

NAME CABLE ASSEMBLY, FIBER OPTIC, 100/140um DUAL FSMA (905), OPTIMATE -

SIZE	CAGE CODE	DRAWING NO	RESTRICTED TO
A2	00779	C-502153	-

CUSTOMER DRAWING SCALE NTS SHEET 1 OF 1 REV D

502153

AMP 1471-9 REV 31MAR2000

H:\DMTECMOD\