SPECIFICATION CONTROL DRAWING

REV:	DATE:
A	JULY 26, 2006

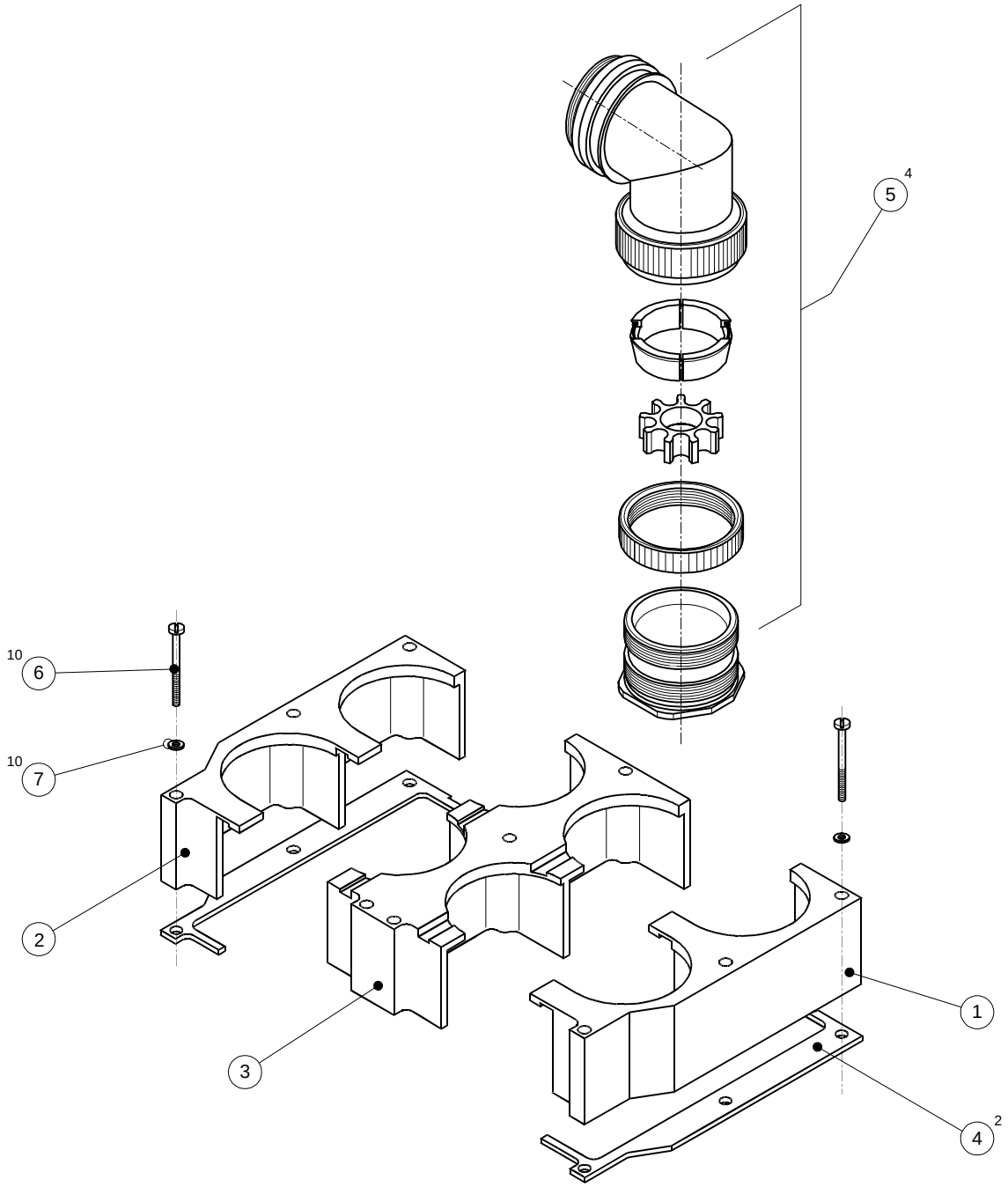

© 2006 Tyco Electronics Corporation. All rights reserved.

tyco Electronics	Tyco Electronics Corporation 300 Constitution Drive, Menlo Park, CA. 94025, U.S.A.	Raychem	TITLE: **HEXASHIELD ADAPTOR FOR ARINC 600 CONNECTOR–SIZE 3, 90 Degree BODIES AND TINEL CLAMP NUT**
UNLESS OTHERWISE SPECIFIED DIMENSIONS ARE IN MILLIMETERS. INCH DIMENSIONS ARE SHOWN IN BRACKETS	Tyco Electronics reserves the right to amend this drawing at any time. Users should evaluate the suitability of the product for their application.		DOCUMENT NO. **HEXA6-AY-90-03-AYY-2-YY**

DRAWN :	DATE:	CAGE CODE:	DCR #	File:	SCALE:	SHEET:
IRT	APR 2006	06090	D060137	87008	None	1 OF 4

If this document is printed it becomes uncontrolled. Check for the latest revision.

SPECIFICATION CONTROL DRAWING

REV:	DATE:
A	JULY 26, 2006

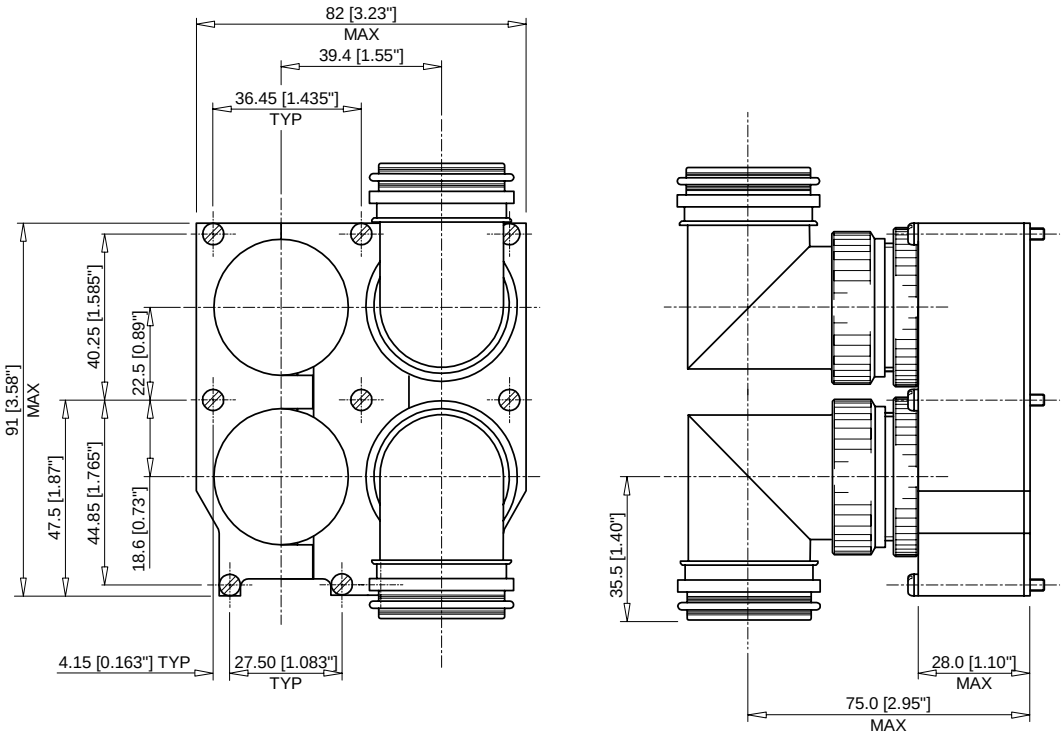

TOLERANCES:
0 FIG = ±0.5 [0.020"]
1 FIG = ±0.25 [0.010"]
2 FIG = ±0.12 [0.005"]

KIT DESCRIPTION

ITEM	QTY	DESCRIPTION	MATERIAL
1	1	LEFT SIDE SUPPORT	ALUMINIUM ALLOY
2	1	RIGHT SIDE SUPPORT	ALUMINIUM ALLOY
3	1	CENTRAL SUPPORT	ALUMINIUM ALLOY
4	2	RETENTION BAR	ALUMINIUM ALLOY
5	4	BODY ASSEMBLY – ØM31	
		BODY	ALUMINIUM ALLOY
		HOLDING NUT	ALUMINIUM ALLOY
	4	STAR – A9	ALUMINIUM ALLOY
	4	CONIC RING – A9	ALUMINIUM ALLOY
	4	TINEL ADAPTOR ASSEMBLY - 90° - A9	ALUMINIUM ALLOY
	4	TR18AI TINEL-LOCK™ RING	TINEL ALLOY-X
6	10	PAN HEAD SCREW - Ø4-40 UNC x 1.25" LG	STAINLESS STEEL - PASSIVATED
7	10	SPRING WASHER	STAINLESS STEEL - PASSIVATED

© 2006 Tyco Electronics Corporation. All rights reserved.

tyco Electronics	Tyco Electronics Corporation 300 Constitution Drive, Menlo Park, CA. 94025, U.S.A.	Raychem	TITLE: **HEXASHIELD ADAPTOR FOR ARINC 600 CONNECTOR–SIZE 3, 90 Degree BODIES AND TINEL CLAMP NUT**
UNLESS OTHERWISE SPECIFIED DIMENSIONS ARE IN MILLIMETERS. INCH DIMENSIONS ARE SHOWN IN BRACKETS	Tyco Electronics reserves the right to amend this drawing at any time. Users should evaluate the suitability of the product for their application.		DOCUMENT NO. **HEXA6-AY-90-03-AYY-2-YY**

DRAWN :	DATE:	CAGE CODE:	DCR #	File:	SCALE:	SHEET:
IRT	APR 2006	06090	D060137	87008	None	2 OF 4

If this document is printed it becomes uncontrolled. Check for the latest revision.

PART NUMBERING

HEXA6 – A B – 90 – 03 – A36 – 2 – DS

- CONNECTOR CODE NUMBER
  HEXA6 = ARINC 600 CONNECTOR
- MATERIAL CODE:
  A = ALUMINIUM ALLOY
- PLATING CODE:
  B = CADMIUM OLIVE DRAB TO SAE-AMS-QQ-P416
  C = ELECTROLESS NICKEL TO SAE-AMS-MIL-C-26074
- OUTLET STYLE
  90 = 90 DEGREE
- ORDER NUMBER
  03 = SIZE 3 (CAVITIES A, B D AND E)
- FERRULE QUANTITY CODE
- 2 = TINEL CLAMPING NUT
- DS = DRILLED STAR - OPTIONAL - SEE NOTE 1

APPLICATIONS

- These adaptors are designed to be mounted on the following connectors:

ARINC 600 SIZE 3 – Cavities A, B, D and E - Manufactured by Tyco Electronics (AMP), ITT Cannon and Radiall.

- They are qualified to the Raychem specification RB-110

- The adaptor is principally designed for a wire bundle requiring an outer braid termination but can also accept Raychem heat shrink moulded parts over a jacketed cable where strain relief is required – see illustration.

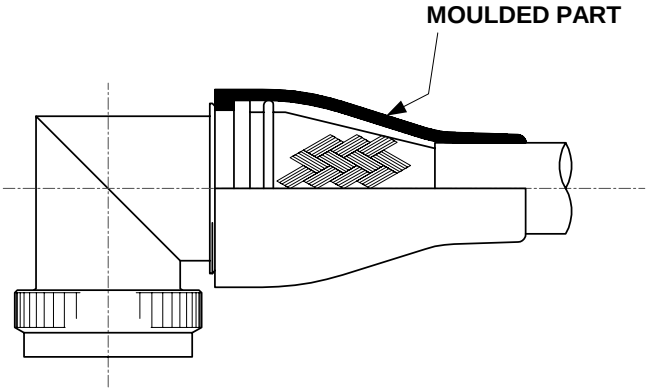

-Use in conjunction with the ferrules HET-A-0XX, which are purchased separately. Refer to individual HET-A-0XX specification control drawing (SCD) for relevant selection details.

INSTALLATION

- See Installation Procedure RPIP-696-02 for assembly
- See Installation Procedure RPIP-696-00 for cable termination

PACKAGING

- All components are supplied in a plastic bag.

© 2006 Tyco Electronics Corporation. All rights reserved.

tyco Electronics	Tyco Electronics Corporation 300 Constitution Drive, Menlo Park, CA. 94025, U.S.A.	Raychem	TITLE: HEXASHIELD ADAPTOR FOR ARINC 600 CONNECTOR–SIZE 3, 90 Degree BODIES AND TINEL CLAMP NUT			
UNLESS OTHERWISE SPECIFIED DIMENSIONS ARE IN MILLIMETERS. INCH DIMENSIONS ARE SHOWN IN BRACKETS		Tyco Electronics reserves the right to amend this drawing at any time. Users should evaluate the suitability of the product for their application.		DOCUMENT NO. HEXA6-AY-90-03-AYY-2-YY		
DRAWN : IRT	DATE: APR 2006	CAGE CODE: 06090	DCR # D060137	File: 87008	SCALE: None	SHEET: 3 OF 4

If this document is printed it becomes uncontrolled. Check for the latest revision.

NOTES!

1. The -DS is for a Drilled Star that is to allow unshielded wires to pass through the assembly.

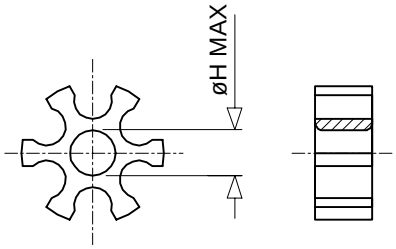

STAR SIZE	21
ØH MAX	12.0 [0.47”]

2. Assembly is to be permanently marked with Code Identity Number and Part Number.
   (e.g. 06090 HEXA6-AC-90-03-A36-2-DS)

© 2006 Tyco Electronics Corporation. All rights reserved.