THIS DRAWING IS UNPUBLISHED. RELEASED FOR PUBLICATION .19 .
© COPYRIGHT 19 BY AMP INCORPORATED. ALL RIGHTS RESERVED.

LOC	DIST
FX	55

REVISIONS

P	LTR	DESCRIPTION	DATE	DWN	APVD
	01	REV PER EC 0K80-0140-03	23MAY2003	RGV	TJV
	02	REV PER EC 0K80-0146-03	30MAY2003	RGV	TJV
	03	REV PER EC 0K80-0409-03	07JAN2004	RGV	TJV

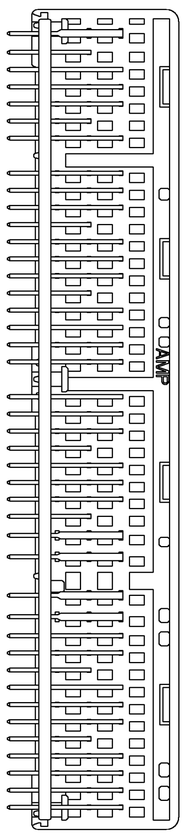

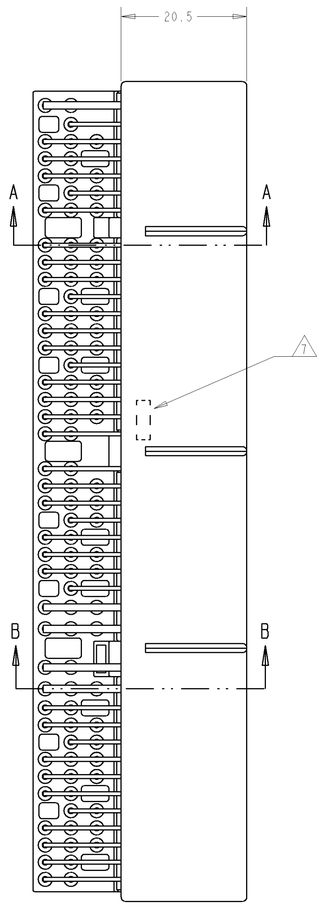

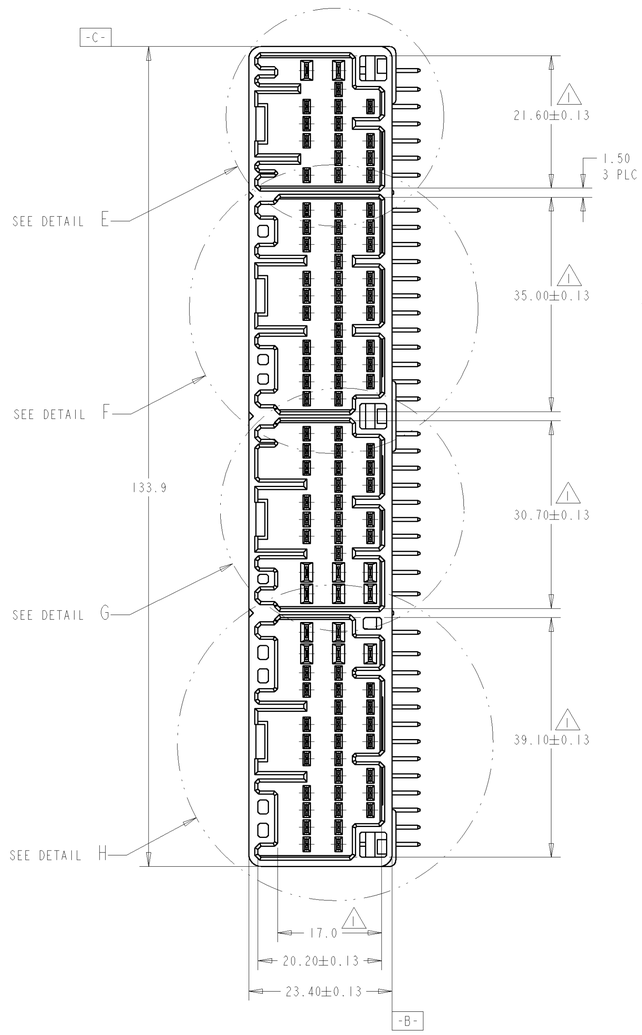

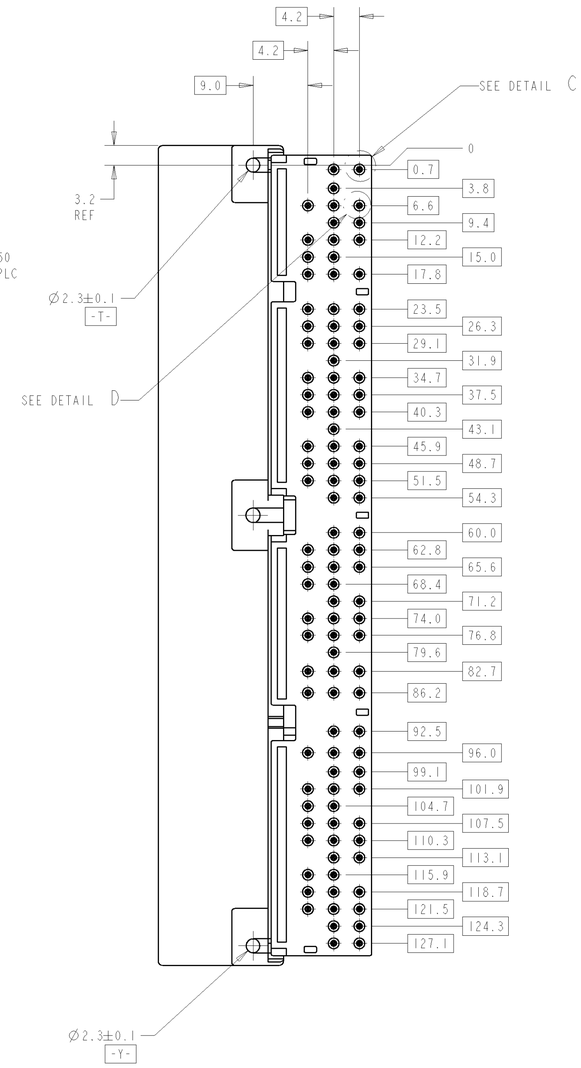

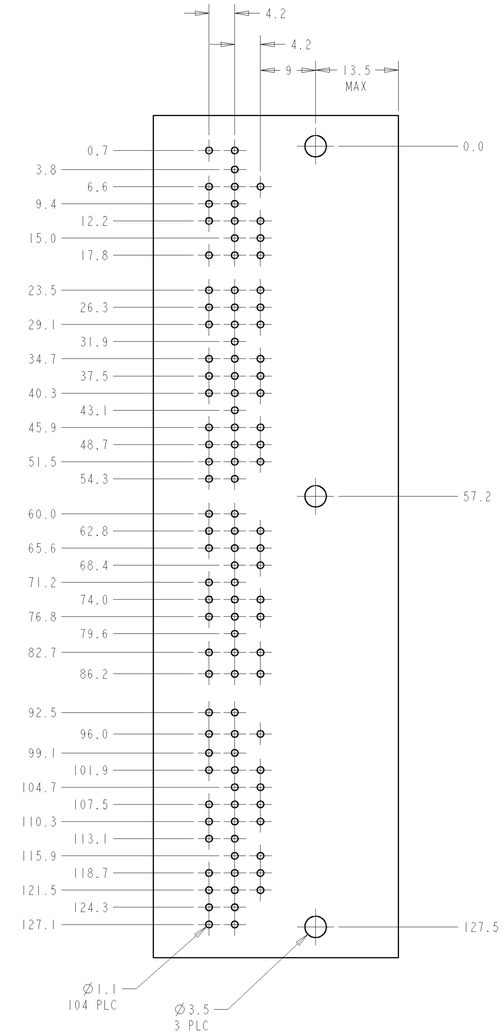

MOUNTING DIMENSIONS FOR PC BOARD

RECOMMENDED TOLERANCES: ±0.1

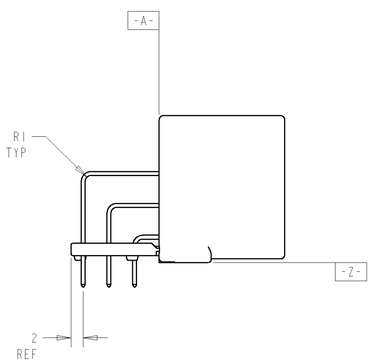

1. MUST BE MEASURED BETWEEN -W- AND 2.00MM
2. MATING PLUG HOUSING PART NUMBERS: 179678, 179679, 179680, 179681
3. RECOMMENDED MOUNTING SCREW: 3MM DIA, 6MM LG MAX. PAN HD, CLASS 2 TAPPING SCREW SPECIFIED IN JIS B1115, B1112 TIGHTENING TORQUE: 0.4Nm (4Kg-cm) MAX.
4. FOR .040 TAB
5. FOR .070 TAB
6. MATING FINISH: .040 TABS - GOLD
   .070 TABS - PREPLATED TIN
7. DATE CODE BY HOT STAMP

HOUSING COLOR	PART NUMBER
GRAY	638170-6

THIS DRAWING IS A CONTROLLED DOCUMENT FOR AMP INCORPORATED. IT IS SUBJECT TO CHANGE AND THE CONTROLLING ENGINEERING ORGANIZATION SHOULD BE CONTACTED FOR THE LATEST REVISION.

DIMENSIONS: mm

TOLERANCES UNLESS OTHERWISE SPECIFIED:
0 PLC ±0.15
1 PLC ±0.15
2 PLC ±0.15
3 PLC ±
4 PLC ±
ANGLES ±1°

MATERIAL: HOUSING: PBT CONTACT: BRASS

FINISH: 6

DWN	JMCNEAL	12OCT98
CHK	RSMITH	12OCT98
APVD	RSMITH	12OCT98
PRODUCT SPEC	108-5441	
APPLICATION SPEC	N/A	
WEIGHT	50.73 GRAMS	

AMP Incorporated
Harrisburg, PA 17105-3608

NAME: ASSY, CAP HOUSING, 104 POSN 040II/070II HD HYBRID I/O CONNECTOR

SIZE: A1 | CAGE CODE: 00779 | DRAWING NO: C-638170

CUSTOMER DRAWING | SCALE 1:1 | SHEET 1 OF 2 | REV 03

AMP 4805 REV 09MA194

Pro/ENGINEER DRAWING

THIS DRAWING IS UNPUBLISHED. RELEASED FOR PUBLICATION .19 .
© COPYRIGHT 19 BY AMP INCORPORATED. ALL RIGHTS RESERVED.

LOC	DIST
FX	55

REVISIONS

P	LTR	DESCRIPTION	DATE	DWN	APVD
	-	SEE SHEET 1	-	-	-

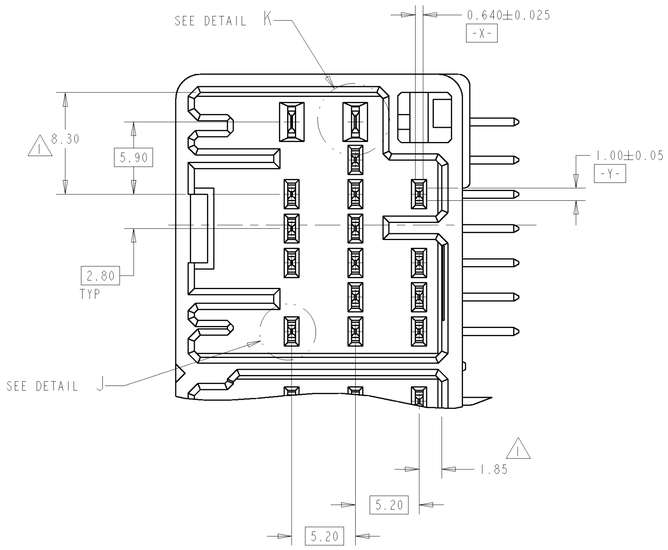

DETAIL E
SCALE 4:1

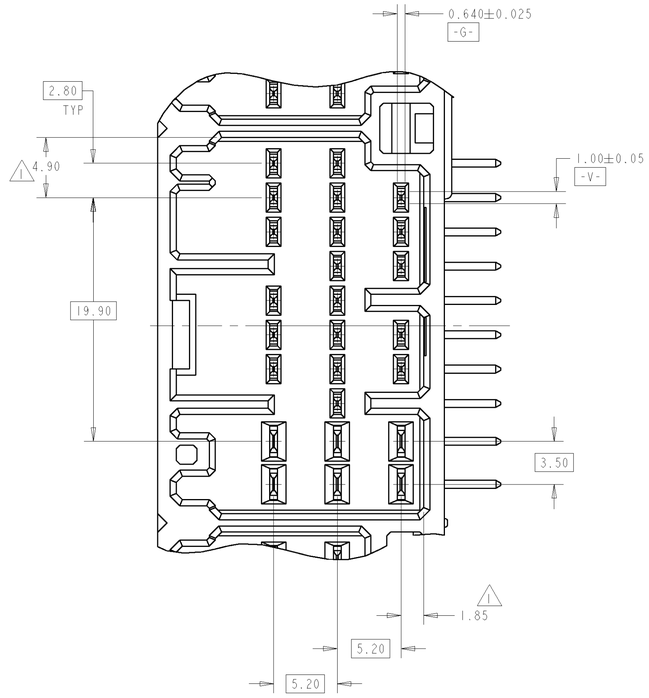

DETAIL G
SCALE 4:1

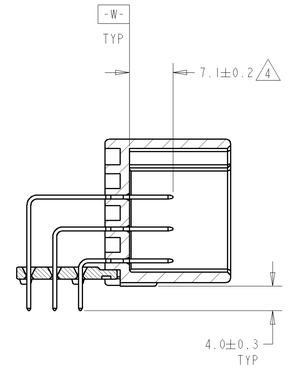

SECTION A-A
SCALE 2:1

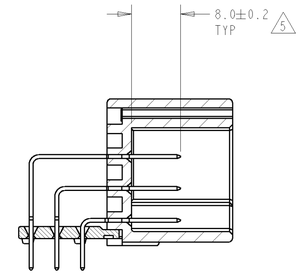

SECTION B-B
SCALE 2:1

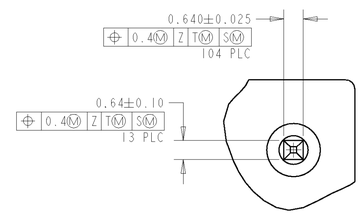

DETAIL C
SCALE 10:1

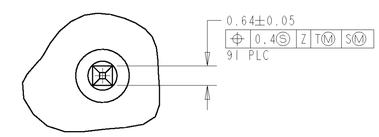

DETAIL D
SCALE 10:1

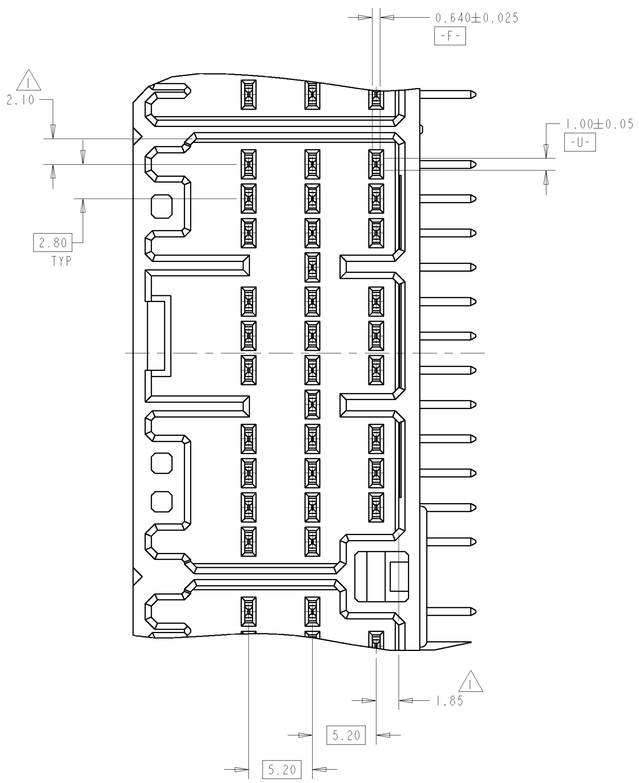

DETAIL F
SCALE 4:1

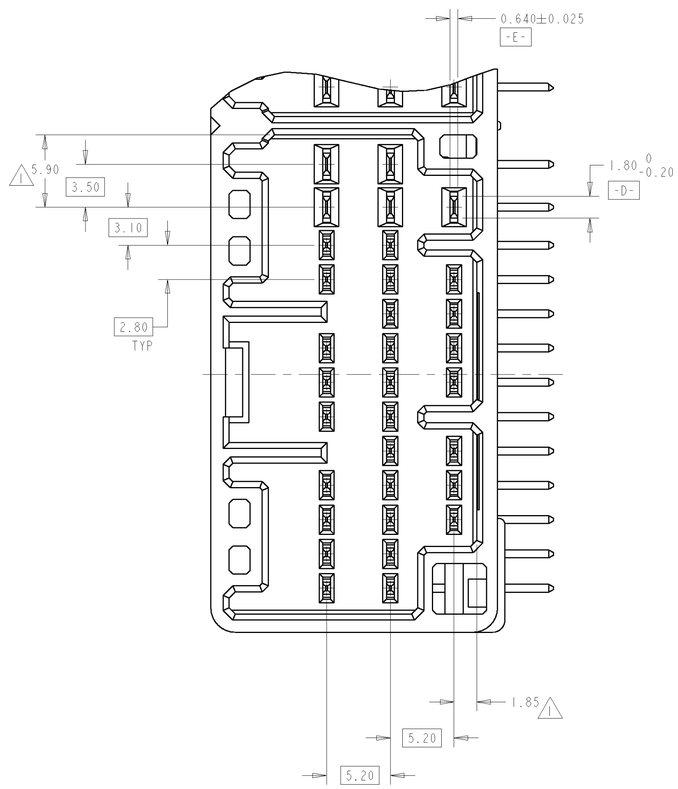

DETAIL H
SCALE 4:1

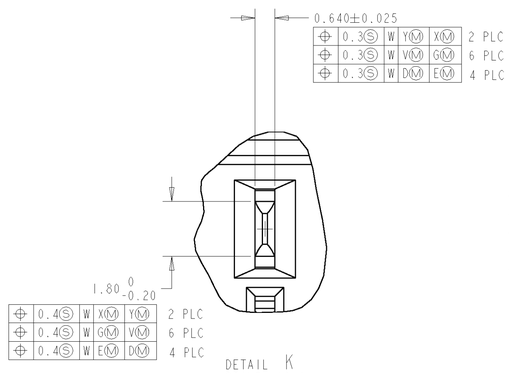

DETAIL K
SCALE 10:1
.070 CONTACTS

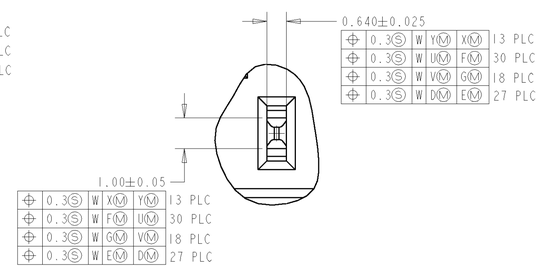

DETAIL J
SCALE 10:1
.040 CONTACTS

THIS DRAWING IS A CONTROLLED DOCUMENT FOR AMP INCORPORATED. IT IS SUBJECT TO CHANGE AND THE CONTROLLING ENGINEERING ORGANIZATION SHOULD BE CONTACTED FOR THE LATEST REVISION.

DIMENSIONS: mm

TOLERANCES UNLESS OTHERWISE SPECIFIED:
0 PLC ±0.15
1 PLC ±0.15
2 PLC ±0.15
3 PLC ±.
4 PLC ±.
ANGLES ±°

MATERIAL -
FINISH -

DWN	JMCNEAL	12OCT98
CHK	RSMITH	12OCT98
APVD	RSMITH	12OCT98

PRODUCT SPEC -
APPLICATION SPEC -
WEIGHT -

AMP Incorporated
Harrisburg, PA 17105-3608

NAME: ASSY, CAP HOUSING, 104 POSN 040111/070111 HD HYBRID I/O CONNECTOR

SIZE	CAGE CODE	DRAWING NO
A1	00779	C-638170

CUSTOMER DRAWING

SCALE	SHEET	REV
1:1	2 OF 2	03