THIS DRAWING IS UNPUBLISHED. RELEASED FOR PUBLICATION
© COPYRIGHT BY TYCO ELECTRONICS CORPORATION. ALL RIGHTS RESERVED.

| LOC | DIST |
|---|---|
| HB | |

REVISIONS

| P | LTR | DESCRIPTION | ECN | DATE | DWN | APVD |
|---|---|---|---|---|---|---|
| | A | RELEASE | | 20-MAR-06 | Y.X | N.F |
| | B | CHANGE UL MARKING AND LOT NUMBER SYSTEM | ECO-07-026191 | 22-FEB-08 | MH.L | BH.Y |
| | C | CHANGE NEW LOGO AND CORRECTION | ECO-08-020477 | 21-FEB-09 | D.L | BH.Y |

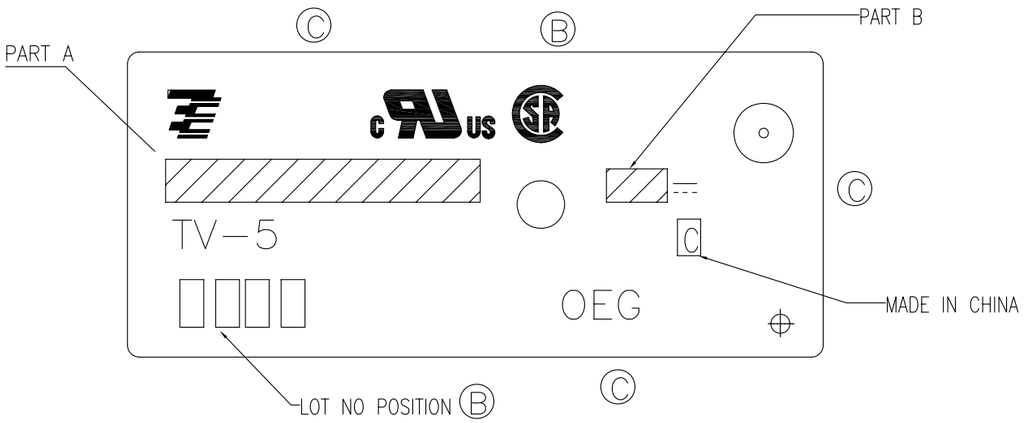


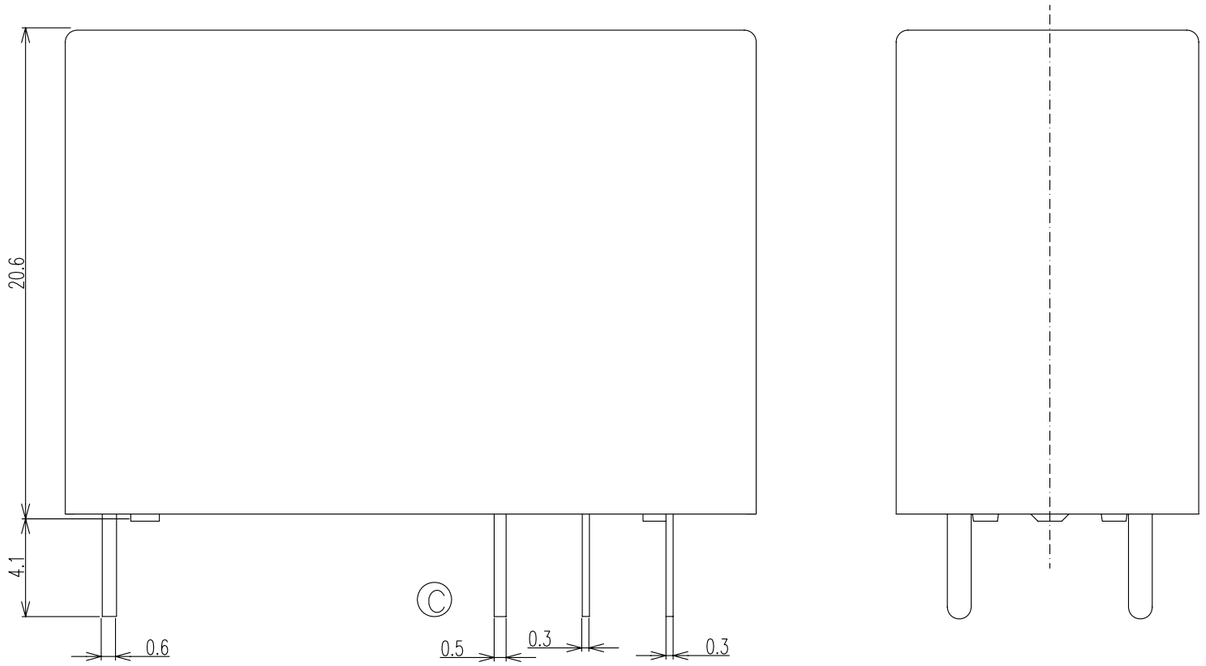


CONNECTION DIAGRAM
(BOTTOM VIEW)

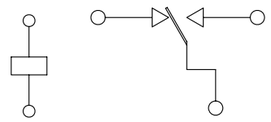

DRILLING DIAGRAM(2/1)
(BOTTOM VIEW)

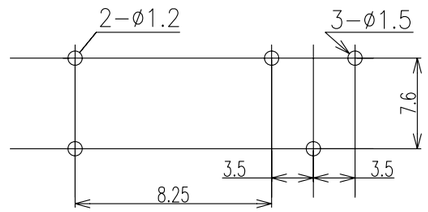


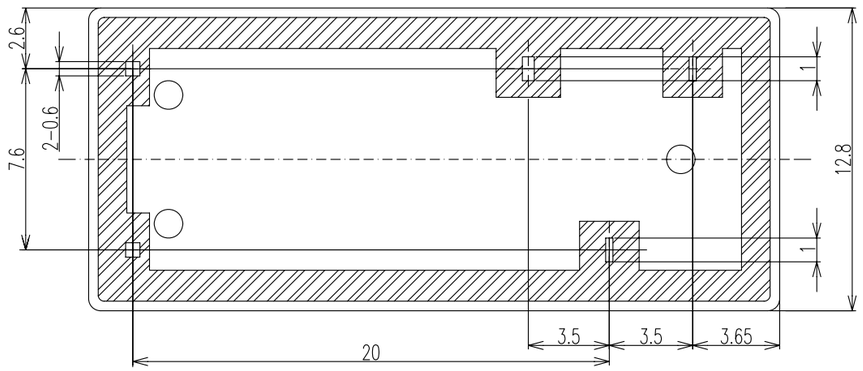


THIS DRAWING IS A CONTROLLED DOCUMENT FOR TYCO ELECTRONICS CORPORATION IT IS SUBJECT TO CHANGE AND THE CONTROLLING ENGINEERING ORGANIZATION SHOULD BE CONTACTED FOR THE LATEST REVISION.

DIMENSIONS: mm

TOLERANCES UNLESS OTHERWISE SPECIFIED:
0 PLC ±
1 PLC ±
2 PLC ±
3 PLC ±
4 PLC ±

MATERIAL: SEE MATERIAL TABLE

FINISH: ——

DWN: Yang.Xiao
CHK: Zhang, xiaoning
APVD: C.H.HSU
PRODUCT SPEC
APPLICATION SPEC
WEIGHT

Tyco Electronics — Tyco Electronics Corporation ShenZhen, China

NAME: OMIT(1T) CUSTOMER DRAWING

| SIZE | GAGE CODE | DRAWING NO | RESTRICTED TO |
|---|---|---|---|
| A3 | 00779 | C- 1440001-3 | |

CUSTOMER DRAWING

| SCALE | SHEET | REV |
|---|---|---|
| 4:1 | 1 OF 2 | C |

THIS DRAWING IS UNPUBLISHED. RELEASED FOR PUBLICATION
© COPYRIGHT BY TYCO ELECTRONICS CORPORATION. ALL RIGHTS RESERVED.

| LOC | DIST |
|---|---|
| HB | |

REVISIONS

| P | LTR | DESCRIPTION | ECN | DATE | DWN | APVD |
|---|---|---|---|---|---|---|
| | | | | | | |

| TE PART NO | PART A | PART B | DESCRIPTION | No. |
|---|---|---|---|---|
| 0-1461208-1 | OMIT-SH-112L | 12V | OMIT-SH-112L | e |
| 0-1440001-3 | OMIT-SS-112L | 12V | OMIT-SS-112L | d |
| 4-1419123-8 | OMIT-SS-112L | 12V | OMIT-SS-112L | c |
| 9-1440000-9 | OMIT-SS-105L | 5V | OMIT-SS-105L | b |
| 9-1440000-8 | OMIT-SS-105L | 5V | OMIT-SS-105L | a |

RELAY TYPE

NOTES:

1.LOT NO. SYSTEM AS FOLLOWING:

0 8 2 5

WEEK

YEAR

2.GENERAL TOLERANCE AS FOLLOWING:

| TOLERANCE | |
|---|---|
| 0~0.99mm | ±0.1 |
| 1mm~2.99mm | ±0.2 |
| 3mm MIN. | ±0.3 |

© 3.TERMINAL DIMENSION IS NOT INCLUDING SOLDER TIP.

| INCOMBUSTIBILITY | TREATMENT | MATERIAL | DESCRIPTION | ITEM |
|---|---|---|---|---|
| | | UV RESIN | UV SEAL | 17 |
| | | EPOXY RESIN | SEAL | 17 |
| | | — | TAPE | 16 |
| UL94 V-0 | | PBT | CASE | 15 |
| CLASS E | | UEW | MAGNETIC WIRE | 14 |
| UL94 V-0 | | PET | BASE | 13 |
| UL94 V-0 | | PBT | BOBBIN | 12 |
| | SOLDER DIP | CP WIRE | COIL TERMINAL | 11 |
| UL94 V-0 | | PPS | CARD | 10 |
| | | Ag ALLOY | MOVABLE CONTACT | 9 |
| | | Ag ALLOY | STATIONARY CONTACT | 8 |
| | | Cu ALLOY | HINGE SPRING | 7 |
| | SOLDER DIP | Cu ALLOY | B TERMINAL | 6 |
| | SOLDER DIP | Cu ALLOY | M TERMINAL | 5 |
| | SOLDER DIP | Cu ALLOY | MOVABLE SPRING | 4 |
| | | STEEL | CORE | 3 |
| | | STEEL | ARMATURE | 2 |
| | | STEEL | YOKE | 1 |

THIS DRAWING IS A CONTROLLED DOCUMENT FOR TYCO ELECTRONICS CORPORATION IT IS SUBJECT TO CHANGE AND THE CONTROLLING ENGINEERING ORGANIZATION SHOULD BE CONTACTED FOR THE LATEST REVISION.

DIMENSIONS: mm

TOLERANCES UNLESS OTHERWISE SPECIFIED:
0 PLC ±
1 PLC ±
2 PLC ±
3 PLC ±
4 PLC ±

MATERIAL: SEE MATERIAL TABLE

FINISH: ——

DWN: Yang.Xiao
CHK: Zhang, xiaoning
APVD: C.H.HSU
PRODUCT SPEC
APPLICATION SPEC
WEIGHT

Tyco Electronics — Tyco Electronics Corporation ShenZhen, China

NAME: OMIT(1T) CUSTOMER DRAWING

SIZE: A3 | GAGE CODE: 00779 | DRAWING NO: C- 1440001-3 | RESTRICTED TO

CUSTOMER DRAWING | SCALE: 4:1 | SHEET: 2 OF 2 | REV: C