THIS DRAWING IS UNPUBLISHED. RELEASED FOR PUBLICATION 20
© COPYRIGHT 20 BY TYCO ELECTRONICS CORPORATION. ALL RIGHTS RESERVED.

LOC	DIST
CE	00

REVISIONS

P	LTR	DESCRIPTION	DATE	DWN	APVD
	W	REV PER 0A00-0067-03	11FEB03	DDE	LS
	Y	REV PER 0A00-0589-03	10MAY04	KG	SB
	Z	REVISE PER 0A00-0051-05	15FEB2005	BB	SB

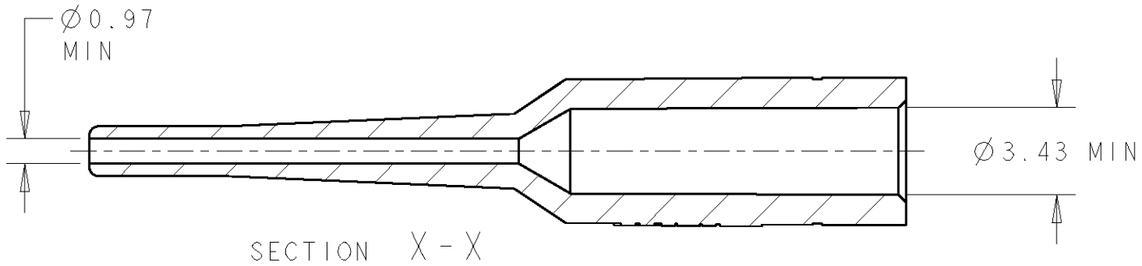

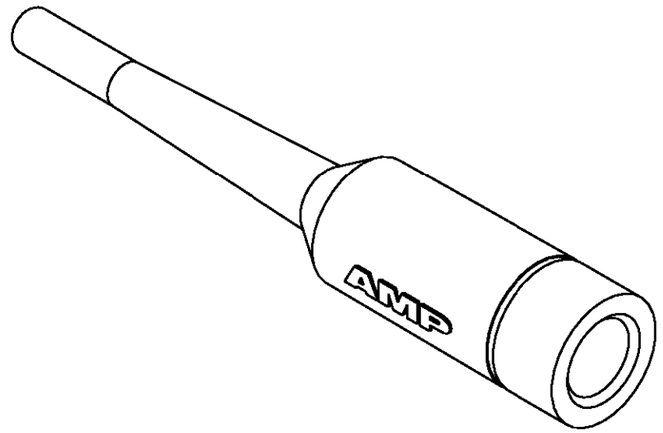

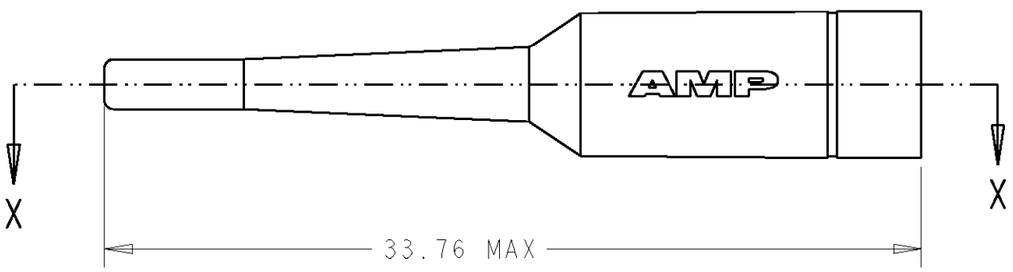

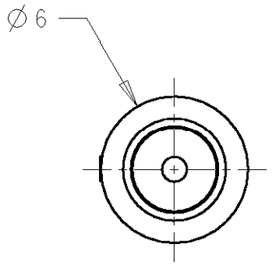

COLOR	PART NUMBER
RED	2-503628-3
BLUE	503628-8
BLACK	503628-1

⚠1 MATERIAL: TPE, UL94 V-0 RATED AT QUALIFYING THICKNESS. SEE DASH NUMBERS FOR COLOR.

THIS DRAWING IS A CONTROLLED DOCUMENT FOR TYCO ELECTRONICS CORPORATION. IT IS SUBJECT TO CHANGE AND THE CONTROLLING ENGINEERING ORGANIZATION SHOULD BE CONTACTED FOR THE LATEST REVISION.

DIMENSIONS: mm

TOLERANCES UNLESS OTHERWISE SPECIFIED:
0 PLC ±-
1 PLC ±-
2 PLC ±0.15
3 PLC ±-
4 PLC ±-
ANGLES ±-

MATERIAL ⚠1 -
FINISH -

DWN D ERDMAN 31AUG94
CHK J MCKEE 31AUG94
APVD J MACKEE 31AUG94
PRODUCT SPEC -
APPLICATION SPEC -
WEIGHT -

AMP Tyco Electronics Harrisburg, PA 17105-3608

NAME BOOT, BARE BUFFER - -

SIZE	CAGE CODE	DRAWING NO	RESTRICTED TO
A3	00779	C-503628	-

CUSTOMER DRAWING | SCALE 4:1 | SHEET 1 OF 1 | REV Z

AMP 1470-19 REV 31MAR2000

Pro/ENGINEER DRAWING