MSD INC. ENGINEERING DATA SHEET

RELAY TYPE: FCA-215-HZ4	COMPUTER PART No.: 9227615	TEST PROCEDURE MSDP- 791
CUST/SPEC CATALOG ITEM -	REV N/A	

TEST REQUIREMENTS

COIL RES: 320 ±10% OHMS OPERATE TIME: 10mS MAX RELEASE TIME: 10 mS MAX

CONTACT MAKE BOUNCE: 1mS MAX N.O. BREAK BOUNCE: 0.1 mS MAX

CONTACT STABILIZATION TIME: N/A RATED COIL VOLTAGE: 28 Vdc

CONTACT RES.: MFG TEST: 8 Milliohms @ 10mA FINAL TEST: 10 Milliohms @ 10mA

CONTACT VOLTAGE DROP: FINAL TEST: 100 mV @ 10 A - 6 Vdc

HI-POT: 1250 Vrms ALL POINTS, EXCEPT 1000 Vrms COIL TO CASE

INSULATION RESISTANCE: 100 MEGOHMS MIN @ 500 Vdc

VIBRATION: N/A

SEAL TEST: 1×10^{-8} MAX LEAK RATE COIL TRANSIENT SUPPRESSION: 42 Vdc MAX

OTHER: * SPECIAL CONTACT GAPS *

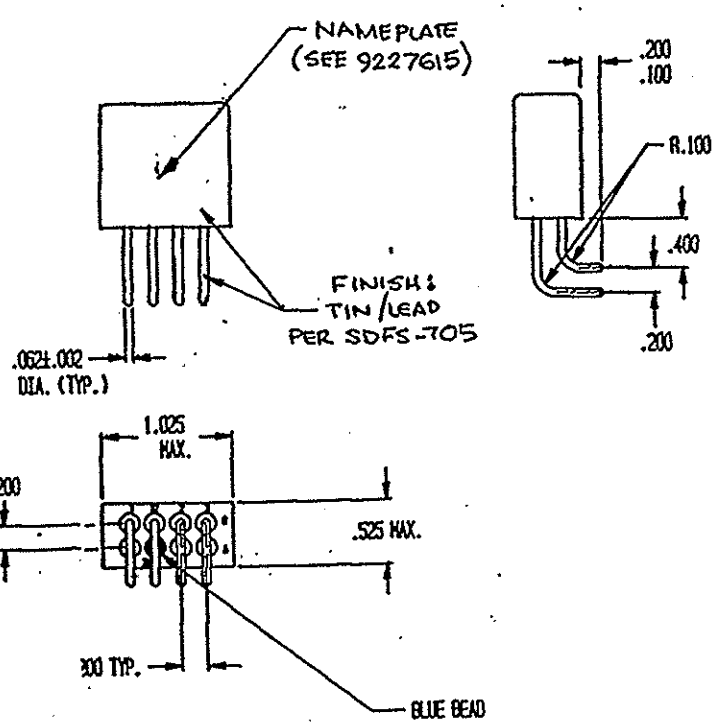

Prepared By: Date	Approved By: Date
LES WYNNE 3-29-96	

Rev	ECN No.	Date
A	96-065	3-29-96

SPECIAL INSTRUCTIONS