Mini MULTILOCK Connectors (Continued)

Seven Position Cap Housing . . . Use With Tab Contact 917309-1

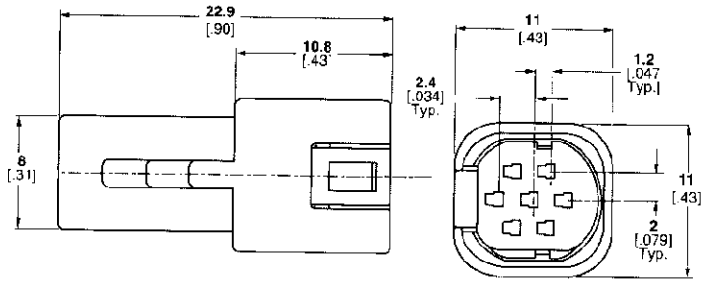

Part Number	Material	Color
917319-4	Glass Filled PBT	Green

Seven Position Plug Housing . . . Use With Receptacle Contact 917308-1

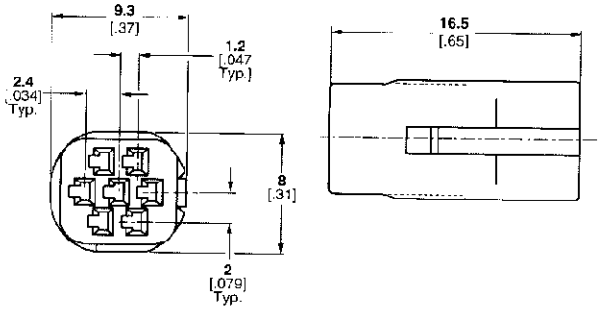

Part Number	Material	Color
917318-4	Glass Filled PBT	Green

Tab Contact (available in strip form only) . . . Use With Cap Housing 917319-4

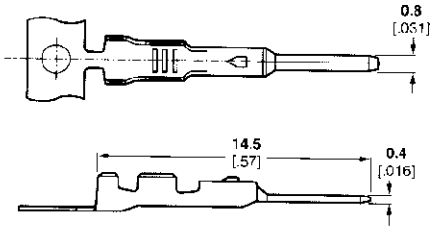

Tab contacts are manufactured from 0.2 [.008] thick materia

Part Number	Wire Range mm²/AWG	Wire Ins. Dia. mm/inches	Material & Finish
917309-1	0.3-0.5 [#22-20]	1.4-1.7 [.055-.067]	Brass Pre-Tin Plated

Receptacle Contact (available in strip form only) . . . Use With Plug Housing 917318-4

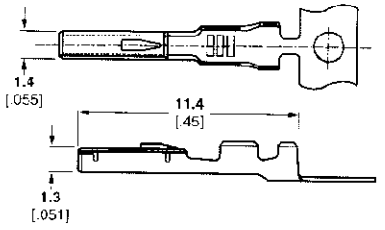

Receptacle contacts are manufactured from 0.2 [.008] thick material.

Part Number	Wire Range mm²/AWG	Wire Ins. Dia. mm/inches	Material & Finish
917308-1	0.3-0.5 [#22-20]	1.4-1.7 [.055-.067]	Phosphor Bronze Pre-Tin Plated

Cavity Plug

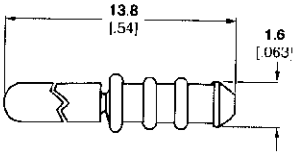

Part Number	Material	Color
316390-7	PBT	Yellow