NOTE

All numerical values are in metric units [with U.S. customary units in brackets]. Dimensions are in millimeters [and inches]. Unless otherwise specified, dimensions have a tolerance of ±0.13 [±.005] and angles have a tolerance of ±2°. Figures and illustrations are for identification only and are not drawn to scale.

1. INTRODUCTION

This specification covers the requirements for application of Miniature AMP–IN Contacts, and Miniature AMP–IN 2000 Contacts. These requirements are applicable to automatic machine crimping tools. The contacts are designed to be inserted into printed circuit (pc) board holes. Figure 1 shows typical product features.

NOTE

The Miniature AMP–IN Contact is designed not as an electrical contact, but as a mechanical holding device to enhance soldering of hookup wires to pc boards.

When corresponding with Tyco Electronics Personnel, use the terminology provided on this specification to help facilitate your inquiry for information. Basic terms and features of components are provided in Figure 1.

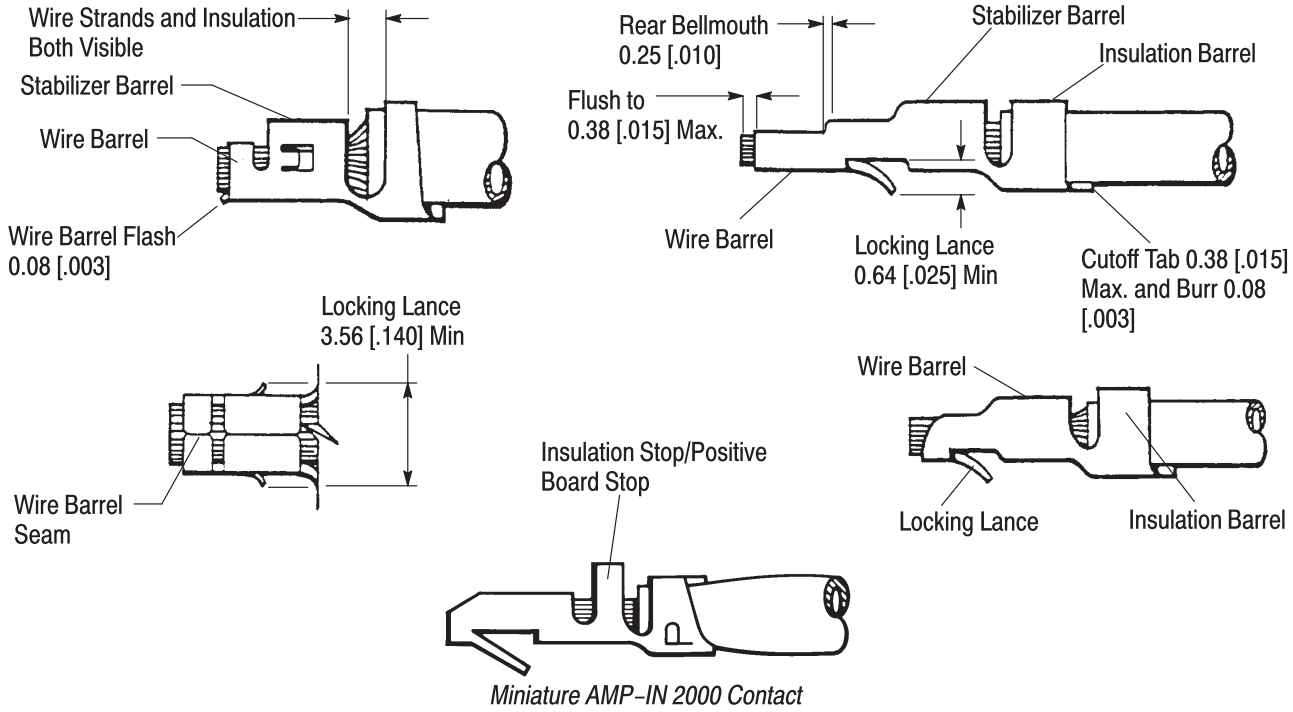

Figure 1

2. REFERENCE MATERIAL

2.1. Revision Summary

This paragraph is reserved for a revision summary covering the most recent additions and changes made to this specification which include the following:

- Updated document to corporate requirements
- Changed strip length dimension in Figure 2

©2008 Tyco Electronics Corporation, Harrisburg, PA
All International Rights Reserved
TE logo and Tyco Electronics are trademarks.
*Trademark. Other products, logos, and company names used are the property of their respective owners.

2.2. Customer Assistance

Reference Part Number 640401 and Product Code 1326 are representative numbers that identify Miniature AMP–IN Contacts. Use of these numbers will identify the product line and expedite your inquiries through a service network established to help you obtain product and tooling information. Such information can be obtained through a local Tyco Electronics Representative or, after purchase, by calling the Tooling Assistance Center or the Product Information number at the bottom of this page.

2.3. Drawings

Customer Drawings for specific products are available from the responsible Tyco Electronics Engineering Department via the service network. The information contained in the Customer Drawings takes priority if there is a conflict with this specification or with any other technical documentation supplied by Tyco Electronics.

2.4. Specifications

Product Specification 108–1081 provides applicable performance requirements for Miniature AMP–IN Contacts.

2.5. Instruction Material

The following Instruction Sheets (408–Series) and Customer Manuals (409–Series) are supporting documents available to assist with product application or tool setup operation.

408–8040	Heavy Duty Miniature Quick–Change Applicators with Mechanical Feed System
408–9640	Crimp Quality Monitor Applicators for Side–Feed and End–Feed Application
409–5128	AMP–O–LECTRIC* Model “K” Terminating Machine
409–5842	AMP–O–LECTRIC Model “G” Terminating Machine
409–5866	AMPOMATOR* CLS IV Machine

2.6. Manuals

Manual 402–40 is available from the service network. This manual provides information on various flux types and characteristics along with the commercial designation and flux removal procedures. A checklist is included in the manual as a guide for information on soldering problems.

3. REQUIREMENTS

3.1. Wire Preparation

A. Wire Size

The contacts will accept wires from 10 to 26 AWG.

B. Wire Insulation Diameter

Wire insulation diameter shall have minimum and maximum dimensions according to the wire sizes indicated in Figure 2.

C. Wire Strip Length

Wire strip length shall be as indicated in Figure 2.

D. Workmanship

Care shall be taken during the stripping operation to ensure the conductor is not nicked, scraped, or cut.

3.2. Crimped Contact

A. Crimping Requirements

Contacts shall be crimped in accordance with the specifications listed in Figure 2.

CAUTION

Care shall be taken to ensure that the wire insulation is not cut or broken during the crimping operation and ensure that the insulation is not crimped into the stabilizer or wire barrel.

MINIATURE AMP–IN CONTACT NUMBERS	WIRE			WIRE BARREL		STABILIZER BARREL		INSUL BARREL CRIMP WIDTH
	SIZE (AWG)	INSUL DIA	STRIP LENGTH ±0.38 [.015]	CRIMP HEIGHT ±0.05 [.002]	CRIMP WIDTH	CRIMP HEIGHT	CRIMP WIDTH	
640311	22 20 18	1.52 [.060] to 2.79 [.110]	4.83 [.190]	0.76 [.030] 0.76 [.030] 0.94 [.037]	1.57 [.062]	1.40 ±0.05 [.055 ±.002]	1.57 [.062]	2.79 [.110]
640401	26 24 22	1.02 [.040] to 2.54 [.100]	4.83 [.190]	0.74 [.029] 0.74 [.029] 0.89 [.035]	1.07 [.042]	1.02 ±0.05 [.040 ±.002]	1.07 [.042]	2.79 [.110]
770060	18 16 14	2.29 [.090] to 3.81 [.150]	5.21 [.205]	1.09 [.043] 1.09 [.043] 1.40 [.055]	2.79 [.110]	2.79 +0.13/–0.00 [.110 +.005/–.000]	2.79 +0.13/–0.00 [.110 +.005/–.000]	3.94 [.155]
640663	26 24 22	1.02 [.040] to 1.78 [.070]	4.51 [.178]	0.81 [.032] 0.86 [.034] 0.96 [.038]	1.07 [.042]	– –	– –	1.78 [.070]
640108	26 24 22	1.52 [.060] to 2.54 [.100]	4.51 [.178]	0.81 [.032] 0.86 [.034] 0.96 [.038]	1.07 [.042]	– –	– –	2.79 [.110]
350566	22 20 18	1.52 [.060] to 2.79 [.110]	4.51 [.178]	1.07 [.042]	1.57 [.062]	– –	– –	2.79 [.110]
770565	22 20 18	1.52 [.060] to 2.79 [.110]	3.81 [.150]	0.81 [.032] 0.91 [.036] 1.07 [.042]	1.57 [.062]	– –	– –	2.79 [.110]
794037	12 10	5.08 [.200] Max.	5.21 [.205]	2.41 [.095] 2.74 [.108]	2.79 [.110] 3.56 [.140]	2.79 ±0.05 [.110 ±.002]	2.79 [.110] 3.56 [.140]	5.33 [.210]
794013	12	2.29 [.090] to 3.81 [.150]	5.21 [.205]	2.16 [.085]	2.79 [.110]	2.79 ±0.05 [.110 ±.002]	2.79 [.110]	3.94 [.155]

MINIATURE AMP–IN 2000 CONTACT NUMBERS	WIRE			WIRE BARREL		STABILIZER BARREL		INSUL BARREL CRIMP WIDTH
	SIZE (AWG)	INSUL DIA	STRIP LENGTH ±0.38 [.015]	CRIMP HEIGHT ±0.076 [.003]	CRIMP WIDTH	CRIMP HEIGHT	CRIMP WIDTH	
794121	22 20 18	1.27 [.050] to 2.79 [.110]	5.08 [.200]	0.76 [.030] 0.86 [.034] 0.91 [.036]	1.57 [.062]	– –	– –	3.30 [.130]
794122	26 24 22	1.27 [.050] to 2.79 [.110]	5.08 [.200]	0.71 [.028] 0.79 [.031] 0.86 [.034]	1.07 [.042]	– –	– –	3.30 [.130]

Figure 2

B. Wire Barrel Crimp Configuration

The following additional requirements shall apply to the completed wire barrel crimp. See Figure 1.

1. Wire Barrel Seam
   Wire barrel seam shall be completely closed with no wire strands loose or visible in the seam.
2. Rear Bellmouth
   Rear bellmouth length shall be a maximum of 0.25 mm [.010 in.].
3. Wire Barrel Flash
   Wire barrel flash shall be a maximum of 0.08 mm [.003 in.].

C. Stabilizer Barrel

A stabilizer barrel seam opening is acceptable with 10 and 12 AWG wire.

D. Insulation Stop/Positive Board Stop

The Insulation Stop/Positive Board Stop is not terminated, it will remain in the open U–shape.

E. Crimp Location

Conductor end shall be flush with the front end of the wire barrel or extend past the end of the wire barrel a maximum of 0.38 mm [.015 in.].

Insulation should not be crimped into the stabilizer barrel.

Miniature AMP–IN Contacts, insulation and conductor should be visible between the insulation barrel and the wire or stabilizer barrel. Mini AMP–IN 2000 Contacts, the insulation and conductor should be visible between the insulation barrel and insulation stop.

F. Carrier Cutoff Tab And Burr

The carrier strip cutoff tab shall have a maximum length of 0.38 mm [.015 in.], and the burr on the cutoff tab shall be a maximum of 0.08 mm [.003 in.].

G. Locking Lance

Locking lance(s) on bottom or sides of contacts shall be within limits shown in Figure 1.

3.3. Printed Circuit (PC) Boards

Depending on the contact being used, the pc board hole sizes should be within the tolerances specified in Figure 3.

CONTACT PART NUMBER	WIRE SIZE (AWG)	PRINTED CIRCUIT BOARD HOLE SIZE
640311	22–18	1.85 ±0.10 [.073 ±.004]
640401	26–22	1.40 ±0.10 [.055 ±.004]
770060	18–14	3.18 ±0.08 [.125 ±.003]
640663	26–22	1.40 ±0.10 [.055 ±.004]
640108	26–22	1.40 ±0.10 [.055 ±.004]
350566	22–18	1.85 ±0.10 [.073 ±.004]
770565	22–18	1.83 ±0.08 [.072 ±.003]
794037	12 10	3.18 ±0.08 [.125 ±.003] 3.68 ±0.08 [.145 ±.003]
794013	12	3.18 ±0.08 [.125 ±.003]
794121	22–20 18	1.83 ±0.08 [.072 ±.003] 1.96 ±0.08 [.077 ±.003]
794122	26–22	1.40 ±0.10 [.055 ±.004]

Figure 3

3.4. Soldering

NOTE

Manual 402–40 provides guidelines for establishing soldering practices.

Miniature AMP–IN Contacts can be soldered using wave, vapor phase, or infrared reflow processes, provided the temperatures and exposure time are within the ranges specified in Figure 4.

SOLDERING PROCESS	TEMPERATURE		TIME (At Max Temp)
	CELSIUS	FAHRENHEIT	
WAVE SOLDERING	260●	500●	5 Seconds
VAPOR PHASE SOLDERING	215	419	5 Minutes
INFRARED REFLOW SOLDERING	230	446	5 Minutes

● Wave Temperature

Figure 4

A. Flux Selection

The wire barrels must be fluxed prior to soldering with a rosin base flux. Selection of the flux will depend on the type of printed circuit board and other components mounted on the board. Additionally, the flux must be compatible with the wave solder line, manufacturing, and safety requirements. Some fluxes that are compatible with these connectors are provided in Figure 5. Call the Product Information number at the bottom of page 1 for consideration of other types of flux.

FLUX TYPE	ACTIVITY	RESIDUE	COMMERCIAL DESIGNATION	
			KESTER▲	ALPHA⊞
Type RMA (Mildly Activated)	Mild	Noncorrosive	185/197	611
Center (Activated)	Medium	May be Corrosive	1544, 1545, 1547	711, 809, 811

▲Trademark of MacDonald & Co. ⊞ Designation of Alpha Metals Inc.

Figure 5

B. Cleaning

After soldering, removal of fluxes and activators is necessary. Consult the supplier of the solder and flux for recommended cleaners. Common organic and aqueous cleaners that these connectors can be exposed to for a period of 5 minutes at 40.5°C [105°F] with no harmful effect are provided in Figure 6.

Cleaners must be free of dissolved flux and other contaminants. We recommend cleaning with the pc board on its edge. If using an aqueous cleaner, we recommend standard equipment such as a soak–tank or an automatic in–line machine.

DANGER

Consideration must be given to toxicity and other safety and health requirements as recommended in the Material Safety Data Sheet (MSDS) supplied by the solvent manufacturer.

CLEANER		TIME (Minutes)	TEMPERATURES (Maximum)	
NAME	TYPE		CELSIUS	FAHRENHEIT
Alpha 2110■	Aqueous	1	132	270
Bioact EC–7◆	Solvent	5	100	212
Butyl Carbitol●	Solvent	1	Room Ambient	
Isopropyl Alcohol	Solvent	5	100	212
Kester 5778⁘	Aqueous	5	100	212
Kester 5779⁘	Aqueous	5	100	212
Loncoterge 520●	Aqueous	5	100	212
Loncoterge 530●	Aqueous	5	100	212
Terpene Solvent	Solvent	5	100	212

■ Product of Fry's Metals, Inc. ◆ Product of Petroferm, Inc. ● Product of Union Carbide Corp. ⁘ Product of Litton Systems, Inc.

Figure 6

C. Drying

Air drying of cleaned connectors is recommended. Temperature for the connectors should not exceed –55 to 105°C [–67 to 221°F]. Degradation of the housings could result from extreme temperatures.

4. QUALIFICATIONS

Miniature AMP–IN Contacts are not required to be agency approved.

5. TOOLING (Figure 7)

Applicators are available for the full wire and insulation range of the Miniature AMP–IN Contacts. There are applicators for the automatic wire feed AMPOMATOR CLS IV Lead Making Machine 217500–1 and for the hand feed bench machine AMP–O–LECTRIC Model G Terminating Machine 354500–1.

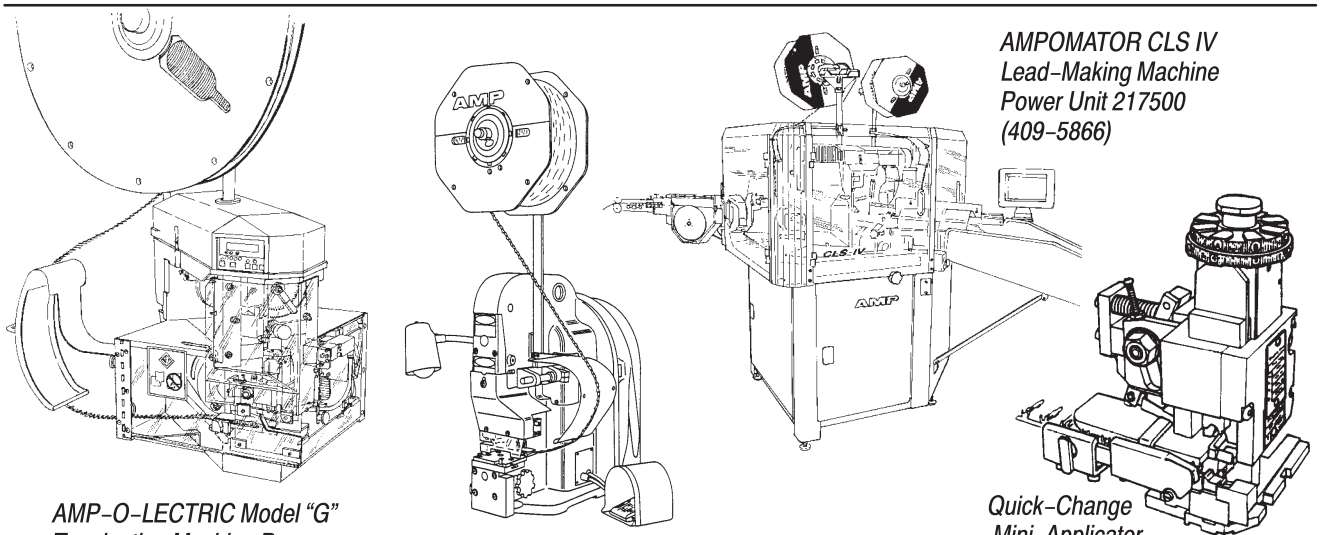

WIRE		POWER UNITS AND QUICK–CHANGE MINI–APPLICATOR			
RANGE (AWG)	INSULATION DIAMETER	AMPOMATOR CLS IV LEAD MAKING MACH	AMP–O–LECTRIC MODEL "G"	AMP–O–LECTRIC MODEL "K"	STRIPPER CRIMPER APPLICATOR
26–22	1.02–1.78 [.040–.070]	466739–1	466739–4	466739–3	466991–1
	1.02–2.54 [.040–.100]	466676–3	– –	466676–4	– –
	■■1.27–2.79 [.050–.110]	680423–1	680423–3	680423–2	– –
	1.52–2.54 [.060–.100]	466062–1	– –	466062–6	– –
22–18	■■1.27–2.79 [.050–.110]	680422–1	680422–3	680422–2	– –
	1.52–2.79 [.060–.110]	567336–1	– –	567336–2	567840–1
	1.52–2.79 [.060–.110]	687911–1	687911–8	687911–7	567924–1
	1.52–2.79 [.060–.110]	466648–3	– –	466648–4	– –
18–14	2.29–3.81 [.090–.150]	567183–8	– –	567183–7	567923–1
12	2.29–3.81 [.090–.150]	567183–8	– –	567183–7	567923–1
12–10	5.08 [.200] MAX	680078–1	680078–3	680078–2 680078–4	– –

■■Range (AWG) and tooling information for Miniature AMP–IN 2000 Contacts

Figure 7

6. VISUAL AID

Figure 8 shows typical applications of Miniature AMP–IN Contacts. This illustration should be used by production personnel to ensure a correctly applied product. Applications which DO NOT appear correct should be inspected using the information in the preceding pages of this specification and in the instructional material shipped with the product or tooling.

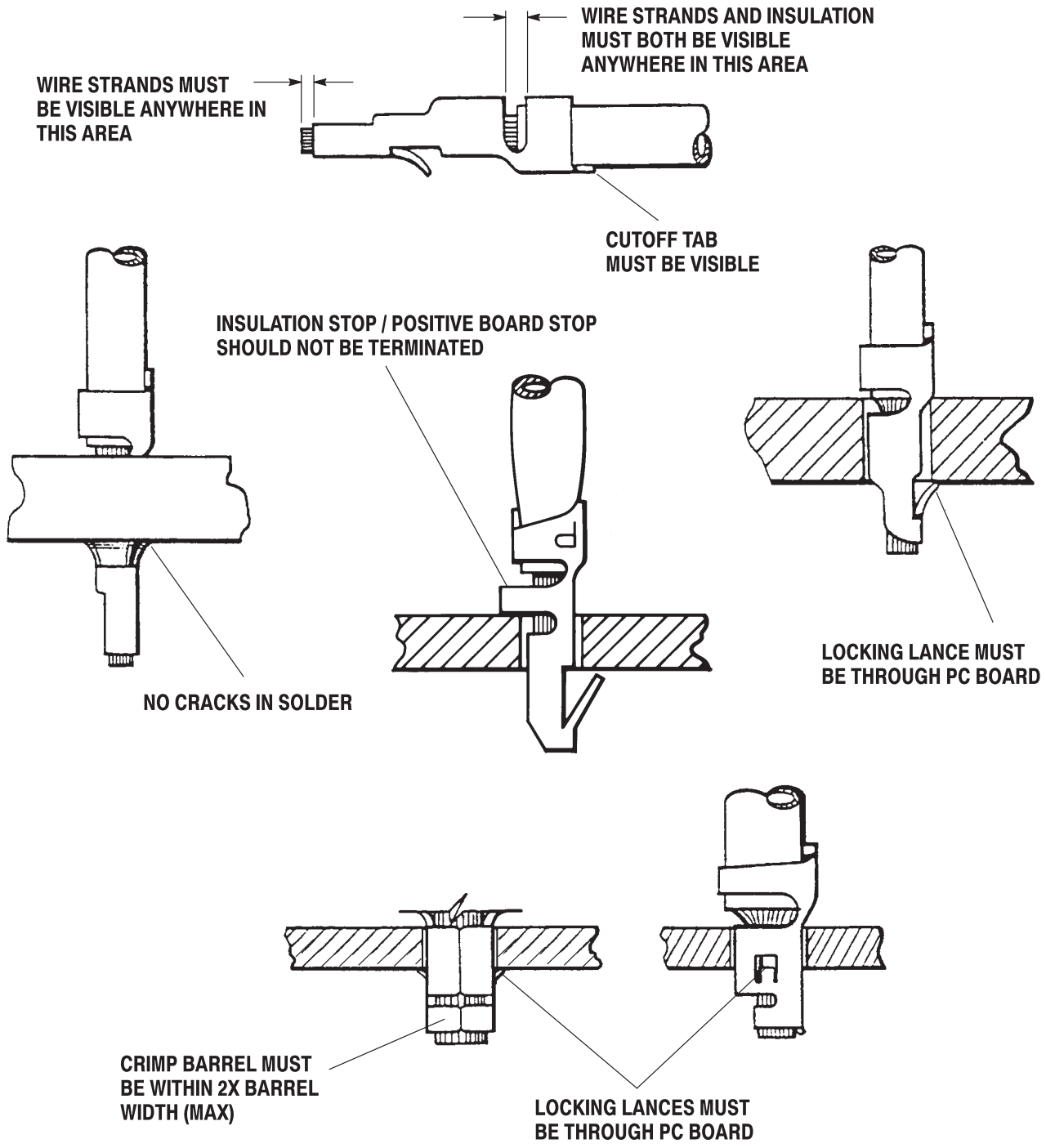

FIGURE 8. VISUAL AID