THIS DRAWING IS UNPUBLISHED. RELEASED FOR PUBLICATION -,- .
© COPYRIGHT - BY TYCO ELECTRONICS CORPORATION. ALL RIGHTS RESERVED.

LOC	DIST
AA	00

REVISIONS

P	LTR	DESCRIPTION	DATE	DWN	APVD
	D	ECO-08-004638	25FEB2008	LAM	PR

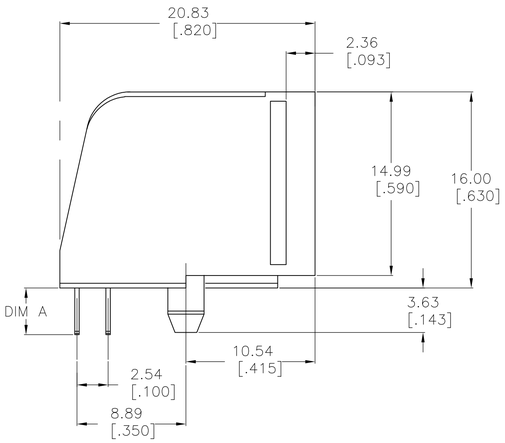

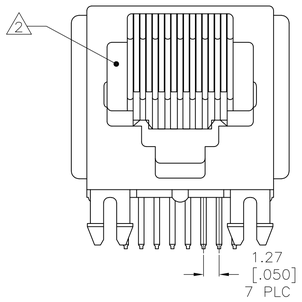

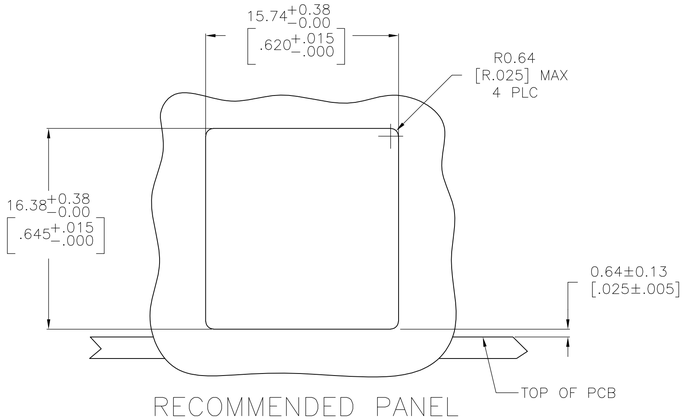

RECOMMENDED PANEL CUTOUT

1. MATERIAL: HOUSING – PBT POLYESTER, BLACK.
   TERMINAL – PHOS-BRONZE PLATED WITH .000050 [1.27μm] THICK HARD GOLD IN LOCALIZED GOLD PLATE AREA AND .000080 [2.03 μm] MIN THICK MATTE TIN IN SOLDER AREA OVER .000050 [1.27 μm] MIN THICK NICKEL UNDERPLATE.

2. CAVITY CONFORMS TO FCC RULES AND REGULATIONS PART 68 AND REA BULLETIN 345-81, PE-76 SPECIFICATION FOR MODULAR TELEPHONE HARDWARE.

3. BULK PACKAGED IN A TRAY.

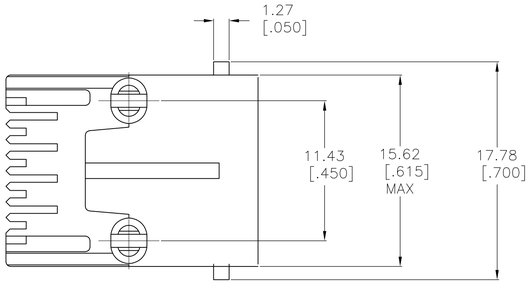

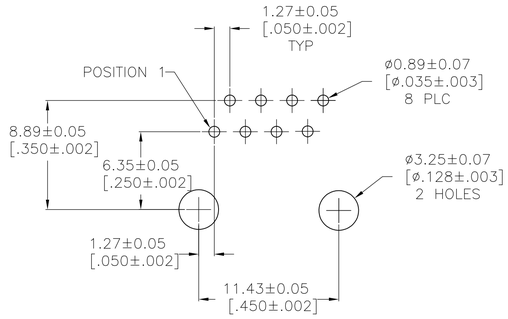

RECOMMENDED PRINTED CIRCUIT BOARD LAYOUT
COMPONENT SIDE SHOWN

SUPERSEDED BY 5520251-4	.10-.12[2.54-3.05]	3	8	5520251-9
	.13-.17[3.30-4.32]	3	8	5520251-4
	DIM A	PACKAGED	TERMINALS	PART NUMBER

THIS DRAWING IS A CONTROLLED DOCUMENT.

DIMENSIONS: mm [INCHES]

TOLERANCES UNLESS OTHERWISE SPECIFIED:
0 PLC ± –
1 PLC ± –
2 PLC ± –
3 PLC ± .005[.013]
4 PLC ± –
ANGLES ± –

MATERIAL: SEE NOTE 1
FINISH: SEE NOTE 1

DWN: G. GARRETT/L.A.MAYER 08JUNE2005
CHK: J.WESTMAN 5-23-95
APVD: S.FLICKINGER 08JUNE2005
PRODUCT SPEC: 108-1163
APPLICATION SPEC: 114-2048
WEIGHT: –

Tyco Electronics
Tyco Electronics Corporation
Harrisburg, PA 17105-3608

NAME: MODULAR JACK ASSEMBLY,SIDE ENTRY, 8 POSITION, FLANGELESS, WITH PANEL STOPS

SIZE	CAGE CODE	DRAWING NO	RESTRICTED TO
A1	00779	C-5520251	–

CUSTOMER DRAWING | SCALE 4:1 | SHEET 1 OF 1 | REV D