THIS DRAWING IS UNPUBLISHED. RELEASED FOR PUBLICATION -,- .
© COPYRIGHT – BY TYCO ELECTRONICS CORPORATION. ALL RIGHTS RESERVED.

LOC	DIST
AD	00

REVISIONS

P	LTR	DESCRIPTION	DATE	DWN	APVD
	A	REVISED PER ECO-05-004358	12-1-05	HMR	–

MATERIALS

COMPONENT NAME	BASE MATERIAL	FINISH
CASE	LCP, BLACK, UL94 V-0	
TERMINAL, WIRE LUG (GOLD)	BRASS	GOLD OVER NICKEL
TERMINAL, PC & RA (GOLD)	BRASS	GOLD OVER NICKEL IN CONTACT AREA, TIN OVER NICKEL IN SOLDER AREA
TERMINAL, WIRE LUG & PC (SILVER)	SILVER CLAD COPPER	SILVER OVER NICKEL
CONTACT (GOLD)	COPPER ALLOY OR BRASS	GOLD OVER NICKEL
CONTACT (SILVER)	SILVER CLAD COPPER OR COPPER	SILVER OVER NICKEL
FRAME	STEEL	TIN OVER COPPER
SPRING	MUSIC WIRE	
PLUNGER BUTTON	NYLON 6/6, BLACK, RED OR BLUE, UL94 HB	
GUIDE, CC & FF SWITCHES ONLY	NYLON 6/6, WHITE	

PART NUMBER MATRIX

MODEL	POLES	RATING	FUNCTION	PLATING	TERMINATIONS	BUTTON COLOR	04
TP	1	1=GOLD .4VA	C=SPST MOMENTARY	G=GOLD	BLANK=WIRE LUG	0=BLACK	
	2(1+1)	3=SILVER 1 AMP [1]	F=SPDT MOMENTARY	BLANK=SILVER [1]	PC=PRINTED CIRCUIT	2=RED	
					RA=RIGHT ANGLE [1]	6=BLUE	

NOTES:
1. SILVER ONLY AVAILABLE IN WIRE LUG AND PC TERMINATIONS

SPECIFICATIONS

RATING	GOLD: .4VA MAX. @ 20VDC OR PEAK AC RESISITIVE
	SILVER: 1A @ 125VAC OR 28 VDC RESISTIVE
INITIAL TERMINATION RESISTANCE	20 MILLIOHMS MAX.
INSULATION RESISTANCE	1,000 MEGOHMS MIN @ 500 VDC
DIELECTRIC STRENGTH	1,000 VOLTS RMS AT SEA LEVEL
TIMING	BREAK BEFORE MAKE
PLUNGER TRAVEL	.030
ACTUATION FORCE	50 TO 400 GRAMS
LIFE EXPECTANCY	.4VA: 100,000
	1A: 60,000
OPERATING TEMPERATURE	-30°C TO +95°C
STORAGE TEMPERATURE	-30°C TO +95°C
TERMINAL SEAL	SINGLE POLE: EPOXY
	DOUBLE POLE: EPOXY OPTIONAL

TYCO P/N	ALCO P/N	POLES	THROWS	PLATING	TERMINALS	BUTTON COLOR	FUNCTION		CONNECTED TERMINALS	
							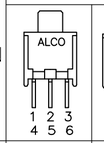	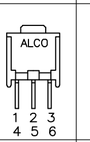	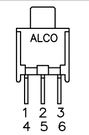	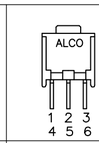
1825095-1	TP11CGPC004	1	1	GOLD	PC	BLACK	OFF	MOM	OFF	1-3
1825095-2	TP11CGPC204	1	1	GOLD	PC	RED	OFF	MOM	OFF	1-3
1825095-3	TP11CGRA004	1	1	GOLD	RIGHT ANGLE	BLACK	OFF	MOM	OFF	1-3
1825095-4	TP11CGRA204	1	1	GOLD	RIGHT ANGLE	RED	OFF	MOM	OFF	1-3
1825095-5	TP11CGRA604	1	1	GOLD	RIGHT ANGLE	BLUE	OFF	MOM	OFF	1-3
1825095-6	TP11FGPC004	1	2	GOLD	PC	BLACK	ON	MOM	1-2	2-3
1825095-7	TP11FGPC204	1	2	GOLD	PC	RED	ON	MOM	1-2	2-3
1825095-8	TP11FGRA004	1	2	GOLD	RIGHT ANGLE	BLACK	ON	MOM	1-2	2-3
1825095-9	TP11FGRA204	1	2	GOLD	RIGHT ANGLE	RED	ON	MOM	1-2	2-3
1-1825095-0	TP11FGRA604	1	2	GOLD	RIGHT ANGLE	BLUE	ON	MOM	1-2	2-3
1-1825095-1	TP21CCGRA004	2(1+1)	1	GOLD	RIGHT ANGLE	BLACK	OFF	MOM	OFF	1-3
1-1825095-2	TP21CCGRA204	2(1+1)	1	GOLD	RIGHT ANGLE	RED	OFF	MOM	OFF	1-3
1-1825095-3	TP21FFGRA004	2(1+1)	2	GOLD	RIGHT ANGLE	BLACK	ON	MOM	1-2	2-3

1825095

NOTES:

1. TERMINAL NUMBERS ARE FOR REFERNCE ONLY AND DO NOT APPEAR ON SWITCHES
2. ALL MATERIALS AND FINISHES COMPLY WITH EU DIRECTIVE 2002/95/ES OF 27JAN2003 (ROHS)

3 CENTER TERMINAL PRESENT ON DOUBLE THROW SWITCHES ONLY.

THIS DRAWING IS A CONTROLLED DOCUMENT.

DIMENSIONS: INCHES

TOLERANCES UNLESS OTHERWISE SPECIFIED:
0 PLC ± –
1 PLC ± –
2 PLC ± –
3 PLC ± .010
4 PLC ± –
ANGLES ± 3°

MATERIAL –

FINISH –

DWN RAGHU 12-1-05
CHK –
APVD –
PRODUCT SPEC –
APPLICATION SPEC –
WEIGHT –

Tyco Electronics Corporation
Harrisburg, Pa 17105-3608

NAME PUSHBUTTON SWITCH, TP SERIES

SIZE	CAGE CODE	DRAWING NO	RESTRICTED TO
A2	00779	C-1825095	–

CUSTOMER DRAWING | SCALE 4:1 | SHEET 1 OF 3 | REV A

THIS DRAWING IS UNPUBLISHED. RELEASED FOR PUBLICATION -,- .
© COPYRIGHT - BY TYCO ELECTRONICS CORPORATION. ALL RIGHTS RESERVED.

LOC	DIST
AD	00

REVISIONS

P	LTR	DESCRIPTION	DATE	DWN	APVD
	—	SEE SHEET 1	–	—	—

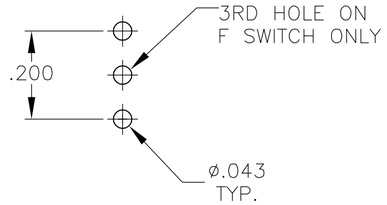

RECOMMENDED HOLE LAYOUT

TOLERANCE ±.002 UNLESS
OTHERWISE NOTED

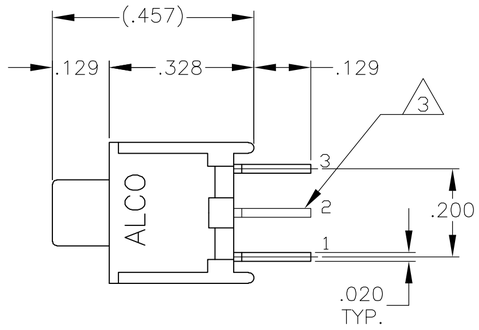

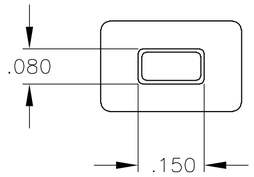

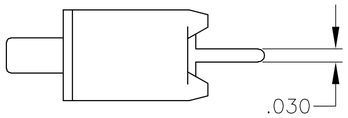

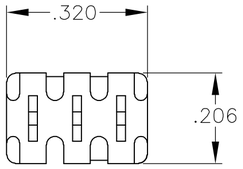

TP11CGPC
TP11FGPC

1825095

THIS DRAWING IS A CONTROLLED DOCUMENT.

DIMENSIONS: INCHES

TOLERANCES UNLESS OTHERWISE SPECIFIED:

0 PLC	±	–
1 PLC	±	–
2 PLC	±	–
3 PLC	±	.010
4 PLC	±	–
ANGLES		± 3°

MATERIAL –

FINISH –

DWN RAGHU	12-1-05
CHK —	–
APVD —	–
PRODUCT SPEC —	
APPLICATION SPEC —	
WEIGHT —	

CUSTOMER DRAWING

tyco Electronics

Tyco Electronics Corporation
Harrisburg, Pa 17105-3608

NAME PUSHBUTTON SWITCH, TP SERIES

–

SIZE	CAGE CODE	DRAWING NO	RESTRICTED TO
A2	00779	C-1825095	—

SCALE	SHEET	OF	REV
4:1	2	3	A

THIS DRAWING IS UNPUBLISHED. RELEASED FOR PUBLICATION -,- .
© COPYRIGHT - BY TYCO ELECTRONICS CORPORATION. ALL RIGHTS RESERVED.

LOC	DIST
AD	00

REVISIONS

P	LTR	DESCRIPTION	DATE	DWN	APVD
	—	SEE SHEET 1	–	—	—

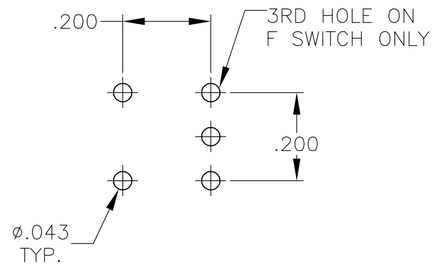

RECOMMENDED HOLE LAYOUT
TOLERANCE ±.002 UNLESS
OTHERWISE NOTED

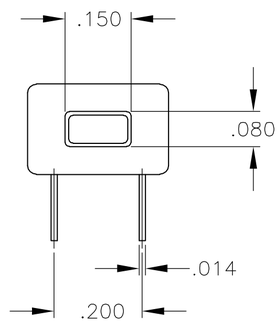

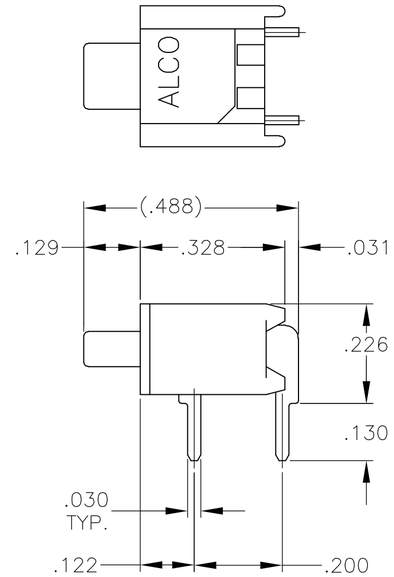

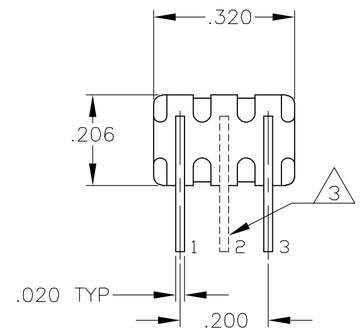

TP11CGRA
TP11FGRA

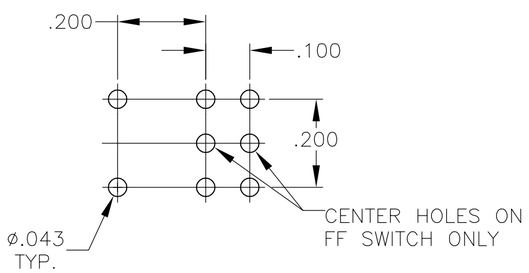

RECOMMENDED HOLE LAYOUT
TOLERANCE ±.002 UNLESS
OTHERWISE NOTED

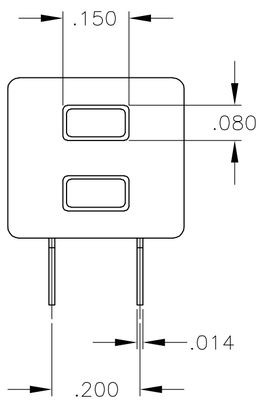

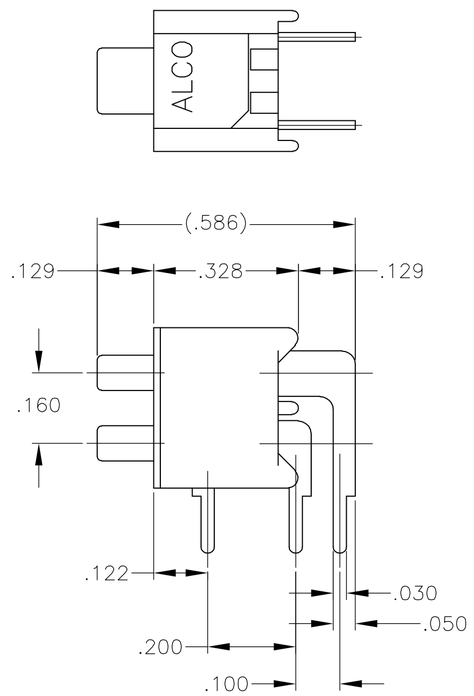

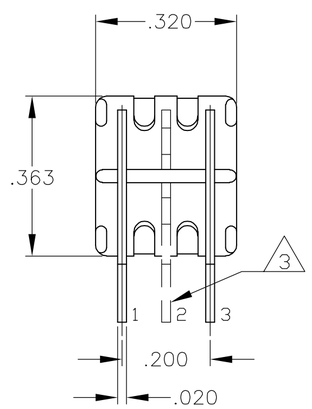

TP21CCGRA
TP21FFGRA

THIS DRAWING IS A CONTROLLED DOCUMENT.		DWN RAGHU 12-1-05	Tyco Electronics Corporation Harrisburg, Pa 17105-3608
DIMENSIONS: INCHES	TOLERANCES UNLESS OTHERWISE SPECIFIED: 0 PLC ± – 1 PLC ± – 2 PLC ± – 3 PLC ± .010 4 PLC ± – ANGLES ± 3°	CHK – APVD – PRODUCT SPEC — APPLICATION SPEC — WEIGHT —	NAME PUSHBUTTON SWITCH, TP SERIES –
MATERIAL –	FINISH –		SIZE A2 CAGE CODE 00779 DRAWING NO C-1825095 RESTRICTED TO —
		CUSTOMER DRAWING	SCALE 1:1 SHEET 3 OF 3 REV A

1825095