Connector–Specific Kit 904379–1

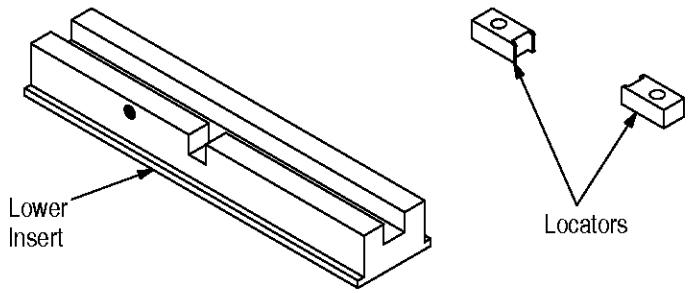

Typical Application Tooling

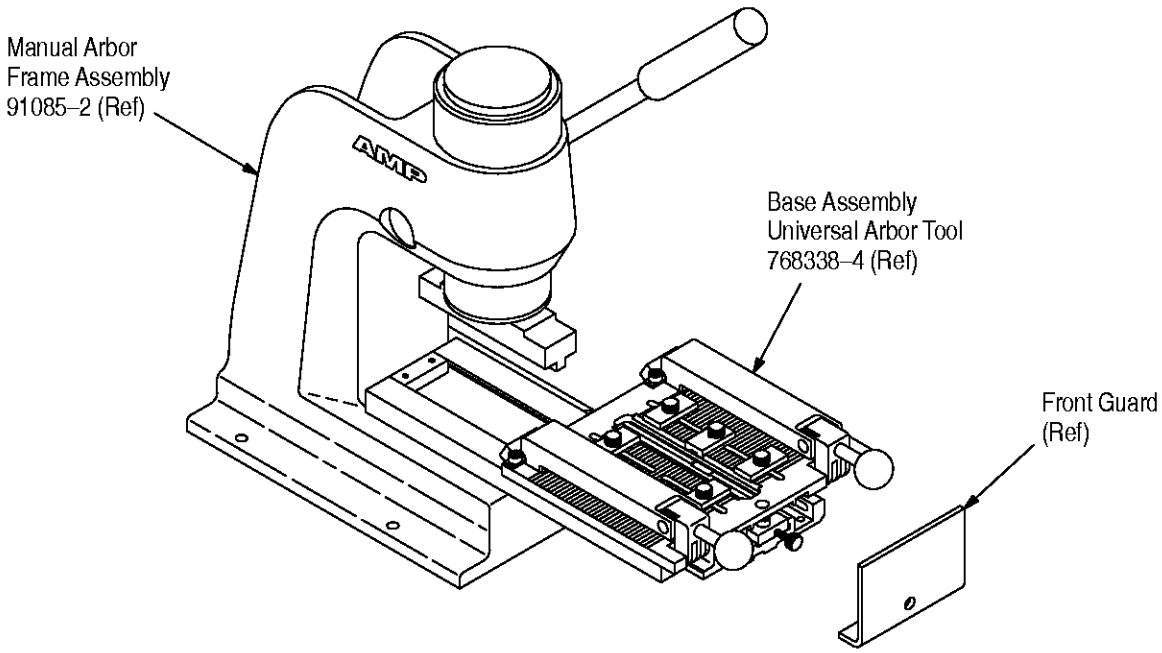

Figure 1

1. INTRODUCTION

This instruction sheet covers the installation and setup procedures for AMP* Connector–Specific Kit 904379–1. The connector–specific kit is used with Base Assembly Universal Arbor Tool 768338–4 and Manual Arbor Frame Assembly 91085–2 (see Figure 1), or Pneumatic Auto–Cycle Unit 91112–3 to terminate Ultra Novo 40–position receptacle connectors onto 0.64 mm [.025 in.] centerline flat ribbon cable.

Refer to instruction sheets 408–7777 (supplied with manual arbor frame assembly) and 408–6732 (supplied with pneumatic auto–cycle unit) for tooling information. Installation and termination procedures for the base assembly universal arbor tool are available in 408–4201.

NOTE *Dimensions on this sheet are in millimeters [followed by inches in brackets]. Figures are not drawn to scale.*

2. DESCRIPTION (Figure 1)

The connector–specific kit features a lower insert and two locators. The lower insert and locators properly align the connector for termination.

©Copyright 1998 by AMP Incorporated. All Rights Reserved.
*Trademark

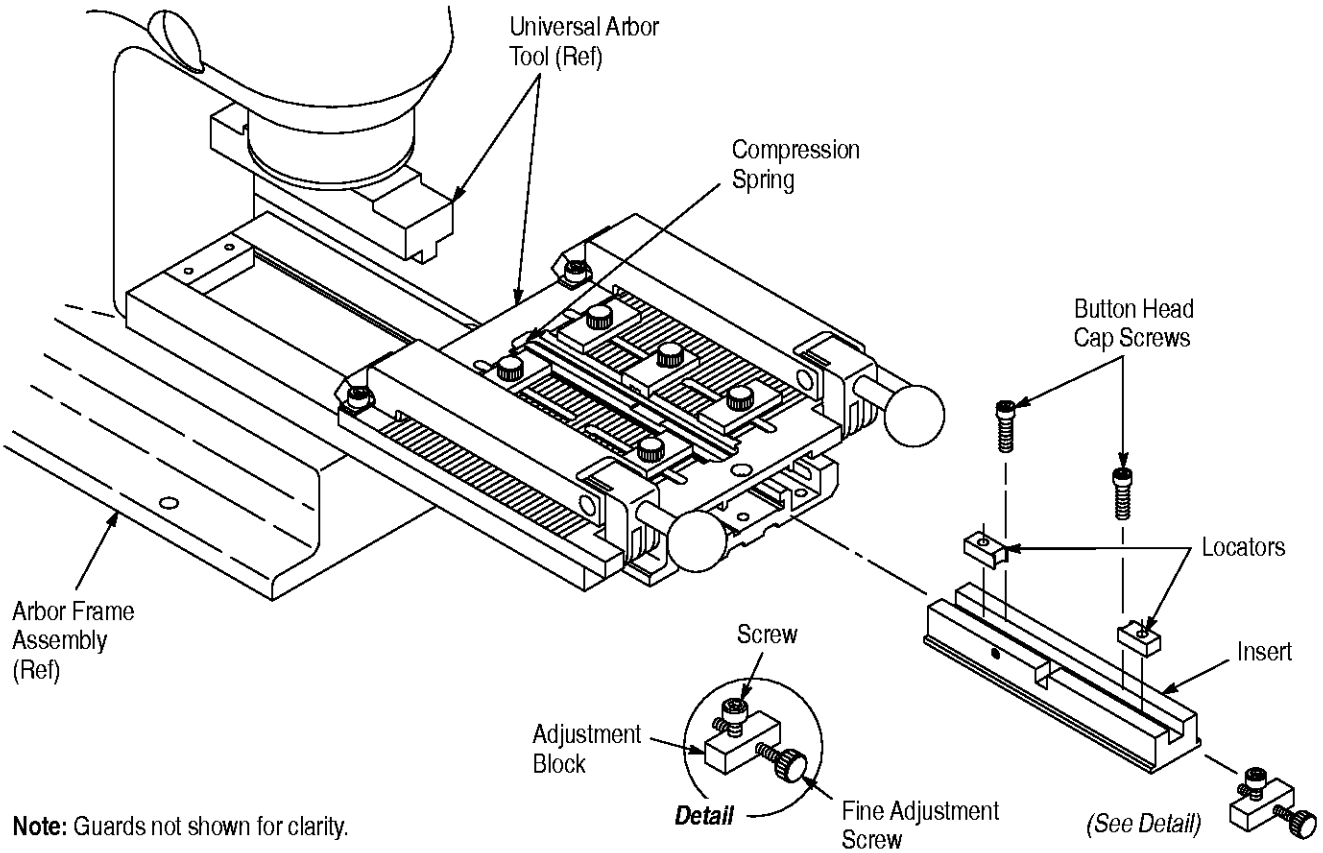

Note: Guards not shown for clarity.

Figure 2

3. INSTALLATION AND SETUP OF CONNECTOR–SPECIFIC KIT

3.1. Installation

These procedures are typical for the manual arbor frame assembly and the pneumatic auto–cycle unit. Before installing the connector–specific kit, install the base assembly universal arbor tool onto the frame assembly, as described in 408–4201.

DANGER *To avoid personal injury, always DISCONNECT air supply from main air valve before installing tooling onto the pneumatic auto–cycle unit.*

1. Position the locators, with the notched edges facing inward, onto the insert. Install, but do not tighten, the button head cap screws just enough to hold the locators in place. Refer to Figure 2.

2. Place the connector into the insert and between the locators. Make sure that the military polarizing slot (*second* slot from the end of the connector) aligns with the setscrew on the side of the lower insert (this is essential in order for the connector to sit level in the insert). See Figure 3. Slide the locators until they butt against the connector, then secure the locators by fully tightening the screws. The connector must fit securely between the locators.

3. When the locators are secure, remove the connector from the insert.

4. Remove the screw that secures the adjustment block to the universal arbor tool, then remove the adjustment block. Slide the insert onto the base assembly until it is against the compression spring. See Figure 2.

5. Re–assemble the adjustment block. *Make sure* to orient the block so that the fine adjustment screw is closest to the right side and bottom side of the block. See detail in Figure 2.

CAUTION *To avoid improper terminations, the adjustment block must be re–assembled properly.*

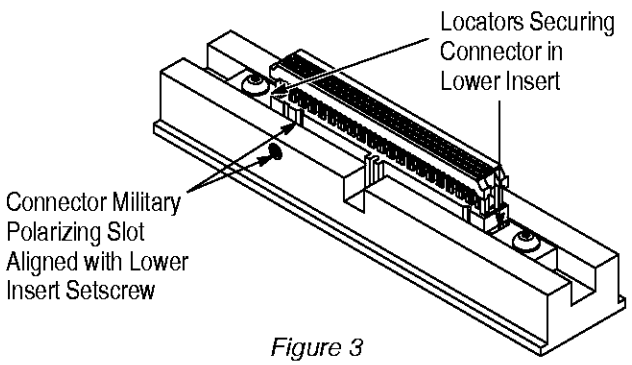

Figure 3

6. Loosen the fine adjustment screw so that it is not touching the insert.

3.2. Setup

1. Remove the cover from the connector, and place the connector into the insert as described in Paragraph 3.1.

2. Position the cable into the universal arbor tool, and follow termination procedures according to the instructions packaged with the arbor tool.

NOTE *When re–assembling cover onto connector, align the polarizing groove in the cover with the polarizing groove in the connector for proper orientation.*

CAUTION *During each termination, tiny plastic nubs sheared from the connector fall into the insert. To avoid interference with terminations, remove the nubs from the insert approximately every twelve terminations.*

3.3. Connector Inspection

1. Perform a test termination and inspect the connector to ensure that the cable conductors are aligned with the contacts. If available, use a tester to inspect the termination, or remove the connector cover and inspect the termination with a microscope to ensure that the cable conductors are properly aligned with the contacts. Refer to AMP Application Specification 114–40056 for termination height dimensions.

2. If the cable conductors are not aligned with the contacts, a re–alignment of the connector is necessary. Determine the direction the connector must be moved to align the cable conductors with the contacts. Loosen the two locking setscrews on the universal arbor tool (which secure the insert) and re–align the insert.

NOTE *For additional information on connector and cable alignment, refer to the instructions packaged with the universal arbor tool.*

4. CONNECTOR–SPECIFIC KIT INSPECTION

The connector–specific kit has been inspected and should be verified with the information provided in Figure 4. AMP recommends that the kit be inspected immediately upon its arrival at your facility (and at regularly scheduled intervals) to ensure that the kit components have not been damaged during handling.

For additional information concerning connector–specific kits, or to purchase additional kits, contact your local AMP representative or:

CUSTOMER SERVICE (38–35)
AMP INCORPORATED
PO BOX 3608
HARRISBURG PA 17105–3608

5. REVISION SUMMARY

Per EC 0990–0817–97:

- Initial release of instruction sheet

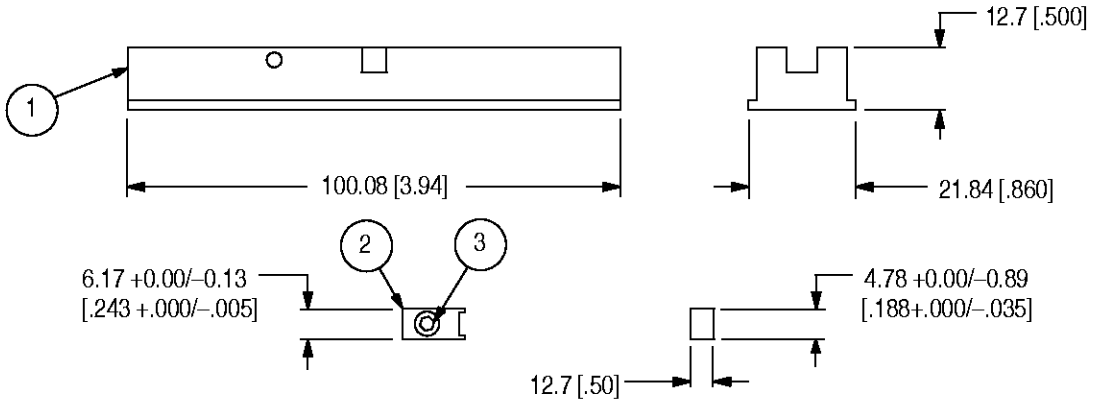

REPLACEABLE PARTS

ITEM	PART NUMBER	DESCRIPTION	QTY PER KIT
1	904377–1	INSERT	1
2	904378–1	LOCATOR	2
3	1–21002–4	SCREW, Button Head Cap, 4–40 x .38 in. L	2

Figure 4