THIS DRAWING IS UNPUBLISHED. RELEASED FOR PUBLICATION -,- .
© COPYRIGHT - BY TYCO ELECTRONICS CORPORATION. ALL RIGHTS RESERVED.

LOC	DIST
G	02

REVISIONS

P	LTR	DESCRIPTION	DATE	DWN	APVD
	R2	REV PER ECR-06-001930	13FEB06	HMR	TM

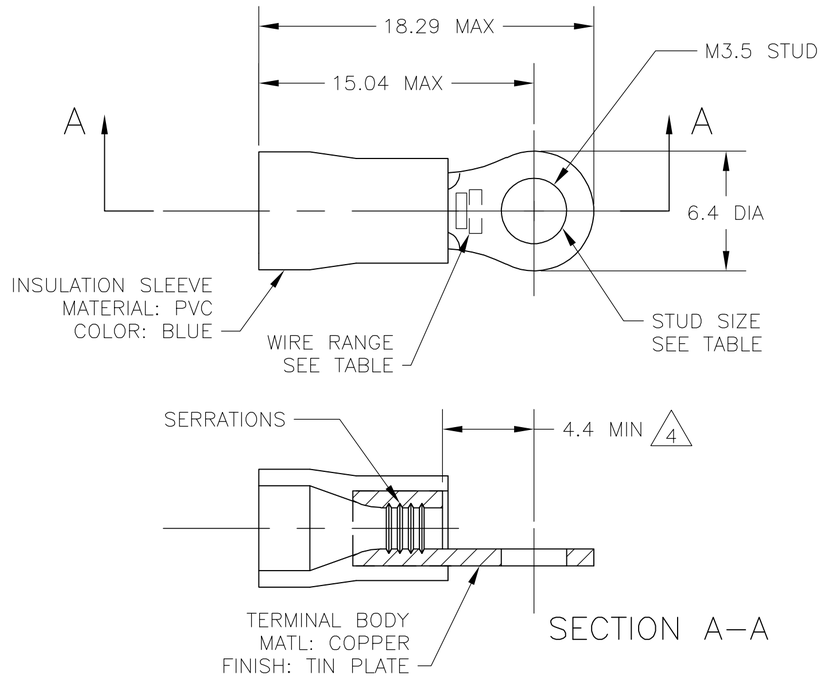

1 WIRE SIZE IS 16–14 AWG

2 WIRE INSULATION DIA: 3.0–4.9

3 MATERIAL THICKNESS IS 0.8

4 DIMENSION APPLIES FROM EDGE OF METAL WIRE BARREL TO END OF PIN.

5 SUPERSEDED BY 342142–1

6 OBSOLETE, NO REPLACEMENT

PACKAGING	LABELLING	QTY	PART NO
BULK	SCANDINAVIAN	5000	6 8–342142–7
POLY BAG WITH HEADER	STANDARD	100	5 7–342142–1
PLASTIC BOX	STANDARD	100	5 6–342142–1
TAPED MOUNTED	STANDARD	5000	2–342142–1
PLASTIC BAG	STANDARD	100	342142–1

THIS DRAWING IS A CONTROLLED DOCUMENT.

DIMENSIONS: INCHES

TOLERANCES UNLESS OTHERWISE SPECIFIED:

0 PLC	±	–
1 PLC	±	0.5
2 PLC	±	–
3 PLC	±	–
4 PLC	±	–
ANGLES		± 1°

MATERIAL –

FINISH –

DWN	jr ruth	02DEC05
CHK	T MICHIELUTTI	02DEC05
APVD	T MICHIELUTTI	02DEC05
PRODUCT SPEC	—	
APPLICATION SPEC	—	
WEIGHT	—	

tyco Electronics

Tyco Electronics Corporation
Harrisburg, PA 17105–3608

NAME TERMINAL, RING TONGUE, PLASTI–GRIP,
–
–

SIZE	CAGE CODE	DRAWING NO	RESTRICTED TO
A2	00779	C–342142	—

CUSTOMER DRAWING | SCALE 5:1 | SHEET 1 OF 1 | REV R2

342142