NUMBER C-440378

3RD ANGLE PROJECTION

METRIC

NAME	AMP P/N	ID MARK	WIRE RANGE	ød2	W	F	L	E	øD	ød1	t	QTY	BOX SIZE
1.25-3	1-440378-1	1.25-3	0.25~1.25mm² 0.3(AWG#22) 0.5(AWG#20) 0.75(AWG#18) 1.25(AWG#16)	3.2 +0.2 -0	5.5 ±0.2	4.8 ±0.3	12.2 +0.3 -1.0	4.8 ±0.5	3.4 +0.3 -0.2	1.7 ±0.2	0.75 ±0.02	1,000	PM1
1.25-3.5M	1-440378-2	1.25-3.5M		3.7 +0.2 -0	6.6 ±0.2	6.3 ±0.3	14.2 ±1.0	4.8 ±0.5	3.4 +0.3 -0.2	1.7 ±0.2	0.75 ±0.02	1,000	PM1
1.25-4L	1-440378-3	1.25-4L		4.3 +0.2 -0	8.0 ±0.2	7.0 ±0.3	15.6 +0.4 -1.0	4.8 ±0.5	3.4 +0.3 -0.2	1.7 ±0.2	0.75 ±0.02	1,000	PM1
1.25-5	1-440378-4	1.25-5		5.3 +0.2 -0	8.0 ±0.2	7.0 +0.3 -0	15.6 +0.4 -1.0	4.8 ±0.5	3.4 +0.3 -0.2	1.7 ±0.2	0.75 ±0.02	1,000	PM1
2-3.5S	2-440378-1	2-3.5S	1.25~2.0mm² 1.25(AWG#16) 2.0(AWG#14)	3.7 +0.2 -0	6.6 ±0.2	4.8 ±0.3	12.9 ±1.0	4.8 ±0.5	4.1 +0.4 -0.1	2.3 ±0.2	0.8 +0.02 -0	1,000	PM1
2-4L	2-440378-2	2-4L		4.3 +0.2 -0	8.5 ±0.2	7.4 ±0.3	16.5 +0.5 -1.0	4.8 ±0.5	4.1 +0.4 -0.1	2.3 ±0.2	0.8 +0.02 -0	1,000	PM1
2-5L	2-440378-3	2-5L		5.3 +0.2 -0	9.5 ±0.2	7.4 ±0.3	17.0 +0.5 -1.0	4.8 ±0.5	4.1 +0.4 -0.1	2.3 ±0.2	0.8 +0.02 -0	1,000	PM1
4 2-6	~~2-440378-4~~	2-6		6.4 +0.4 -0	12.0±0.2	10.9 ±0.3	21.7 +0.3 -1.0	4.8 ±0.5	4.1 +0.4 -0.1	2.3 ±0.2	0.8 +0.02 -0	1,000	PM2
4 2-8	~~2-440378-5~~	2-8		8.4 +0.4 -0	12.0 ±0.2	10.9 ±0.3	21.7 +0.3 -1.0	4.8 ±0.5	4.1 +0.4 -0.1	2.3 ±0.2	0.8 +0.02 -0	1,000	PM2
5.5-4L	5-440378-1	5.5-4L	3.5~5.5mm² 3.5(AWG#12) 5.5(AWG#10)	4.3 +0.2 -0	9.5 ±0.2	8.3 ±0.3	19.1 +0.9 -1.0	6.0 +0.5 -0.1	5.6 +0.3 -0.2	3.4 ±0.2	1.0 ±0.02	1,000	PM2
5.5-5	5-440378-2	5.5-5		5.3 +0.2 -0	9.5 ±0.2	8.3 ±0.3	19.1 +0.9 -1.0	6.0 +0.5 -0	5.6 +0.3 -0.2	3.4 ±0.2	1.0 ±0.02	1,000	PM2
5.5-6	5-440378-3	5.5-6		6.4 +0.4 -0	12.0±0.2	10.3 ±0.3	22.3 ±1.0	6.0 +0.5 -0	5.6 +0.3 -0.2	3.4 ±0.2	1.0 ±0.02	1,000	PM2
4 5.5-8	~~5-440378-4~~	5.5-8		8.4 +0.4 -0	15.0±0.2	13.3 ±0.3	26.8 ±1.0	6.0 +0.5 -0	5.6 +0.3 -0.2	3.4 ±0.2	1.0 ±0.02	1,000	PM2
5.5-10	~~5-440378-5~~	5.5-10		10.5 +0.4 -0	15.0 ±0.2	13.5 +0.3 -0	26.8 ±1.0	6.0 +0.5 -0	5.6 +0.3 -0.2	3.4 ±0.2	1.0 ±0.02	1,000	PM2

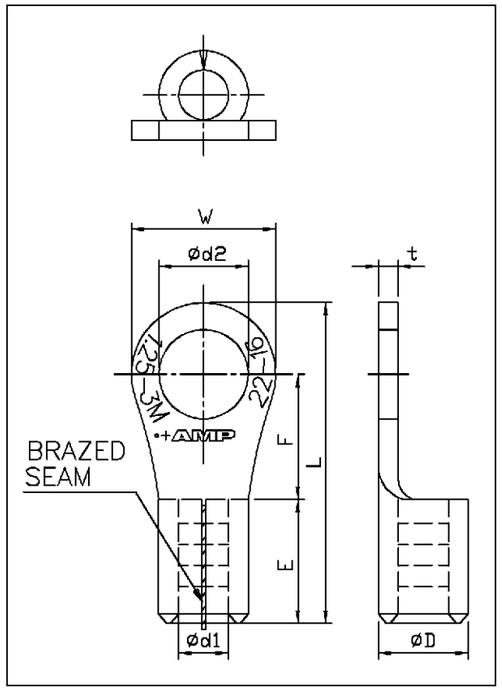

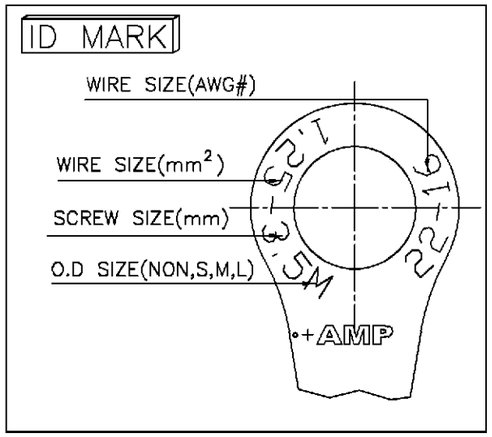

NOTE :

1.TERMINAL : NON INSULATED WITH BRAZED SEAM
2.BASIC TERMINALS MATERIAL :
FINE GRADE HIGH CONDUCTIVITY COPPER PER JIS H3100
3.PLATING : TIN PLATED [2.5um MIN.]
4 OBSOLETE PARTS: OBSOLETE CIS STREAMLINING PER D.RENAUD/D.SINISI

LTR	REVISION RECORD	ECN	DR/CHK	DATE
B1	ECO-09-026346	—	KK/AEG	26NOV 09
B	REVISED	FZ00-0011-01	OH/JC	20JUN 2001
A	REVISED	FW00-0087-00	OH/JC	13OCT 2000
0	FIRST RELEASED	FW00-0060-00	OH/JC	16SEP 2000

DIMENSION :
0 PLC ±0.5
1 PLC ±0.25
2 PLC ±0.12
3 PLC ±0.08
ANGLES ±3°

MATERIAL: SEE NOTE

FINISH: SEE NOTE

DR. O. HU 20-JUN-2001
CHK. J. CHENG 20-JUN-2001
APP. J. WU 20-JUN-2001
PRODUCT SPEC 108-57103
APPLICATION SPEC 114-57005
WEIGHT

AMP | AMP INCORPORATED. IPO

NAME: SOLISTLAND RING TERMINAL

LOC DW | SIZE A3 | DRAWING NO C-440378 | REV B1

SCALE --

SHEET 1 OF 2

CUSTOMER DRAWING

PRINT DIST DW

THIS INFORMATION IS CONFIDENTIAL AND IS DISCLOSED TO YOU ON CONDITION THAT NO FURTHER DISCLOSURE IS MADE BY YOU TO OTHER THAN AMP PERSONNEL WITHOUT WRITTEN AUTHORIZATION FROM AMP (TAIWAN) LTD.
DIMENSION IN MILLMETERS. DO NOT SCALE PRINT.

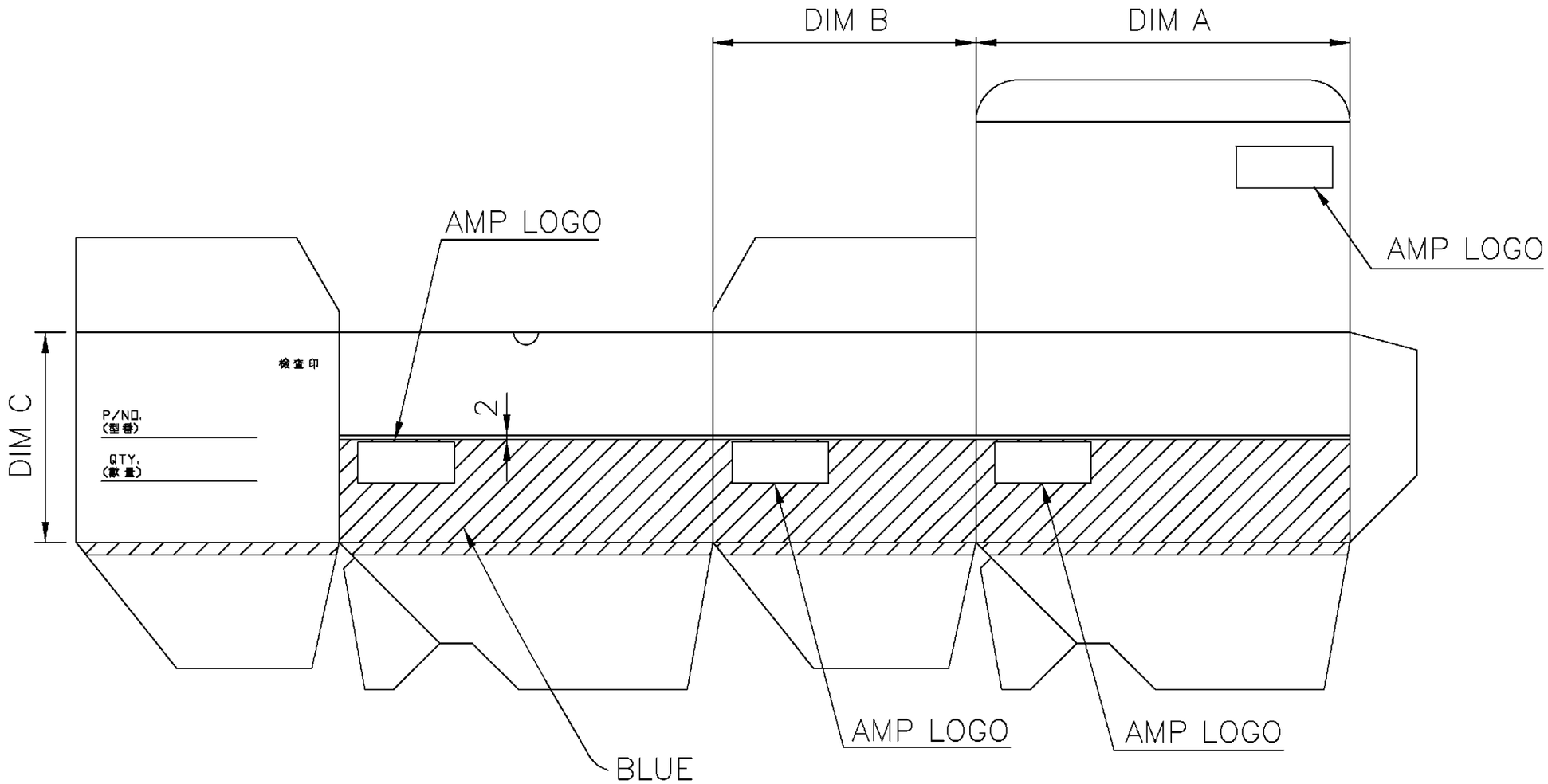

BOX SIZE	INNER	DIM A	DIM B	DIM C
PM1	PS1*10	160	115	48
PM2	PS2*10 PS3*5	160	115	96

DIMENSION :
0 PLC ±0.5
1 PLC ±0.25
2 PLC ±0.12
3 PLC ±0.08
ANGLES ±3°

MATERIAL: SEE NOTE

FINISH: SEE NOTE

DR. O. HU 20-JUN-2001
CHK. J. CHENG 20-JUN-2001
APP. J. WU 20-JUN-2001
PRODUCT SPEC
APPLICATION SPEC
WEIGHT

AMP | AMP INCORPORATED. IPO

NAME: SOLISTLAND RING TERMINAL

LOC DW | SIZE A3 | DRAWING NO C-440378 | REV B1

SCALE --

SHEET 2 OF 2

LTR	REVISION RECORD	ECN	DR/CHK	DATE
	SEE SHEET 1			

CUSTOMER DRAWING

NUMBER C-440378

3RD ANGLE PROJECTION

METRIC

THIS INFORMATION IS CONFIDENTIAL AND IS DISCLOSED TO YOU ON CONDITION THAT NO FURTHER DISCLOSURE IS MADE BY YOU TO OTHER THAN AMP PERSONNEL WITHOUT WRITTEN AUTHORIZATION FROM AMP (TAIWAN) LTD.
DIMENSION IN MILLMETERS. DO NOT SCALE PRINT.

PRINT DW | DIST