THIS DRAWING IS UNPUBLISHED. RELEASED FOR PUBLICATION AUG ,2006.
© COPYRIGHT – BY TYCO ELECTRONICS CORPORATION. ALL RIGHTS RESERVED.

LOC	DIST
DW	–

REVISIONS

P	LTR	DESCRIPTION	DATE	DWN	APVD
	B1	REVISED. (ECR-09-012560)	02JUN09	FY	WK

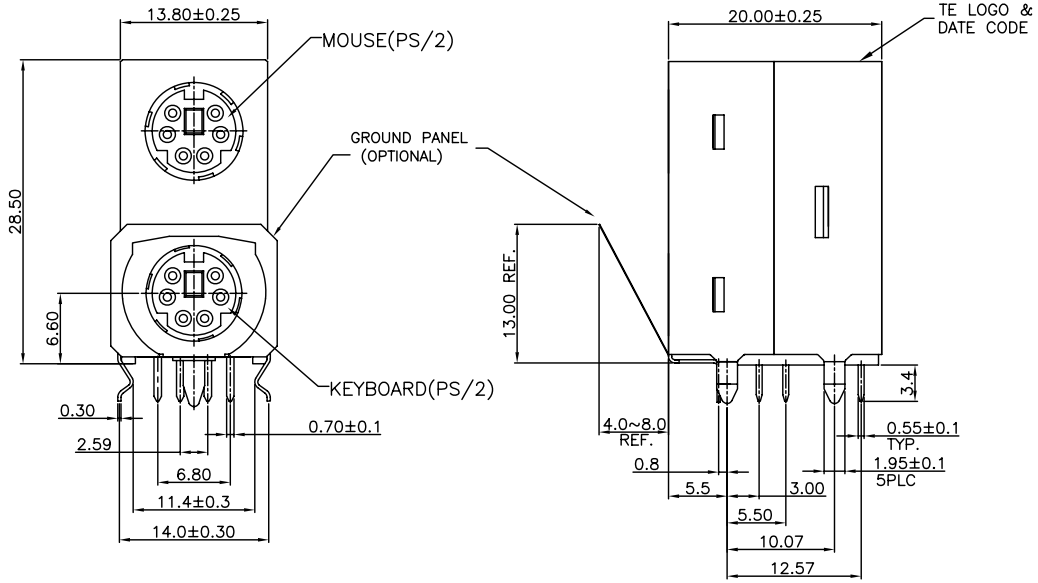

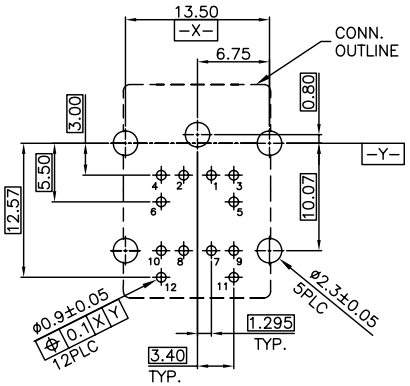

RECOMMENDED P.C.B LAYOUT (TOLERANCE: ±0.05)
THICKNESS=1.6mm (BOTTOM VIEW)

NOTES:
1. MATERIAL:
   HOUSING: THERMOPLASTIC(PBT), W/30% G/F, UL94V-0,
   COLOR: SEE TABLE.
   BOTTOM COVER: THERMOPLASTIC(PBT), W/30% G/F
   UL94 V-0, BLACK COLOR
   CONTACTS: BRASS
   SHIELD: SPCC
   GROUNDING TAB: SPCC
2. FINISH:
   CONTACT:
   GOLD(SEE TABLE)PLATING ON CONTACT AREA.
   2.54um[100u"] MIN. MATTE TIN PLATING ON SOLDER TAIL AREA,
   1.27um[50u"] MIN. NICKEL UNDERPLATED OVERALL.
   SHIELD:
   1.524um[60u"] MIN. BRIGHT TIN PLATING OVERALL
   1.27um[50u"] MIN. NICKEL UNDERPLATED OVERALL
3. WAVE SOLDER CAPABLE TO 265°C
   PER TE SPEC. 109-202, CONDITION B.
4. RECOMMENDED PCB THICKNESS: 1.6mm

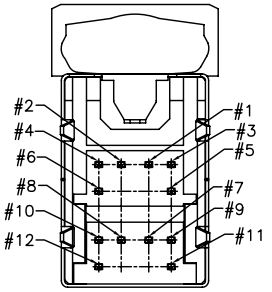

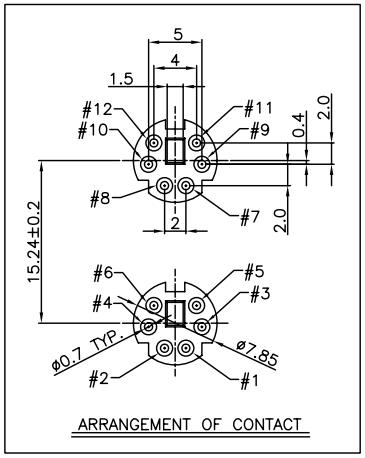

ARRANGEMENT OF CONTACT

PURPLE (2715C)	GREEN (3395C)	W/	15u" MIN.	2-1734021-3
		W/O	30u" MIN.	1-1734021-4
		W/		1-1734021-3
		W/O	GOLD FLASH	1734021-4
		W/		1734021-3
BLACK		W/O		1734021-2
		W/		1734021-1
KEYBOARD	MOUSE	GROUND PANEL	GOLD PLATED	PART NUMBER
COLOR OF COMPONENT				

THIS DRAWING IS A CONTROLLED DOCUMENT.

DIMENSIONS: MM

TOLERANCES UNLESS OTHERWISE SPECIFIED:

0 PLC	± –
1 PLC	± 0.3
2 PLC	± 0.2
3 PLC	± –
4 PLC	± –
ANGLES	± 3°

MATERIAL: SEE NOTE
FINISH: SEE NOTE

DWN	F. YANG	02JUN2009
CHK	S. CHIEN	02JUN2009
APVD	W. KODAMA	02JUN2009
PRODUCT SPEC	108-57614	
QUALIFICATION TEST REPORT	501-57725	
WEIGHT	SEE PACKAGE	

Tyco Electronics
Tyco Electronics Corporation
Taipei, Taiwan

NAME: STACKED MINI DIN CONNECTOR, RCPT, 6 POSN.

SIZE	CAGE CODE	DRAWING NO	RESTRICTED TO
A3	00779	C-1734021	–

CUSTOMER DRAWING | SCALE – | SHEET 1 OF 2 | REV B1

THIS DRAWING IS UNPUBLISHED. RELEASED FOR PUBLICATION ¬ - .
© COPYRIGHT - BY TYCO ELECTRONICS CORPORATION. ALL RIGHTS RESERVED.

LOC	DIST
DW	—

REVISIONS

P	LTR	DESCRIPTION	DATE	DWN	APVD
		SEE SHEET 1.			

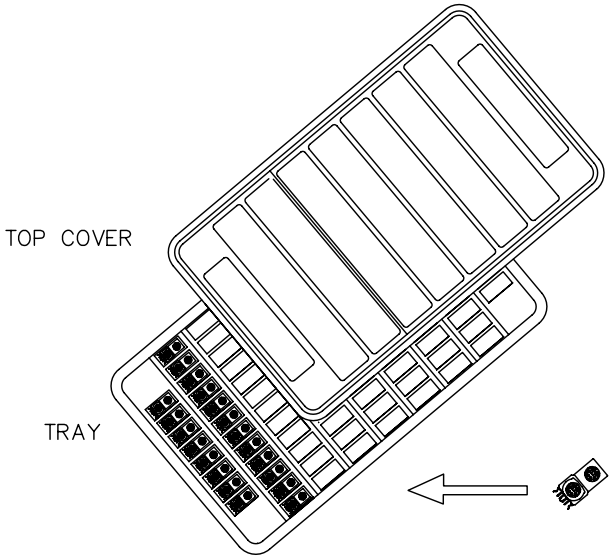

NOTES:
1. MATERIAL:
   TRAY: PS or PET
2. DIMENSION:
   TRAY: L=360, W=220, H=25
   SHIPPING BOX: L=380, W=230, H=260
3. QUANTITY:
   PRIMARY PACKING: 100 PCS/TRAY
   SECONDARY PACKING: 10 TRAY/BOX(1,000PCS)
4. WEIGHT:

GROUND PANEL	W/	W/O
NET WEIGHT	11.4 Kg	11 Kg
GROSS WEIGHT	12.8 Kg	12.4 Kg

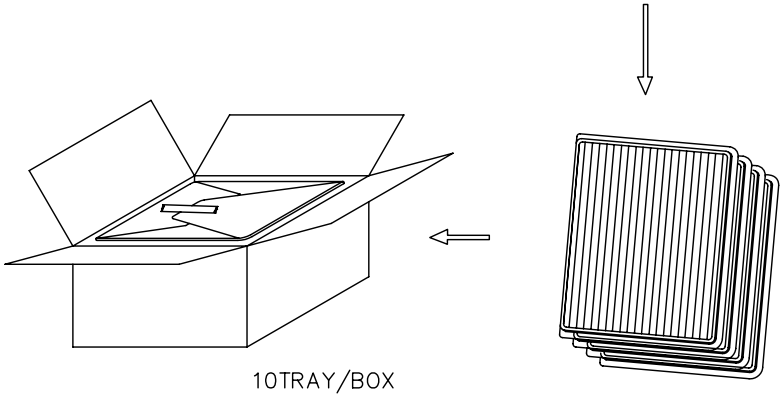

THIS DRAWING IS A CONTROLLED DOCUMENT.

DIMENSIONS: MM

TOLERANCES UNLESS OTHERWISE SPECIFIED:
0 PLC ± –
1 PLC ± –
2 PLC ± –
3 PLC ± –
4 PLC ± –
ANGLES ± –

MATERIAL –
FINISH –

DWN
CHK
APVD
PRODUCT SPEC —
APPLICATION SPEC —
WEIGHT —

Tyco Electronics
Tyco Electronics Corporation
Taipei, Taiwan

NAME
STACKED MINI DIN
CONNECTOR, RCPT, 6 POSN.

SIZE	CAGE CODE	DRAWING NO	RESTRICTED TO
A3	00779	C-1734021	—

CUSTOMER DRAWING | SCALE — | SHEET 2 OF 2 | REV B1