THIS DRAWING IS UNPUBLISHED. RELEASED FOR PUBLICATION –,– .
© COPYRIGHT – BY TYCO ELECTRONICS CORPORATION. ALL INTERNATIONAL RIGHTS RESERVED.

LOC	DIST
HC	00

REVISIONS

P	LTR	DESCRIPTION	DATE	DWN	APVD
	A	ECN 93-0104	08-03-93	RD	BB
	B	REVISED PER ECO-08-030676	26-02-09	AEG	JKO

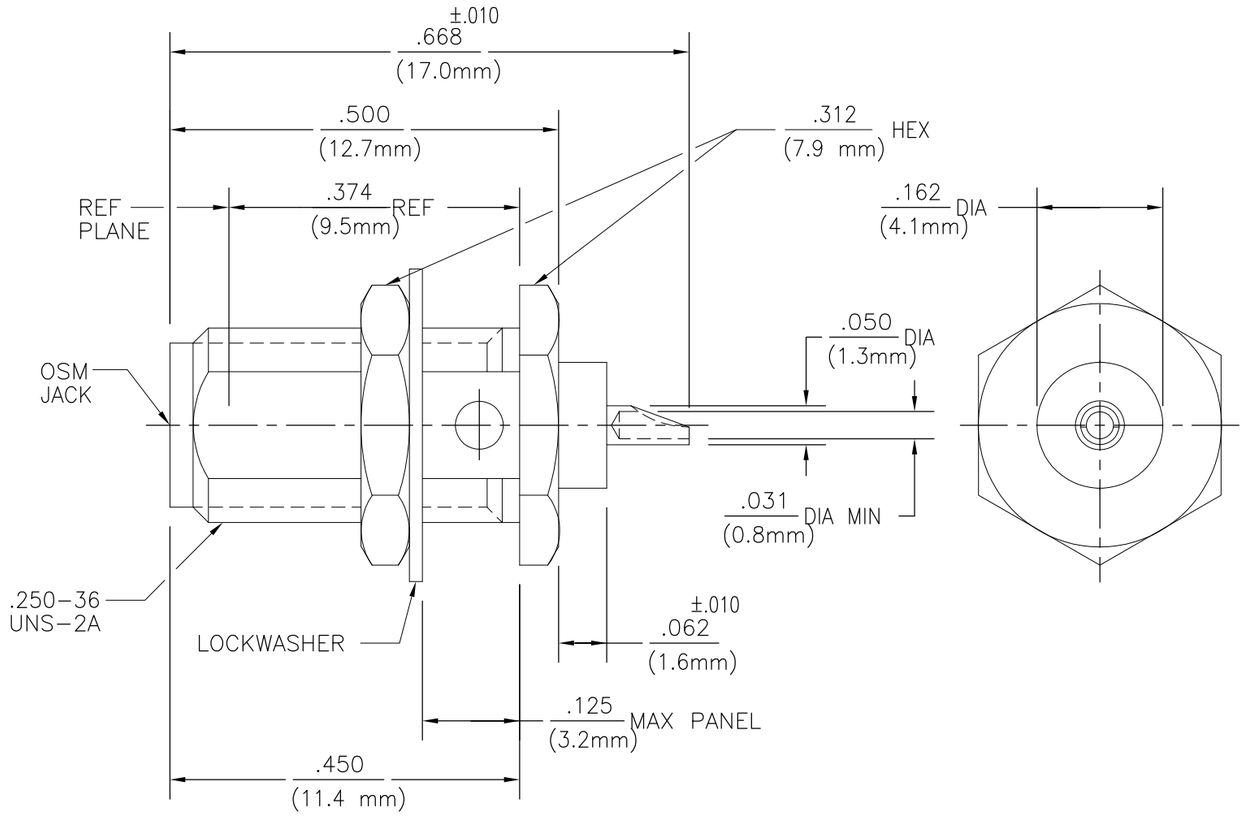

RECOMMENDED MOUNTING HOLE

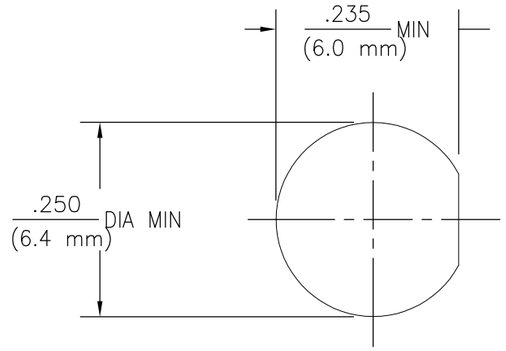

1. BRASS
2. STAINLESS STEEL
3. BERYLLIUM COPPER
4. PTFE
5. GOLD PLATE

ELECTRICAL	MECHANICAL	ENVIRONMENTAL
Nominal Impedance (Ohms) 50	Interface Dimensions MIL–STD–348A,	TEMPERATURE RATING –65°C TO 125°C
Frequency Range (GHz) DC to 18.0	Fig. 310.2	Vibration MIL–STD–202, Method
Volt Rating (VRMS MAX)	Recommended Mating	204, Condition D
@ Sea Level 335	Torque 7 to 10	Shock MIL–STD–202, Method 213,
VSWR N/A	Mating Characteristics:	Condition I
Insertion Loss (dB MAX) N/A	Insertion (MAX Lbs) 3.0	Thermal Shock MIL–STD–202,
RF Leakage (dB MIN) N/A	Withdrawal (MIN Oz) 1.0	Method 107, Condition B,
	Force to Engage and	EXCEPT HIGH TEMP +115°C
Dielectric Withstanding Voltage	Disengage (In–Lbs MAX) 2.0	Moisture Resistance MIL–STD–202,
(VRMS MIN) @ Sea Level 1000	Center Contact Captivation	Method 106, Except Vibration
Contact Resistance (Milliohms MAX)	Axial (Lbs) 6.0	Shall Be Omitted
Center Contact 2.0	Radial (In–Oz) 4.0	Corrosion – MIL–STD–202, Method
Outer Contact 2.0	Cable Retention	101, Condition B, 5% salt spray
Cable to Housing N/A	Axial Force (Lbs) N/A	
RF High Potential @ Sea Level	Torque (In–Oz) N/A	
(VRMS MIN @ 5 MHz) 670	Weight (Grams) TBD	
I.R.(Megohms MIN) 10,000		

1 5	1 5	2 5	4	3 5	1053072–3
2 5	2 5	2 5	4	3 5	1053072–1
HOUSING	MOUNTING NUT	LOCKWASHER	DIELECTRIC	CONTACT	TE PN

THIS DRAWING IS A CONTROLLED DOCUMENT.

DIMENSIONS: INCHES

TOLERANCES UNLESS OTHERWISE SPECIFIED:

0 PLC	± –
1 PLC	± –
2 PLC	± –
3 PLC	± .005
4 PLC	± –
ANGLES	± 1°

MATERIAL –

FINISH –

DWN B.W.C.	6/6/67
CHK P.R.B.	5/9/68
APVD P.E.G.	6/5/68
PRODUCT SPEC	–
APPLICATION SPEC	–
WEIGHT	–

Tyco Electronics

Tyco Electronics Corporation
Harrisburg, PA 17105–3608

NAME
OSM BULKHEAD FEEDTHRU JACK RECEPTACLE
SOLDER POT TERMINAL

SIZE	CAGE CODE	DRAWING NO	RESTRICTED TO
A3	00779	C–1053072	–

CUSTOMER DRAWING | SCALE 5:1 | SHEET 1 OF 1 | REV B

1470–19 (1/08)