THIS DRAWING IS UNPUBLISHED. RELEASED FOR PUBLICATION -,- .
© COPYRIGHT – BY TYCO ELECTRONICS CORPORATION. ALL RIGHTS RESERVED.

LOC	DIST
AJ	16

REVISIONS

P	LTR	DESCRIPTION	DATE	DWN	APVD
	0	RELEASED PER EC 0S14-0188-05	21OCT05	BM	KW

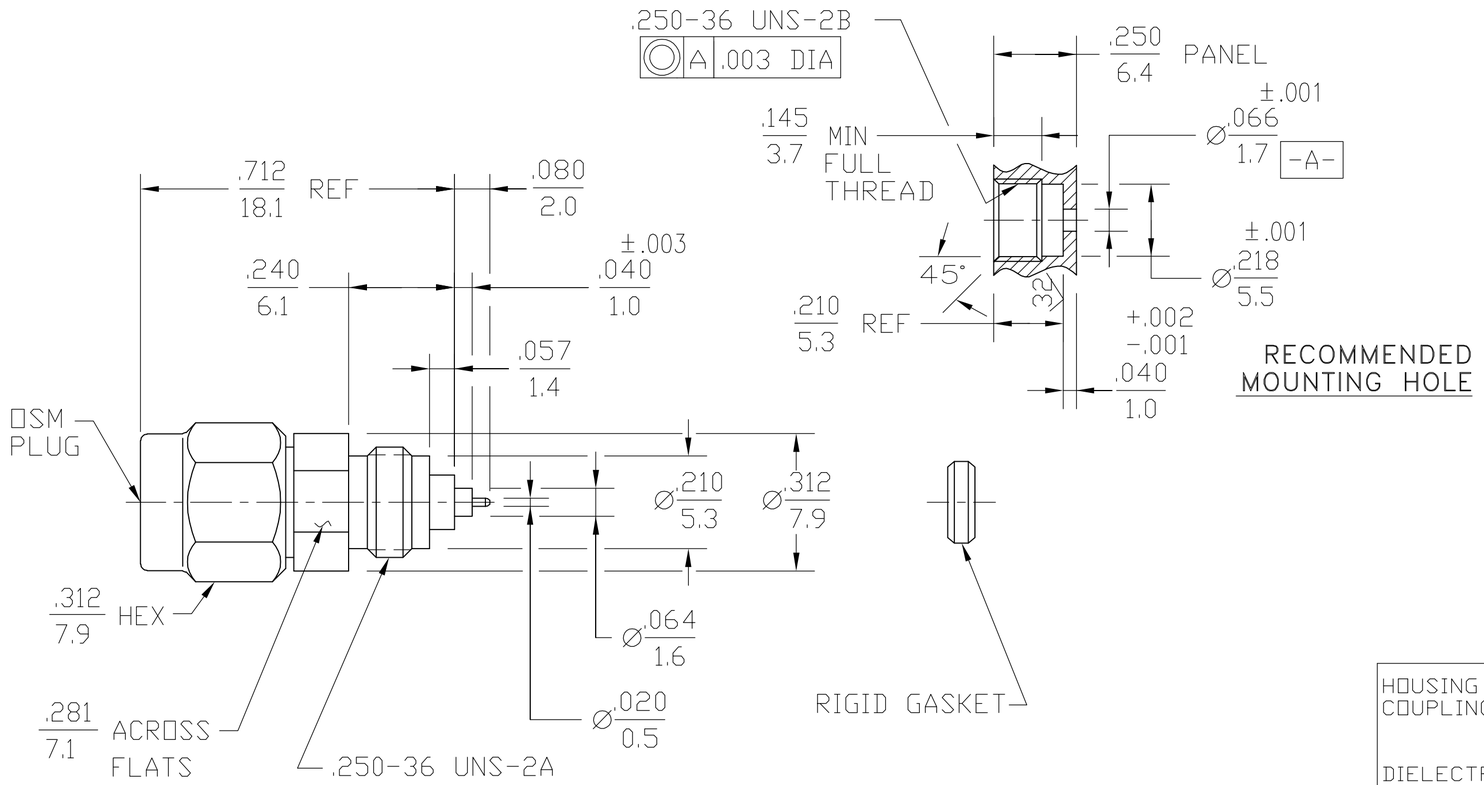

COMPONENT	MATERIAL	FINISH
HOUSING COUPLING NUT	STAINLESS STEEL PER ASTM-A484 AND ASTM-A582, TYPE 303	GOLD PLATED PER MIL-G-45204
DIELECTRIC	PTFE FLUOROCARBON PER ASTM-D-1457	N/A
CENTER CONTACT	BERYLLIUM COPPER PER ASTM-B-196 OR ASTM-B-197, ALLOY C17300, CONDITION H	GOLD PLATE PER MIL-G-45204
RETAINING RING	BERYLLIUM COPPER PER ASTM-B-194, ALLOY C17200, CONDITION H	N/A
CONTACT EXT BUSHING	IRON-NICKEL-COBALT ALLOY PER MIL-1-23011 CLASS 1 (KOVAR)	GOLD PLATE PER MIL-G-45204
GASKET	SILICONE RUBBER PER ZZ-R-765	N/A
RIGID GASKET	SAE C12L14 STEEL	SILVER PLATED PER QQ-S-365
HERMETIC SEAL	GLASS BEAD	N/A

6053130-1
PART NUMBER

6053130

ELECTRICAL		MECHANICAL		ENVIRONMENTAL
Nominal Impedance (Ohms)	50	Interface Dimensions MIL-STD-348A Fig. 310.1		TEMPERATURE RATING -65°C TO +125°C
Frequency Range (GHz)	DC - 18	Recommended Mating Torque	7 - 10 in-lbs	Vibration - MIL-STD-202, Method 204, Condition D, 20G's
VSWR	1.04 +.009f(GHz)	Mating Characteristics:		Shock - MIL-STD-202, Method 213, Condition I, 100G's
Insertion Loss (dB MAX)	.04 $\sqrt{f(GHz)}$	Insertion (MAX Lbs)	N/A	Thermal Shock MIL-STD-202, Method 107, Condition B
RF Leakage (dB MIN)	-(100 - f(GHz))	Withdrawal (MIN Oz)	N/A	Moisture Resistance - MIL-STD-202, Method 106
Corona, 70,000 Ft (VRMS MIN)	333	Force To Engage (In-Lbs MAX)	2.0	Corrosion - MIL-STD-202, Method 101, Condition B, 5% salt spray
Dielectric Withstanding Voltage (VRMS MIN)	1000 @ sea level	Force To Disengage (In-Lbs MAX)	2.0	
Contact Resistance (Milliohms MAX)		Center Contact Captivation		
Center Contact	10.0	Axial (Lbs)	6.0	
Outer Contact	2.0	Radial (In-Oz)	N/A	
RF High Potential @ sea level (VRMS MIN @ 5 MHz)	667	Weight (Grams)	T.B.D.	
I.R.(Megohms)	5000			

THIS DRAWING IS A CONTROLLED DOCUMENT.

DIMENSIONS: INCHES(mm)

TOLERANCES UNLESS OTHERWISE SPECIFIED:
0 PLC ± –
1 PLC ± –
2 PLC ± –
3 PLC ± .005
4 PLC ± –
ANGLES ± 1°

MATERIAL –
FINISH –

DWN B. MCMASTER 21OCT05
CHK K. WEINDER 21OCT05
APVD K. WEINDER 21OCT05
PRODUCT SPEC –
APPLICATION SPEC 408-4848
WEIGHT –
CUSTOMER DRAWING

tyco Electronics
Tyco Electronics Corporation
Harrisburg, PA 17105-3608

NAME
OSM PLUG-THD, MTD
NON HERMETIC,
ENVIROMENTALLY DURABLE

SIZE	CAGE CODE	DRAWING NO	RESTRICTED TO
A2	00779	C-6053130	–

SCALE 4:1 SHEET 1 OF 1 REV 0