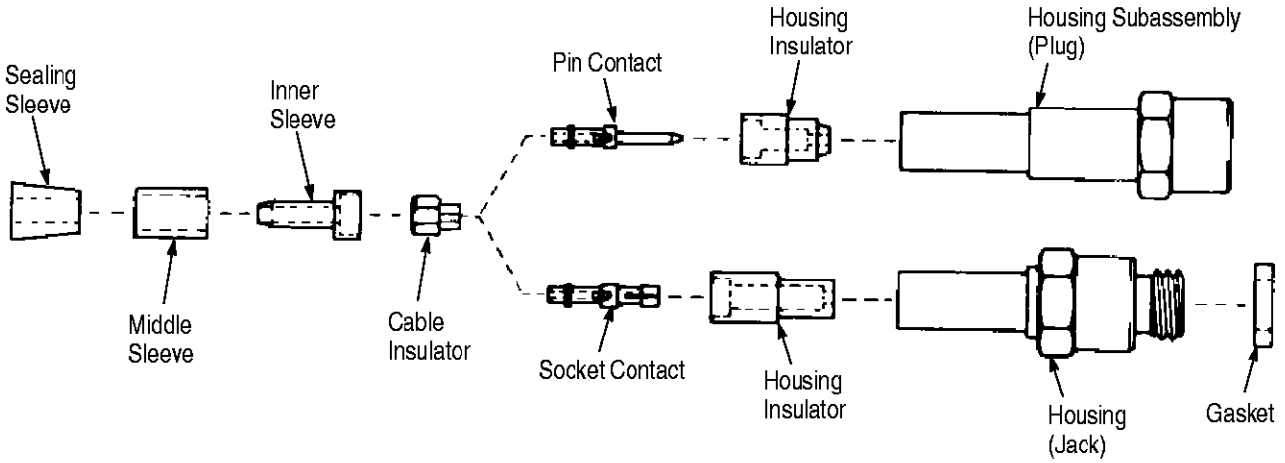

Figure 1

INTRODUCTION

This instruction sheet covers the assembly procedures for Golden Crimp and Crimp Silver Connectors. See Figure 1.

NOTE *Dimensions on this sheet are in inches [with millimeters in brackets]. Figures and illustrations are for identification only and are not drawn to scale.*

Step 1

Slip sealing sleeve and middle sleeve over cable as shown in Figure 2.

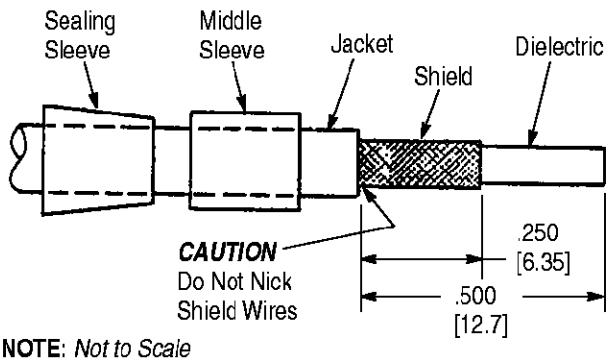

Figure 2

Step 2

Strip cable to dimensions shown in Figure 2. Fan shield slightly, but do not unbraid.

CAUTION *Extreme care must be taken to avoid nicking or cutting shield wires when trimming jacket.*

Note: For assembly to cable with "Mini–Noise" coating, Mini–Noise coating must be removed from surface of cable dielectric as follows:

1. Painted Coatings: Wipe off dielectric surface with a dry cloth. Wipe again using paint thinner or trichloroethane. Do not immerse cable in solvent.

2. Tape or Fused Coatings: Remove with sandpaper, file, or scraping action of razor blade. Do not damage dielectric.

DANGER *To prevent personal injury, use caution when handling file or razor blade.*

Step 3

Slide inner sleeve, small end first, over dielectric and under the shield until shield wires are flush with shoulder.

Trim excess shield if necessary.

Slide middle sleeve flush with shoulder of inner sleeve. Slide sealing sleeve until it butts against the middle sleeve as shown in Figure 3.

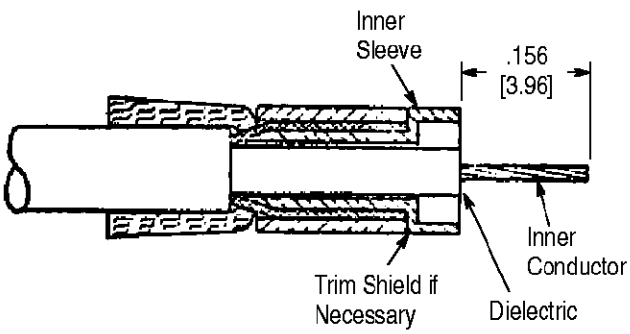

Figure 3

Step 4

Trim dielectric flush with face of inner sleeve.

CAUTION *Do not nick inner conductor.*

Trim inner conductor to length shown in Figure 3.

Step 5

Slide cable insulator over inner conductor and into inner sleeve as shown in Figure 4.

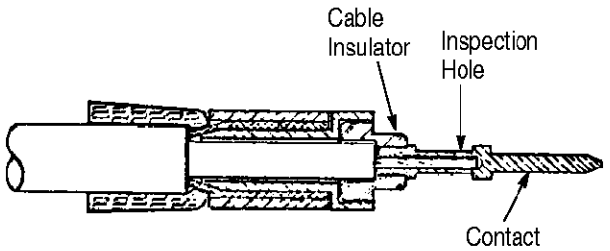

Figure 4

Step 6

Slide contact over inner conductor and press into cable insulator as shown in Figure 4. Inner conductor must be visible through inspection hole.

With all parts fitted securely, crimp contact with any one of the contact crimp tools listed in Figure 5.

TYCO ELECTRONICS PART NUMBER	MICRODOT PART NUMBER	MFG'S PART NUMBER
4–1532129–3	010–0065–0000	Astro Tool Number 810D1■●
3–1532136–9 8–1532137–3	010–0134–0000 (Setting #1) 001–0104–0000 (Locator)	DANIELS™ #MH750● (Setting #1) #P79 (Locator)

Figure 5

Step 7

Slide housing insulator over contact and press over cable insulator as shown in Figure 6.

NOTE *This applies only for connectors with housing insulator packed loose.*

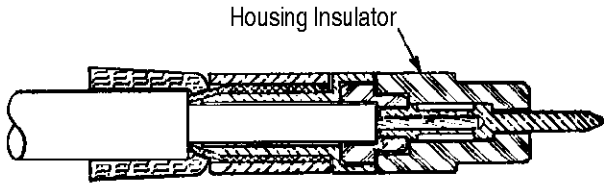

Figure 6

Step 8

Slide housing (jacks) or housing subassembly (plugs) over assembly as shown in Figure 7. Make sure it is properly fitted and in as far as possible. Rotate while pushing to secure a tight fit.

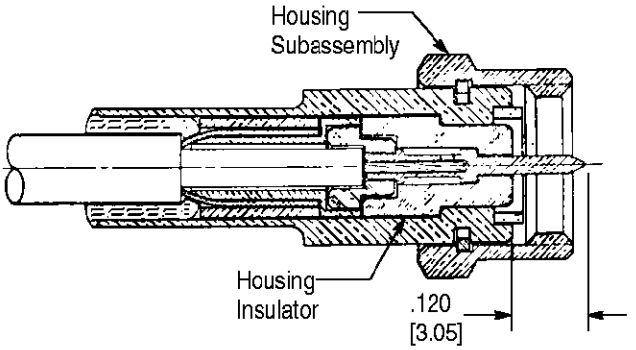

Figure 7

Crimp rear of housing with proper housing crimp tool listed in Figure 8.

TYCO ELECTRONICS PART NO.	MICRODOT PART NO.	THOMAS & BETTS™● PART NO.	MAX. CABLE DIA.
4–1532129–4	010–0081–0000	WT–400	.088 [2.24]
4–1532129–5	010–0082–0000	WT–402	.110 [2.79]
3–1532136–7	010–0083–0000	WT–406	.155 [3.94]

Figure 8

This completes plug assembly. See Step 9 for jacks.

Step 9

Locate the rubber gasket in the relief directly behind the mating threads as shown in Figure 9.

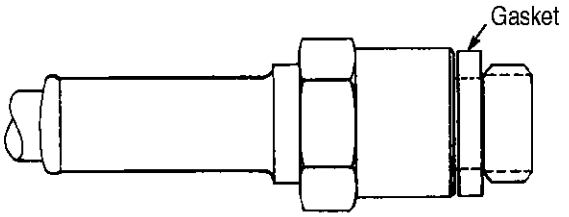

Figure 9

Notes: *(Unless otherwise specified)*

Test Voltage – 1000 V.R.M.S.
Insulation Resistance – 5.0 x 10^9 Ohms Min.

REVISION SUMMARY

Per EC 0990–0803–01

- Initial release of instruction sheet

■ Product of Astro Tool Corp. ● Consult manufacturer's literature for current information.