NUMBER C-440386

3RD ANGLE PROJECTION

METRIC

	NAME	AMP P/N	ID MARK	WIRE RANGE	øD1	F	L	øD2	l1	t	ød2	l2	MATERIAL	COLOR	QTY	BOX SIZE
	CE1-94V2	1-440386-1	CE 1	⚠6 1.0~1.75mm² ⚠7 0.3(AWG#22) 0.5(AWG#20) 0.75(AWG#18) 1.25(AWG#16)	4.8 ±0.3	13.5 ±0.5	21.0 ±1.0	8.0 ±0.5	7.0 ±0.5	0.5 ±0.02	2.3 ±0.2	8.5 ±0.5	UL 94V2	NATURAL	1,000	PM2
⚠8 OBSOLETE	CE1-94V0	~~1-440386-2~~	CE 1		4.8 ±0.3	13.5 ±0.5	21.0 ±1.0	8.0 ±0.5	7.0 ±0.5	0.5 ±0.02	2.3 ±0.2	8.5 ±0.5	UL 94V0	WHITE	1,000	PM2
	CE2-94V2	2-440386-1	CE 2	⚠6 1.0~3.0mm² ⚠7 0.5(AWG#20) 0.75(AWG#18) 1.25(AWG#16) 2.0(AWG#14)	5.5 ±0.3	13.5 ±0.5	22.0 ±1.0	8.5 ±0.5	7.0 ±0.5	0.45 ±0.02	3.1 ±0.2	9.5 ±0.5	UL 94V2	NATURAL	1,000	PM2
⚠8 OBSOLETE	CE2-94V0	~~2-440386-2~~	CE 2		5.5 ±0.3	13.5 ±0.5	22.0 ±1.0	8.5 ±0.5	7.0 ±0.5	0.45 ±0.02	3.1 ±0.2	9.5 ±0.5	UL 94V0	WHITE	1,000	PM2
	CE5-94V2	5-440386-1	CE 5	⚠6 2.5~6.0mm² ⚠7 0.5(AWG#20) 0.75(AWG#18) 1.25(AWG#16) 2.0(AWG#14) 3.5(AWG#12) 5.5(AWG#10)	7.3 ±0.3	14.5 ±0.5	25.0 ±1.0	10.0 ±0.5	7.5 ±0.5	0.7 ±0.02	4.0 ±0.2	11.5 ±0.5	UL 94V2	NATURAL	500	PM2
⚠8 OBSOLETE	CE5-94V0	~~5-440386-2~~	CE 5		7.3 ±0.3	14.5 ±0.5	25.0 ±1.0	10.0 ±0.5	7.5 ±0.5	0.7 ±0.02	4.0 ±0.2	11.5 ±0.5	UL 94V0	WHITE	500	PM2
	CE8-94V2	~~8-440386-1~~	CE 8	⚠6 4.0~9.0mm² ⚠7 0.5(AWG#20) 0.75(AWG#18) 1.25(AWG#16) 2.0(AWG#14) 3.5(AWG#12) 5.5(AWG#10)	9.15 ±0.3	18.0 ±0.5	29.0 ±1.0	12.0 ±0.5	8.5 ±0.5	1.25 ±0.02	4.4 ±0.2	12.0 ±0.5	UL 94V2	NATURAL	250	PM2
	CE8-94V0	~~8-440386-2~~	CE 8		9.15 ±0.3	18.0 ±0.5	29.0 ±1.0	12.0 ±0.5	8.5 ±0.5	1.25 ±0.02	4.4 ±0.2	12.0 ±0.5	UL 94V0	WHITE	250	PM2

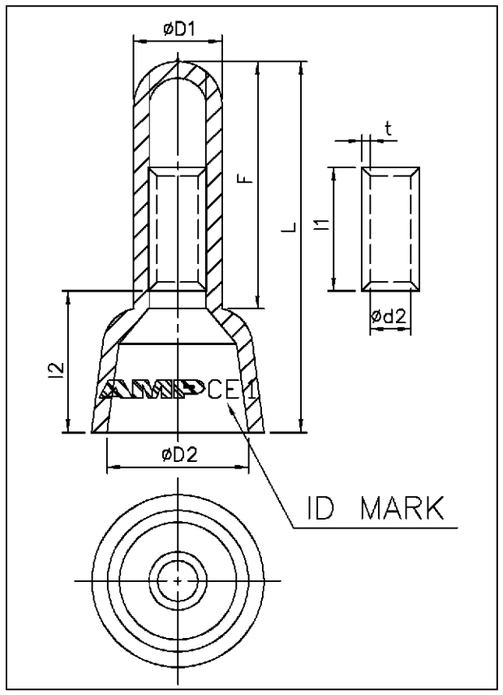

NOTE :

1. TERMINAL : NYLON INSULATED WITH TUBULAR
2. BASIC TERMINALS MATERIAL :
   FINE GRADE HIGH CONDUCTIVITY COPPER PER JIS H3300
3. INSULATION MATERIAL : NYLON (SEE TABLE).
4. MAXIMUM TEMPERATURE : -40°Cto105° C
5. PLATING : TIN PLATED [2.5um MIN]

⚠6 CROSS SECTIONAL AREA (TOTAL)

⚠7 0.3mm²~0.5mm² WILL BE CRIMPED WITH DOUBLE WIRE SIZE. (0.3X2, 0.5X2)

⚠8 **OBSOLETE PARTS: OBSOLETE CIS STREAMLINING PER D.RENAUD/D.SINISI**

LTR	REVISION RECORD	ECN	DR / CHK	DATE
D1	REVISED PER ECO-09-026346	—	KK / AEG	26NOV 09
D	REVISED	FZ00-0011-01	OH / JC	20JUN 2001
C	REVISED	FW00-0023-01	OH / JC	06MAR 2001

DIMENSION :
0 PLC ±0.5
1 PLC ±0.25
2 PLC ±0.12
3 PLC ±0.08
ANGLES ±3°

MATERIAL: SEE NOTE

FINISH: SEE NOTE

DR. O. HU 20-JUN-2001
CHK. J. CHENG 20-JUN-2001
APP. J. WU 20-JUN-2001
PRODUCT SPEC 108-57105
APPLICATION SPEC 114-57007
WEIGHT

AMP | AMP INCORPORATED. IPO

NAME: CLOSED END SPLICE TERMINAL

LOC DW | SIZE A3 | DRAWING NO C-440386 | REV D1

SCALE -- | SHEET 1 OF 2

THIS INFORMATION IS CONFIDENTIAL AND IS DISCLOSED TO YOU ON CONDITION THAT NO FURTHER DISCLOSURE IS MADE BY YOU TO OTHER THAN AMP PERSONNEL WITHOUT WRITTEN AUTHORIZATION FROM AMP (TAIWAN) LTD.
DIMENSION IN MILLMETERS. DO NOT SCALE PRINT.

PRINT DW | DIST

CUSTOMER DRAWING

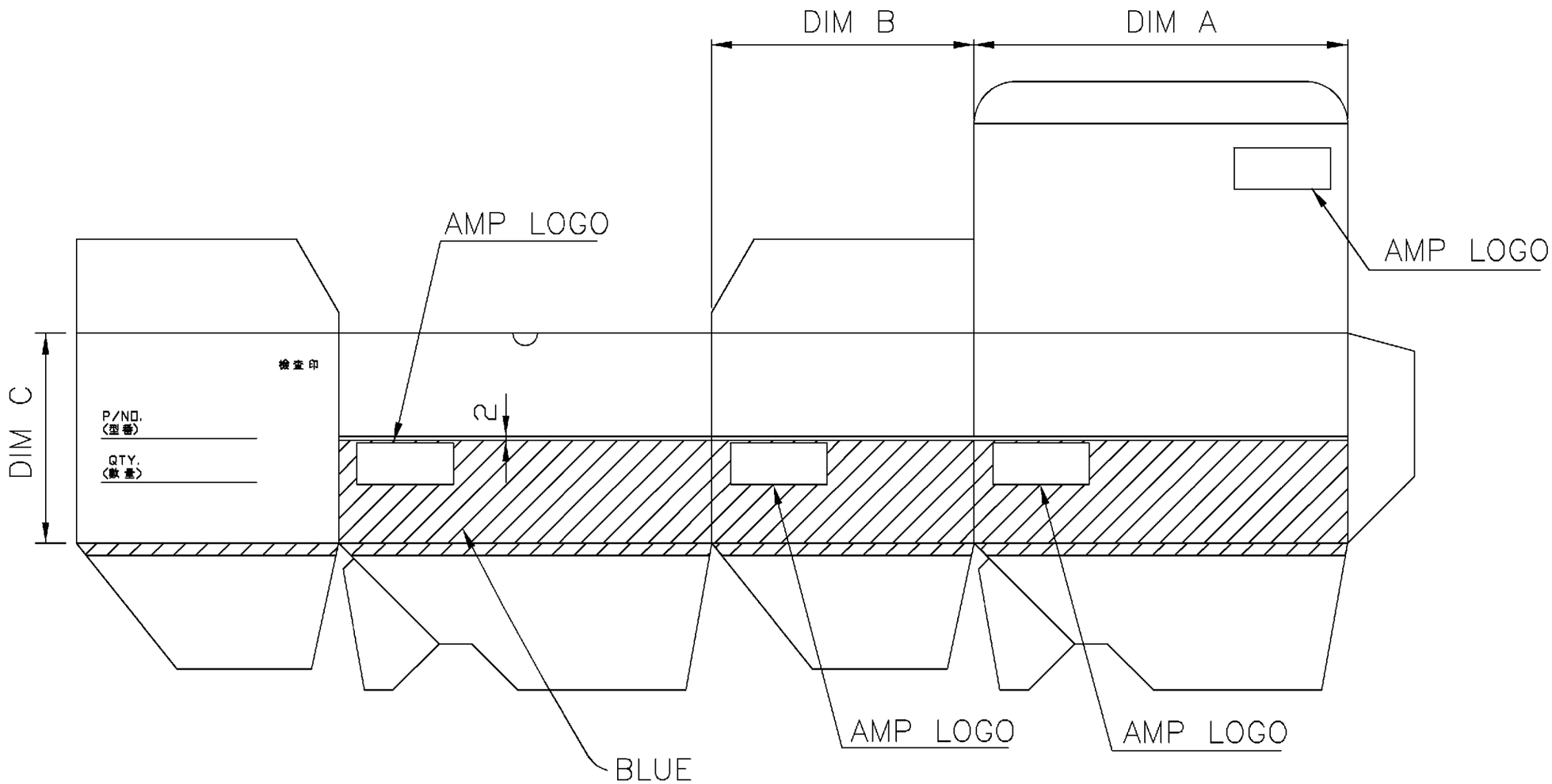

BOX SIZE	INNER	DIM A	DIM B	DIM C
PM1	PS1*10	160	115	48
PM2	PS2*10 PS3*5	160	115	96

LTR	REVISION RECORD	ECN	DR CHK	DATE
	SEE SHEET 1			

DIMENSION :
0 PLC ±0.5
1 PLC ±0.25
2 PLC ±0.12
3 PLC ±0.08
ANGLES ±3°

MATERIAL: SEE NOTE

FINISH: SEE NOTE

DR. O. HU 20-JUN-2001
CHK. J. CHENG 20-JUN-2001
APP. J. WU 20-JUN-2001
PRODUCT SPEC
APPLICATION SPEC
WEIGHT

AMP | AMP INCORPORATED. IPO

NAME: CLOSED END SPLICE TERMINAL

LOC	SIZE	DRAWING NO	REV
DW	A3	C-440386	D1

SCALE: --
SHEET: 2 OF 2

CUSTOMER DRAWING

NUMBER C-440386
3RD ANGLE PROJECTION
METRIC

THIS INFORMATION IS CONFIDENTIAL AND IS DISCLOSED TO YOU ON CONDITION THAT NO FURTHER DISCLOSURE IS MADE BY YOU TO OTHER THAN AMP PERSONNEL WITHOUT WRITTEN AUTHORIZATION FROM AMP (TAIWAN) LTD.
DIMENSION IN MILLMETERS. DO NOT SCALE PRINT.

PRINT DW DIST