HD-20 All-Plastic Right-Angle Posted Connectors 590 Mount (Continued)

Post Size—.026 [0.66] Dia.

With Threaded Insert

With Female Screwlocks

Plug—Without Boardlocks

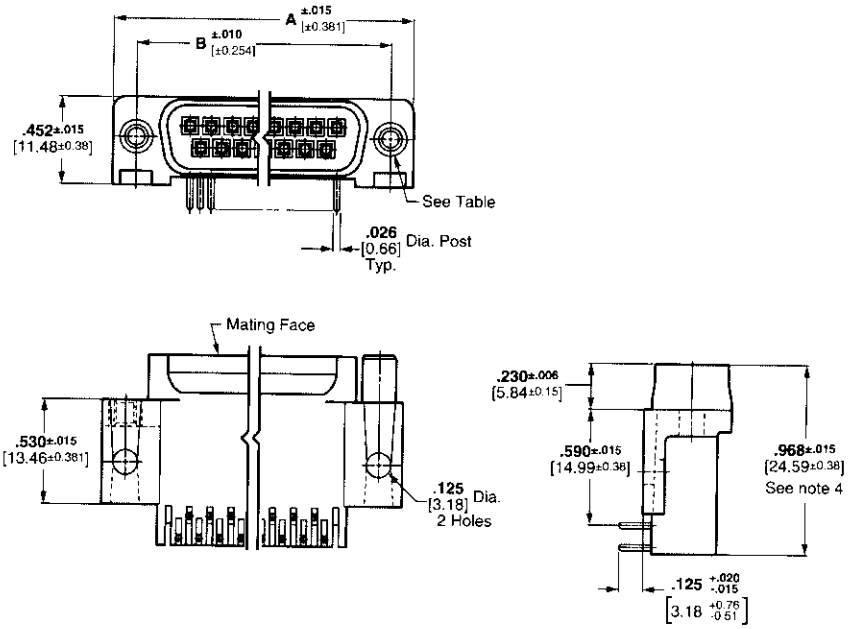

Material and Finish:

Housing—94V-0 rated thermoplastic, black

Threaded Inserts—Zinc, chromate coated

Female Screwlocks—Zinc, chromate coated

Pin Contacts (Posted)—Brass, duplex plated as follows:
A—.000030 [0.00076] gold on mating end, tin-lead on termination end, with entire contact nickel underplated
B—Gold flash on mating end, tin-lead on termination end, with entire contact nickel underplated

Technical Documents:

Product Specification—108-40025
Application Specification—114-40015

See customer drawings for printed circuit board layouts.

Shell Size	No. of Contact Positions	Dimensions A	Dimensions B	Contact Finish (Plating Code)	Part Numbers: With Threaded Inserts	Part Numbers: With Fixed Female Screwlocks	Part Numbers: With .125 [3.18] Mounting Holes
1	9	**1.213** 30.81	**.984** 24.99	A	747467-4	—	747467-2
				B	—	—	747467-1
2	15	**1.541** 39.14	**1.312** 33.32	A	748872-1	748952-1	747468-2
3	25	**2.090** 53.09	**1.852** 47.04	A	748873-1	748953-1	748826-1
				B	—	—	748826-2
4	37	**2.729** 69.32	**2.500** 63.50	A	—	—	747470-2
5	50	**2.635** 66.93	**2.406** 61.11	A	—	—	206971-1
				B	—	—	206971-2

Notes: 1. All plug connectors are preloaded with size 20 DF posted pin contacts.
2. Recommended pc board thickness is .093 [2.36] max.
3. Male screw retainers are used as mating hardware for connectors with 4-40 female screwlocks.
4. Dimension is 1.115 [28.32] for size 5 d-subs, GPL244.

Dimensions are in inches and millimeters unless otherwise specified. Values in brackets are metric equivalents.

Dimensions are shown for reference purposes only. Specifications subject to change.

USA: 1-800-522-6752
Canada: 1-905-470-4425
Mexico: 01-800-733-8926
C. America: 52-55-5-729-0425

South America: 55-11-3611-1514
Hong Kong: 852-2735-1628
Japan: 81-44-844-8013
UK: 44-141-810-8967