NOTE *All numerical values are in metric units [with U.S. customary units in brackets]. Dimensions are in millimeters [and inches]. Unless otherwise specified, dimensions have a tolerance of ±0.13 [.005] and angles have a tolerance of ±2°. Figures and illustrations are for identification only and are not drawn to scale.*

1. INTRODUCTION

This specification covers requirements for the application of AMP* AMPLIMITE HD–20 Series 318, 478, and 590 Right–Angle All Plastic Housing Connectors designed for printed circuit (pc) boards. The series designator is the dimension from the center of the first row of solder tines to the front surface of the mounting flange. Connectors are available with mounting flanges that have through holes, threaded inserts, or nonremovable screwlocks.

These connectors are made in five sizes: size 1 has 9 positions; size 2 has 15 positions; size 3 has 25 positions; size 4 has 37 positions; and size 5 has 50 positions.

Connector receptacles are available in sizes 1, 2, 3, and 4 in Series 318. Connector plugs and receptacles are available in sizes 1, 2, 3, and 4 in Series 478. Plugs and receptacles are available in sizes 1, 2, 3, 4, and 5 in series 590. Sizes 1, 2, 3, and 4 have round solder tines and size 5 has square solder tines. The plugs contain pin contacts and the receptacles contain socket contacts.

Figure 1 shows the product components and terms of their features. These terms will be used throughout this specification. Use these terms when corresponding with AMP Representatives to facilitate assistance. The connector illustrations present composites of mounting options and do not depict actual applications.

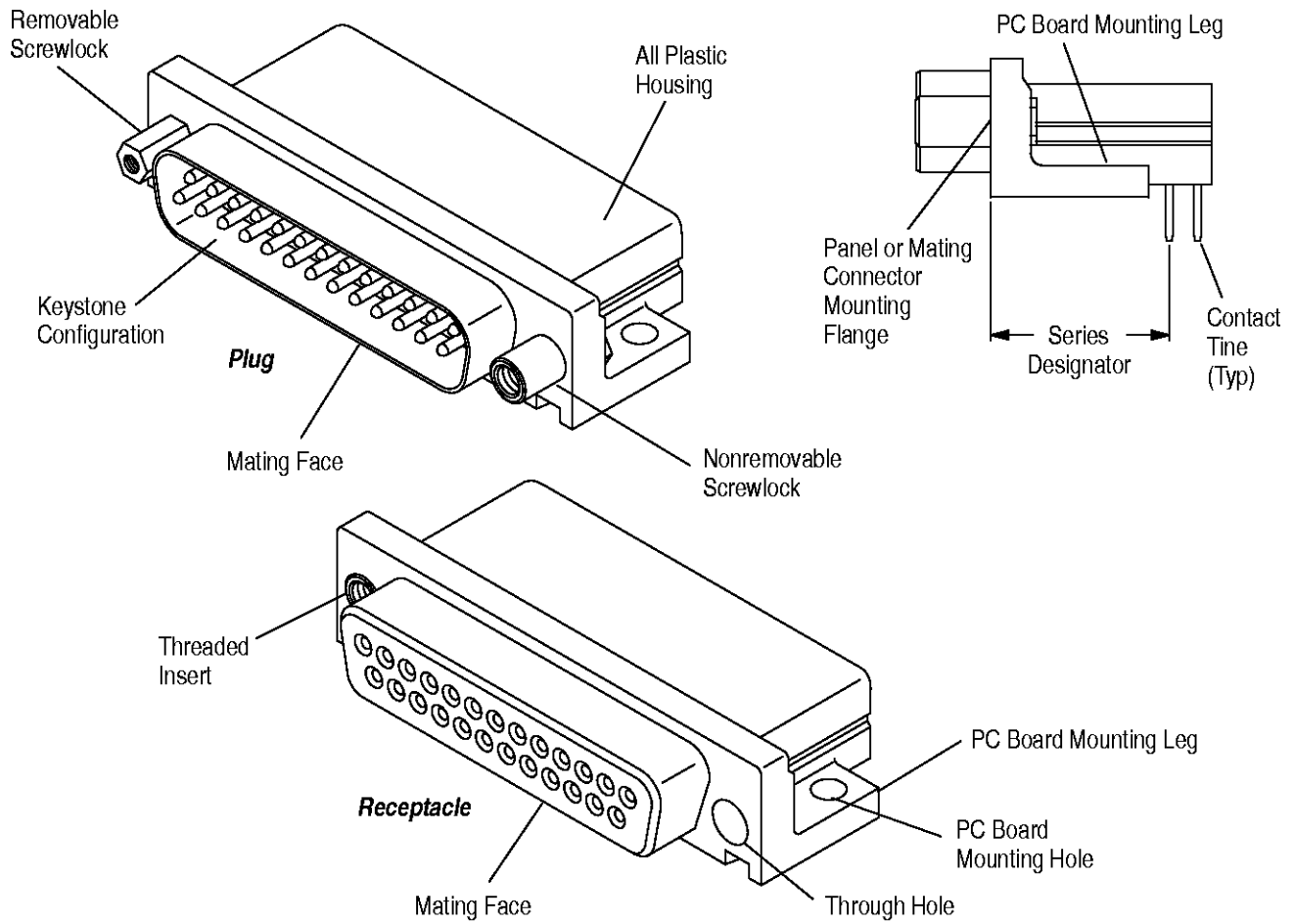

Figure 1

2. REFERENCE MATERIAL

2.1. Revision Summary

This paragraph is reserved for a revision summary covering the most recent additions and changes made to this specification which include the following:

Per EC 0990–1438–98:

- Updated specification to corporate requirements
- Updated table in Figure 3 to add second "G" dimension

2.2. Customer Assistance

Product Part Number 747460 and Product Code 5765 are representative of AMPLIMITE HD–20 Right–Angle All Plastic Connectors. Use of these numbers will identify the product line and expedite your inquiries through an AMP service network established to help you obtain product and tooling information. Such information can be obtained through a local AMP Representative (Field Service Engineering, Field Applications Engineer, etc.) or, after purchase, by calling the Tooling Assistance Center or AMP FAX number at the bottom of page 1.

2.3. Drawings

AMP Customer Drawings for each product part number are available from the service network. The information contained in Customer Drawings takes priority if there is a conflict with this specification or with any technical documentation supplied by AMP Incorporated.

2.4. Product Specifications

AMP Product Specification 108–40025 provides product performance information.

2.5. Soldering Information

AMP Corporate Bulletin No. 401–52 is available upon request and can be used as a guide in soldering. This bulletin provides information on various flux types and characteristics along with commercial designations and flux removal procedures. A checklist is attached to the bulletin as a guide for information on soldering problems.

3. REQUIREMENTS

3.1. Storage

A. Ultraviolet Light

Prolonged exposure to ultraviolet light may deteriorate the chemical composition used in connectors.

B. Shelf Life

The connectors should remain in the shipping containers until ready for use to prevent damage. The products should be used on a first in, first out basis to avoid storage contamination that could adversely affect signal transmissions.

C. Chemical Exposure

Do not store connectors near any chemicals listed below, as they may cause stress corrosion cracking in the components.

Alkalies	Ammonia	Citrates	Phosphates Citrates	Sulfur Compounds
Amines	Carbonates	Nitrites	Sulfur Nitrites	Tartrates

NOTE *Where the above environmental conditions exist, phosphor–bronze contacts are recommended instead of brass if available.*

3.2. Connector Shell Sizes

There are five industry standard shell sizes available for these connectors. A composite of the five receptacle sizes with the overall dimension for each is provided in Figure 2.

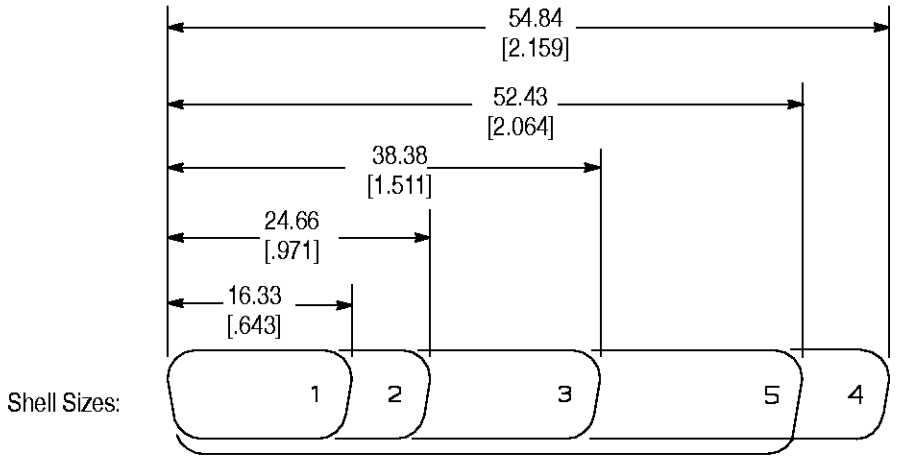

Figure 2

3.3. Panel Mounting Cutout

Panel mounting is optional for AMPLIMITE Right–Angle All Plastic Housing PC Board Connectors. It will provide additional support for the solder joints during mating and unmating of connectors. The pc board receptacles can ONLY be rear mounted. Either front or rear mounting is acceptable for the mating cable connector. Connectors that have mounting flanges with 4–40 threaded inserts will accept threaded screwlocks or panel mounting screws. Hardware attached to the connector mounting flange shall be tightened to 0.45 N•m (4 in.–lb) maximum. See Figure 3 for panel cutout dimensions.

Removable screwlocks are designed to secure a connector to a panel 1.58 [.062] thick. They can be used with thinner panels; however, washers are recommended to make up the thickness difference and provide a bottoming surface for the mating connector flange. These screwlocks should be tightened to a torque of 0.45 N•m (4 in.–lb) maximum. The 4–40 internal threads in the screwlocks will accept commercially available 4–40 threaded screws and jackscrews.

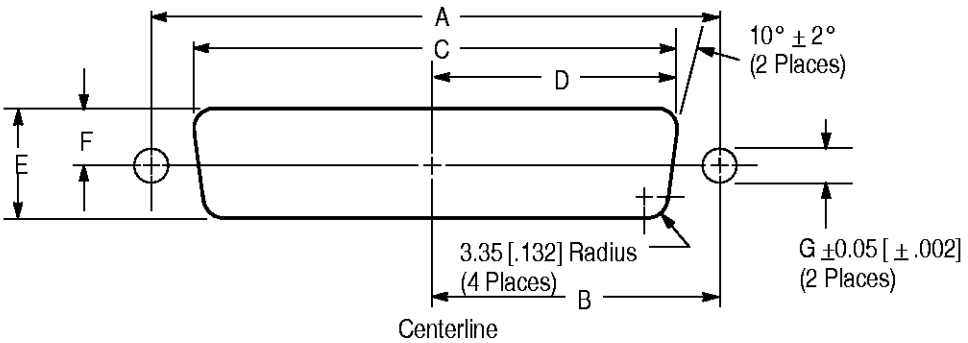

SHELL SIZE	DIMENSIONS							
	A	B	C	D	E	F	G	
							WITHOUT SCREWLOCKS	WITH SCREWLOCKS
1	24.99 [0.984]	12.50 [0.492]	20.47 [0.806]	10.24 [0.403]	11.40 [0.449]	5.72 [0.225]	3.05 [0.120]	4.83 [0.190]
2	33.32 [1.312]	16.66 [0.656]	28.80 [1.134]	14.40 [0.567]				
3	47.04 [1.852]	23.52 [0.926]	42.52 [1.674]	21.26 [0.837]				
4	63.50 [2.500]	31.75 [1.250]	59.08 [2.326]	29.54 [1.163]				
5	61.11 [2.406]	30.56 [1.203]	56.34 [2.218]	28.17 [1.109]	14.10 [0.555]	7.06 [0.278]		

Figure 3

3.4. Mating Dimensions

The dimensions shown in Figure 4 must be considered when determining method of mounting and thickness of the panel when connectors are to be panel–mounted. This dimension assures full mating of connectors.

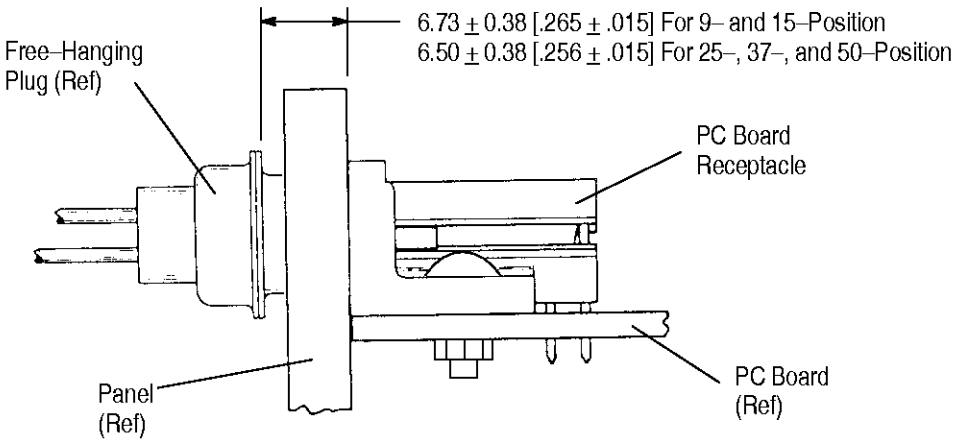

Figure 4

3.5. Connector Spacing

Care must be used to avoid interference between adjacent connectors and/or other components. The dimension is dependent on variable hardware used and the clearance required for mating connectors. The information provided in Figure 5 is to ensure proper mating for manual placement of connectors.

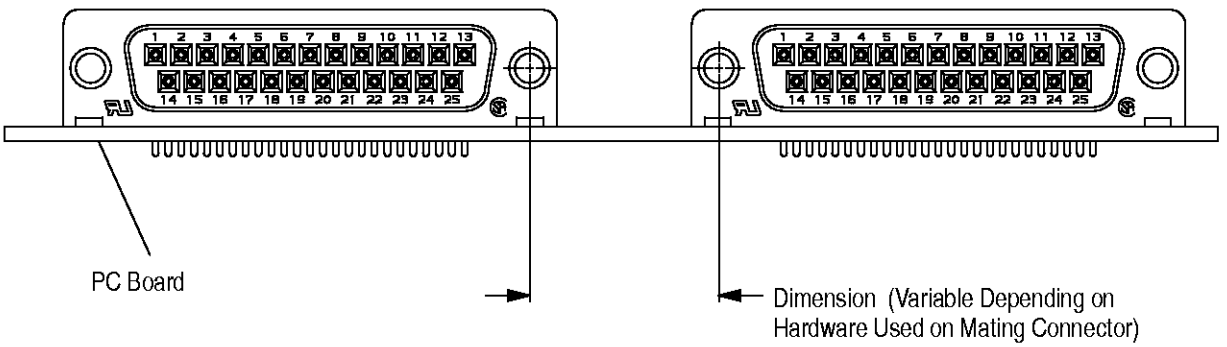

Figure 5

3.6. Printed Circuit Board

A. Thickness

These connectors are designed to accommodate a range of applications. Standard connectors are designed for up to 2.36 [.093] maximum thick pc boards.

B. Layout

Solder tines require precisely drilled holes. See Figure 6 for dimensions.

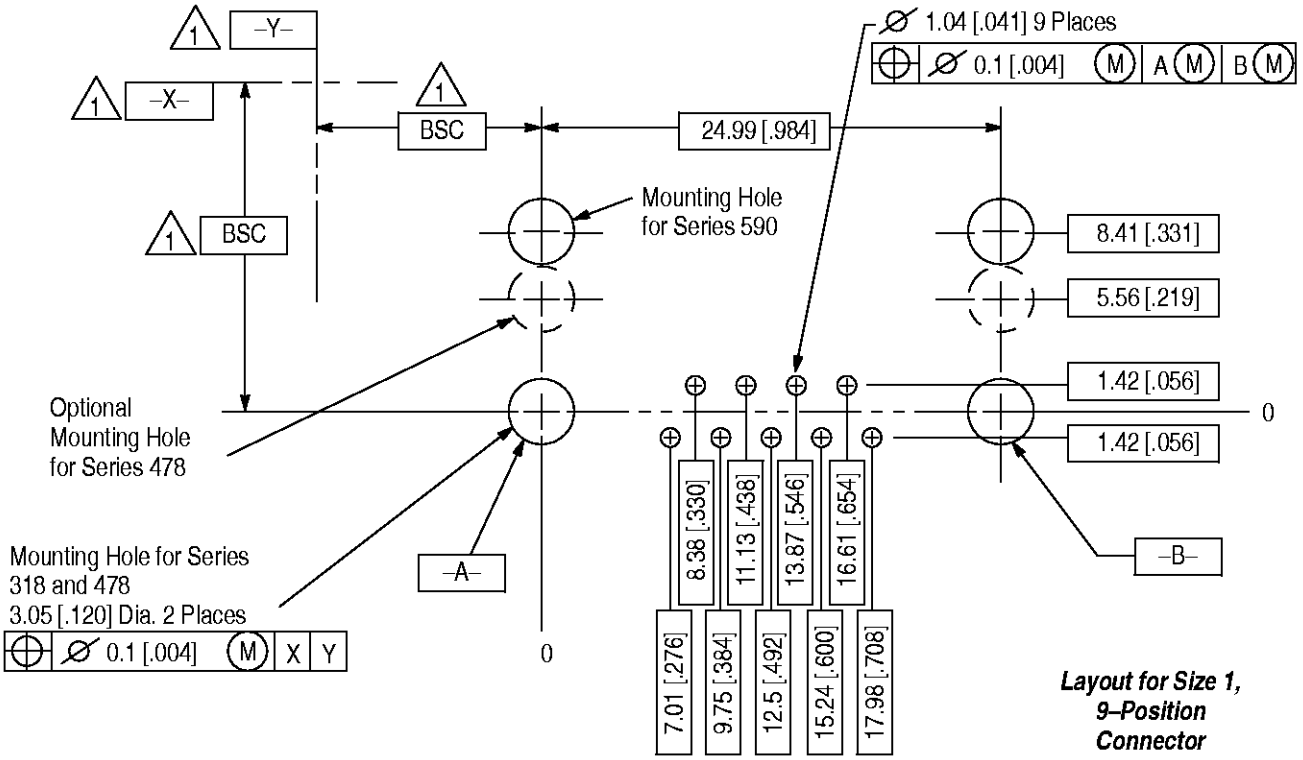

Layout for Size 1, 9–Position Connector

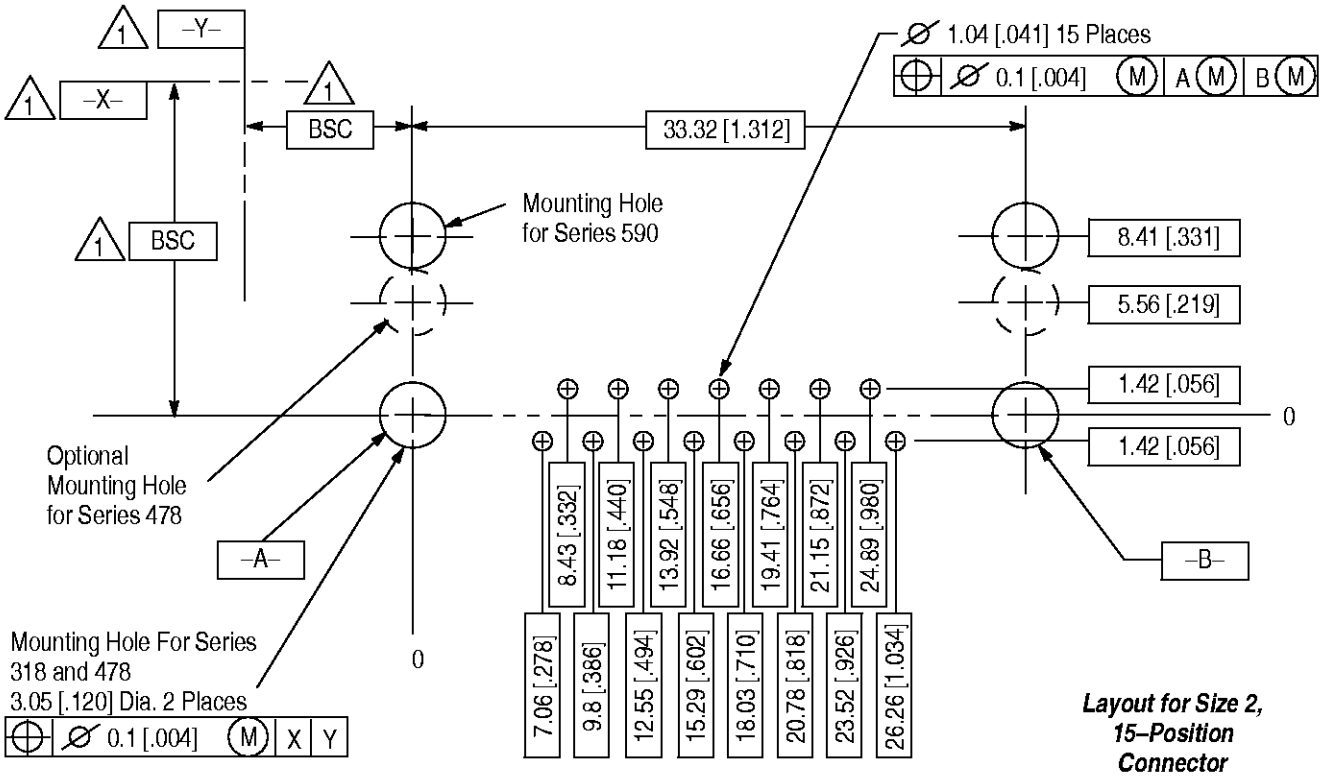

Layout for Size 2, 15–Position Connector

1 Datums and Basic Dimensions Established by Customer

Figure 6 (cont'd)

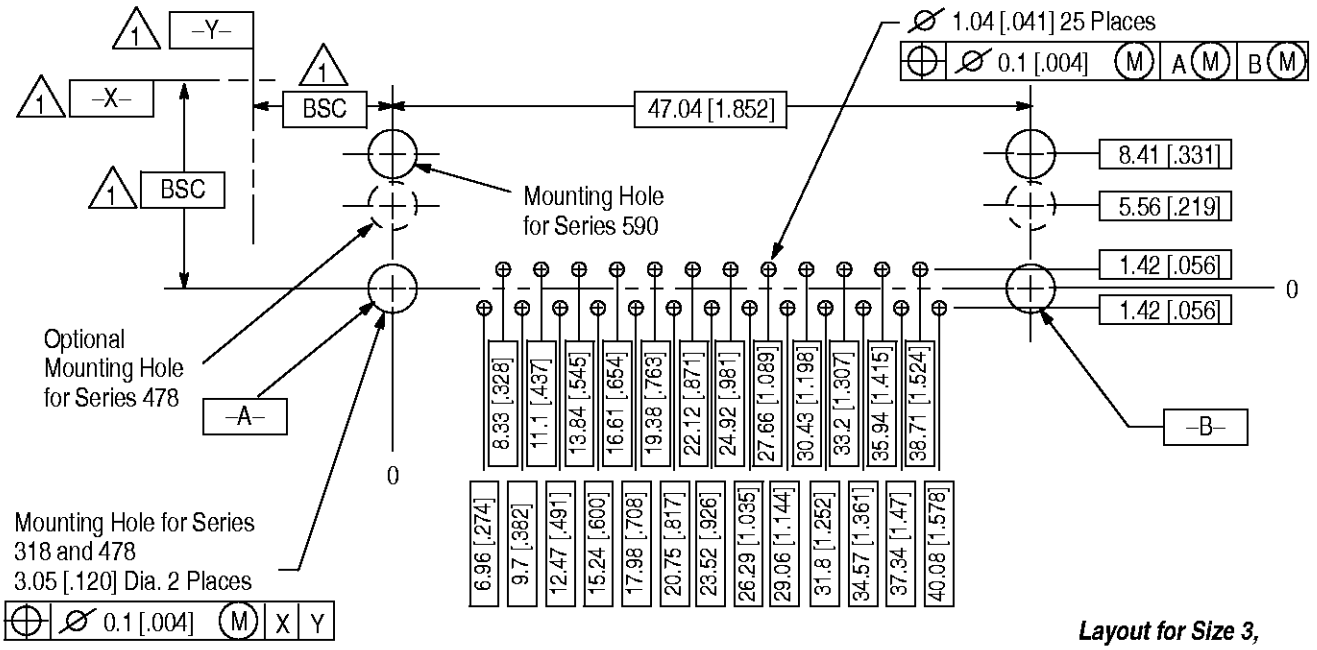

Layout for Size 3, 25–Position Connector

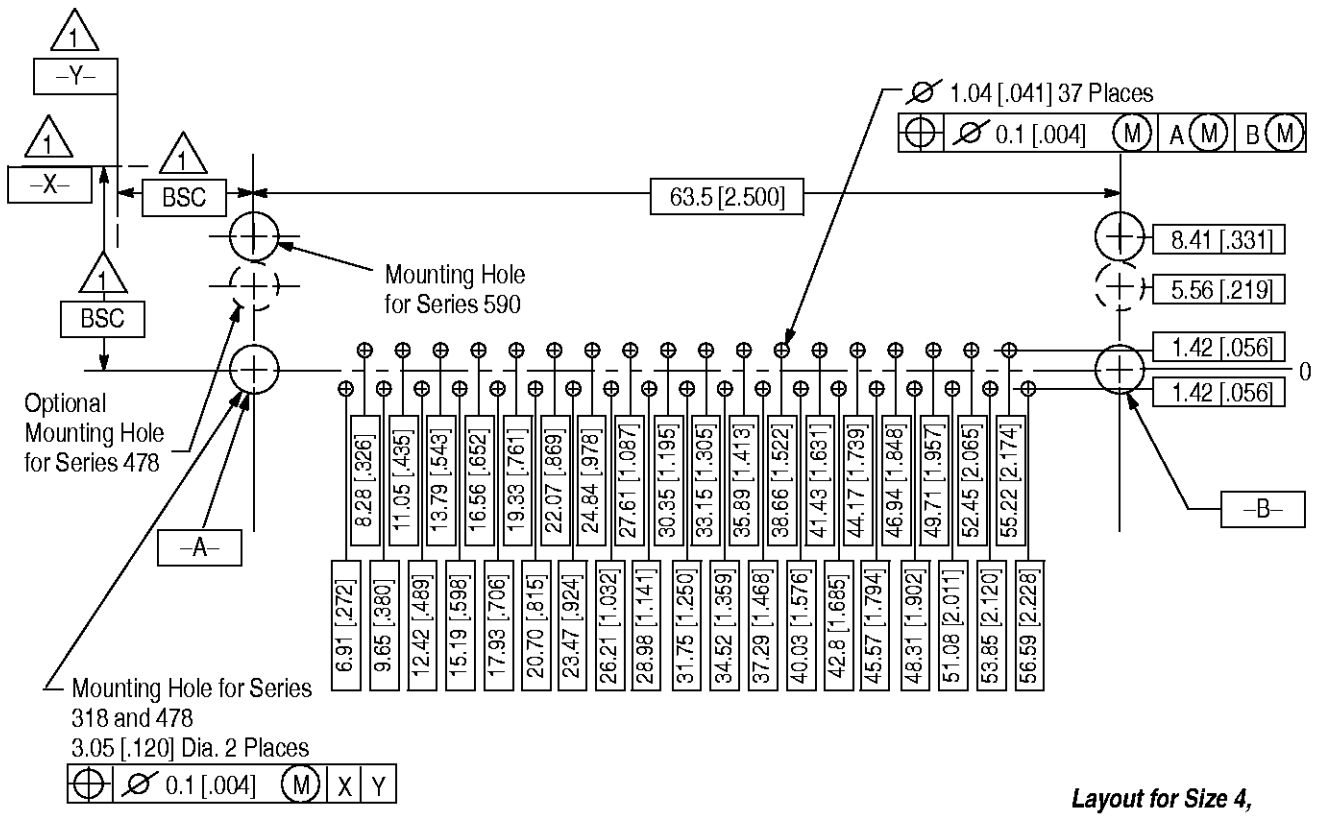

Layout for Size 4, 37–Position Connector

1 Datums and Basic Dimensions Established by Customer

Figure 6 (cont'd)

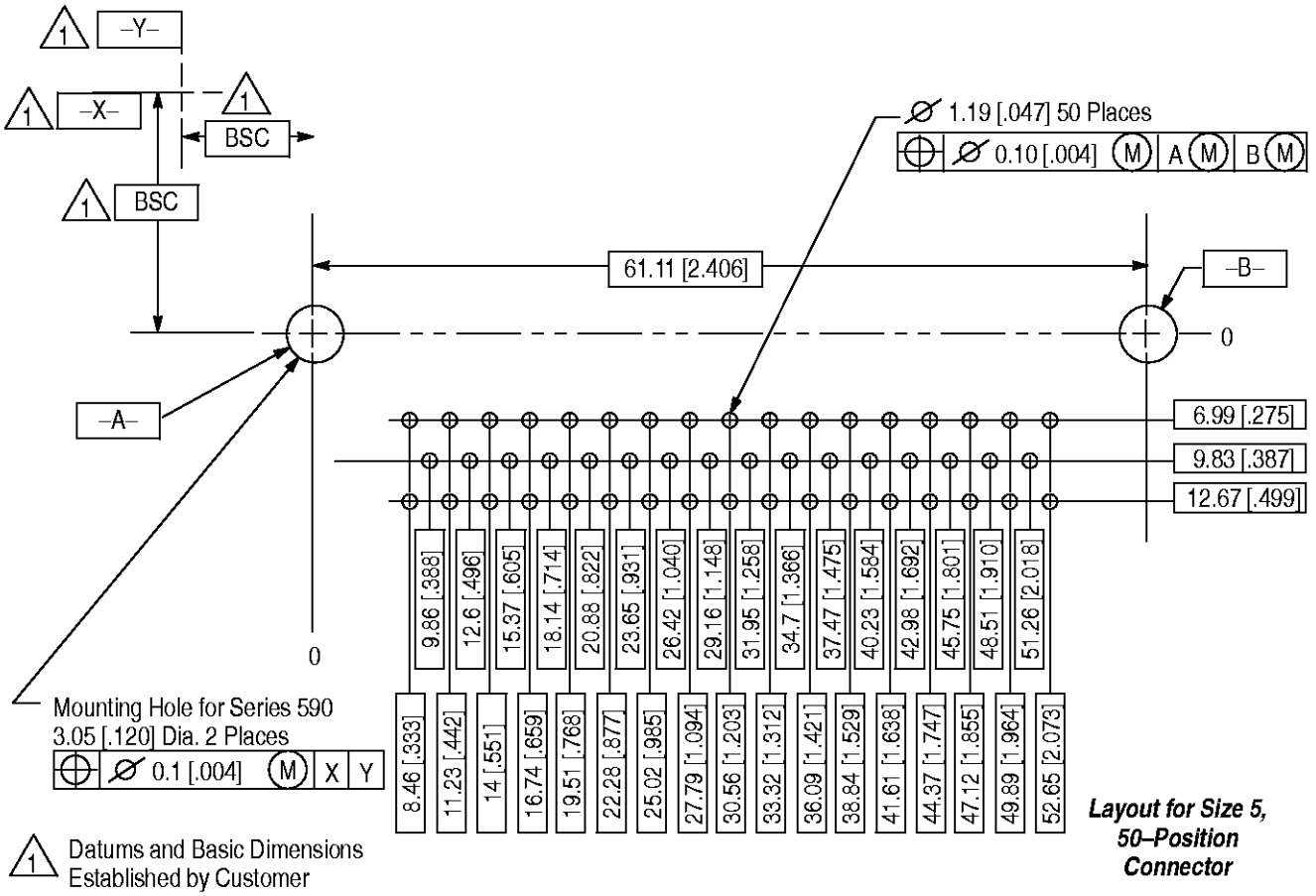

Figure 6 (end)

3.7. PC Board Contact Tine Holes

These connectors may be used with or without plated through holes. If plated, the drilled hole size, plating types, and plating thickness are dependent on your application requirements. The finished hole size must be as stated to provide unrestricted insertion and ensure adequate application of solder to the tines. See Figure 7.

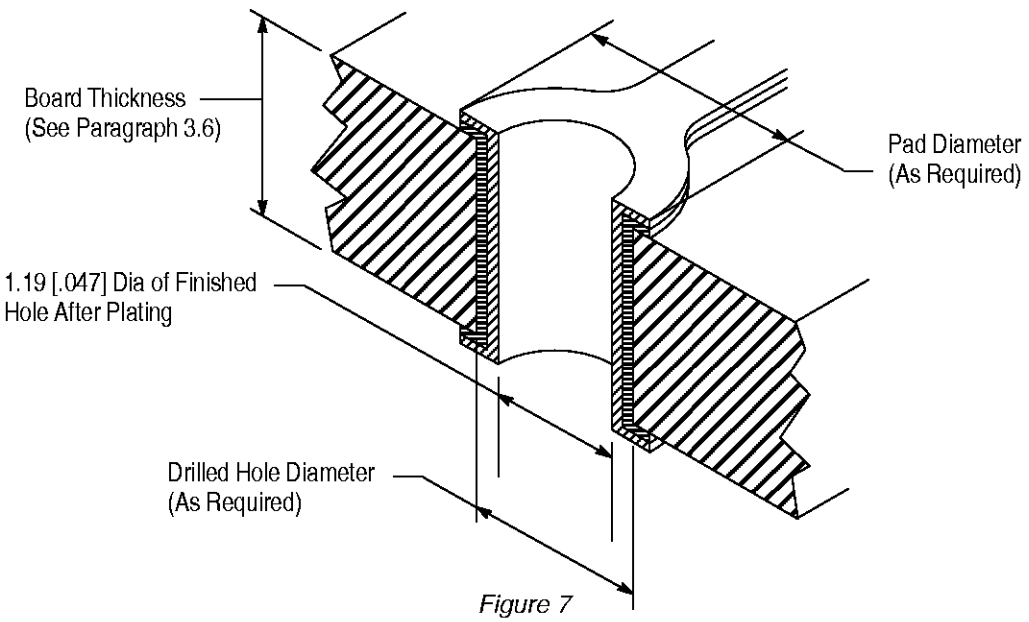

Figure 7

3.8. Limitations

Use the product specification referenced in Paragraph 2.4. for testing procedures and limitations regarding these connectors.

3.9. Polarizing and Keying

The keystone configuration of the connector mating face prevents the accidental inversion of mating connectors. To prevent mismating of same size connectors, keying plugs may be placed in the receptacle connector. See Figure 8.

NOTE *If keying plug is used, the corresponding pin cavity in the mating plug connector MUST BE EMPTY.*

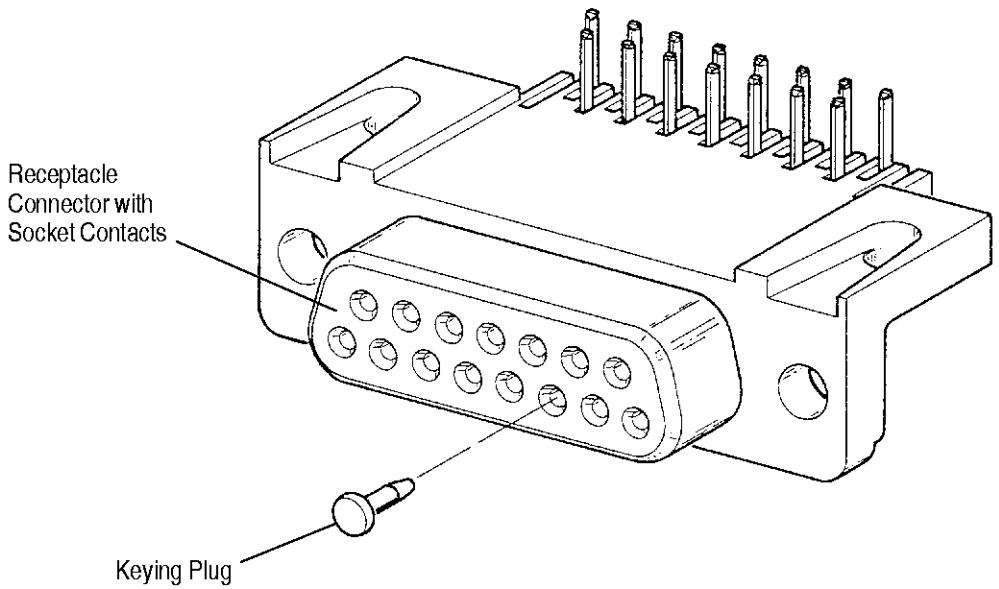

Figure 8

3.10. Integral Mounting Hardware

The connector may be affixed to the pc board using hardware such as screws, washers, and nuts; rivets; or similar devices. The hardware may be purchased from AMP or through a commercial supplier.

If designing a connector into a system with commercially available hardware, contact the Product Information number on page 1 for design assistance.

3.11. Ancillary Items (See Figure 9)

A. Screwlocks

Removable or nonremovable screwlocks provide a means of securing mating connectors with commercially available 4–40 threaded hardware. The torque limit is 0.23 N•m [2 in–lb] applied from the mating face side. The maximum pushout force is 89 N [20 lb–force] applied from the mating face side.

B. Inserts

Connectors with nonremovable 4–40 threaded inserts in the mounting flange allow the connector to be mounted to a panel with commercially available 4–40 hardware. The torque limit is .45 N•m [4 in–lb] applied from the mating face side. The maximum pushout force is 89 N [20 lb], applied from the mating face side.

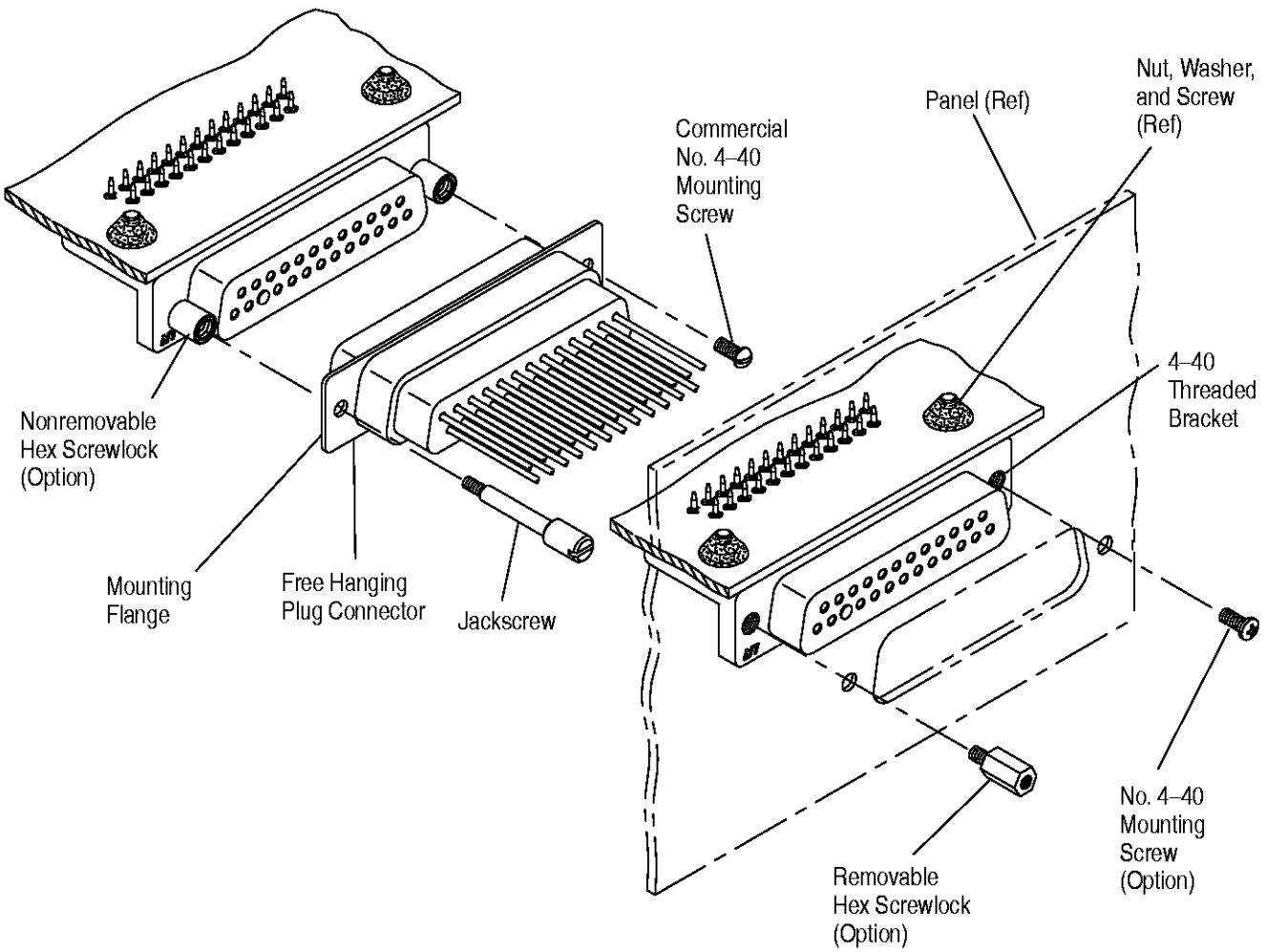

Figure 9

NOTE *The illustrations show a combination of different types of hardware. In an actual application, identical hardware should be used on both mounting flanges.*

3.12. Connector Placement

CAUTION *The connector should be handled only by the housing to avoid deformation, contamination, or other damage to the contact solder tines.*

Determine which hole in the pc board is to receive the number one contact solder tine, then orient the connector so the number one tine is aligned with the hole. Start all tines into the board; then, press evenly on the connector until the flange seats on the pc board.

3.13. Soldering

A. Flux Selection

Contact solder tines must be fluxed prior to soldering with a mildly active, rosin base flux. Selection of the flux will depend on the type of pc board and other components mounted on the board. Additionally, the flux must be compatible with the wave solder line, manufacturing, health, and safety requirements. Call the Product Information phone number at the bottom of page 1 for consideration of other types of flux. Some fluxes that are compatible with these connectors are provided in Figure 10.

FLUX TYPE	ACTIVITY	RESIDUE	COMMERCIAL DESIGNATION	
			KESTER⊞	ALPHA■
Type RMA (Mildly Activated)	Mild	Noncorrosive	186	611

⊞ Product of Kester Solder Co. ■ Product of Alphametals Inc.

Figure 10

B. Soldering Guidelines

AMPLIMITE Right–Angle All Plastic Housing PC Board Connectors can be soldered using wave or equivalent soldering techniques. The temperatures and exposure time shall be within the ranges specified in Figure 11. We recommend using SN60 or SN62 solder for these connectors.

NOTE *AMP Corporate Bulletin 401–52 provides some guidelines for establishing soldering practices.*

SOLDERING PROCESS	TEMPERATURE		TIME (At Max Temp)
	CELSIUS	FAHRENHEIT	
WAVE SOLDERING	260⁘	500⁘	5 Seconds

⁘ Wave Temperature

Figure 11

C. Cleaning

After soldering, removal of fluxes, residues, and activators is necessary. Consult with the supplier of the solder and flux for recommended cleaning solvents. The following is a listing of common cleaning solvents that will not affect the connectors for the time and temperature specified. See Figure 12.

Cleaners must be free of dissolved flux and other contaminants. We recommend cleaning with the pc board on its edge. If using an aqueous cleaner, we recommend standard equipment such as a soak–tank or an automatic in–line machine.

DANGER *Consideration must be given to toxicity and other safety requirements recommended by the solvent manufacturer. Refer to the manufacturer's Material Safety Data Sheet (MSDS) for characteristics and handling of cleaners. Trichloroethylene and Methylene Chloride can be used with no harmful affect to the connectors; however AMP does not recommend them because of the harmful occupational and environmental effects. Both are carcinogenic (cancer–causing) and Trichloroethylene is harmful to the earth's ozone layer.*

NOTE *If you have a particular solvent that is not listed, contact the AMP FAX/Product Information number at the bottom of page 1.*

CLEANER		TIME (Minutes)	TEMPERATURES (Maximum)	
NAME	TYPE		CELSIUS	FAHRENHEIT
Alpha 2110■	Aqueous	1	132	270
Bioact EC–7◆	Solvent	5	100	212
Butyl Carbitol●	Solvent	1	Room Ambient	
Isopropyl Alcohol	Solvent	5	100	212
Kester 5778❖	Aqueous	5	100	212
Kester 5779❖	Aqueous	5	100	212
Loncoterge 520●	Aqueous	5	100	212
Loncoterge 530●	Aqueous	5	100	212
Terpene Solvent	Solvent	5	100	212

■ Product of Fry's Metals, Inc. ◆ Product of Petroferm, Inc. ● Product of Union Carbide Corp. ❖ Product of Litton Systems, Inc.

Figure 12

D. Drying

When drying cleaned connector assemblies, make certain that temperature limitations are not exceeded: –55° to 105°C [–67° to 221°F]. Excessive temperatures may cause housing degradation.

3.14. Checking Installed Connector

The AMPLIMITE Right–Angle All Plastic Housing PC Board Connector must be seated on the pc board to the dimensions shown in Figure 13.

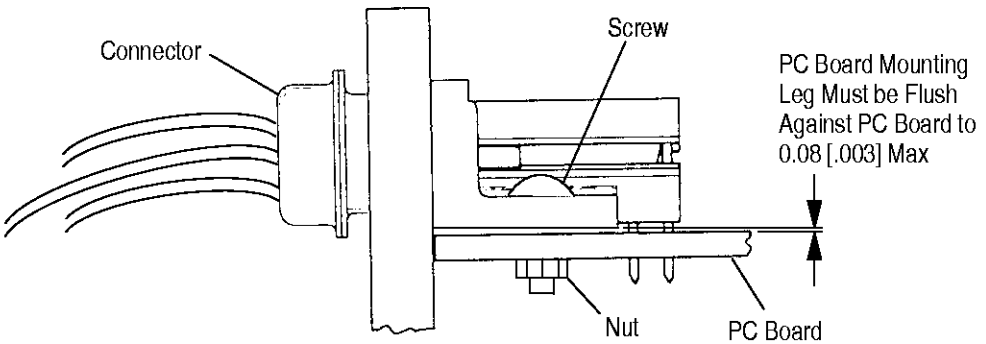

Figure 13

3.15. Repair/Removal

If the connector should become damaged, it must be replaced. The connector may be removed from the pc board by normal desoldering methods and replaced with a new connector.

CAUTION *When repairing or replacing AMPLIMITE Right–Angle All Plastic Housing PC Board Connectors, be careful not to damage other pc board components during the desoldering process.*

4. QUALIFICATIONS

AMPLIMITE HD–20 Right–Angle All Plastic Housing PC Board Connectors are recognized under the Component Program of Underwriters Laboratories Inc.(UL), File No. E28476; they are certified by the Canadian Standards Association (CSA) under File No. LR 7189.

5. TOOLING

These connectors are designed for hand placement on the pc board and require no special tool when handling them. The only concerns are to handle the connector by the flange only to avoid touching the solder tines which could deform or contaminate the tines, and to provide a backup support that will allow the contact tines to pass through the pc board without deforming them.

6. VISUAL AID

Figure 14 shows a typical application of AMPLIMITE Right–Angle All Plastic Housing PC Board Connectors. This illustration should be used by production personnel to ensure a correctly applied product. Applications which DO NOT appear correct should be inspected using the information in the preceding pages of this specification.

NOTE *A composite of various types of hardware used illustrates available options. In an actual application, hardware used to mount connector will be identical, as will the hardware used for connector mating.*

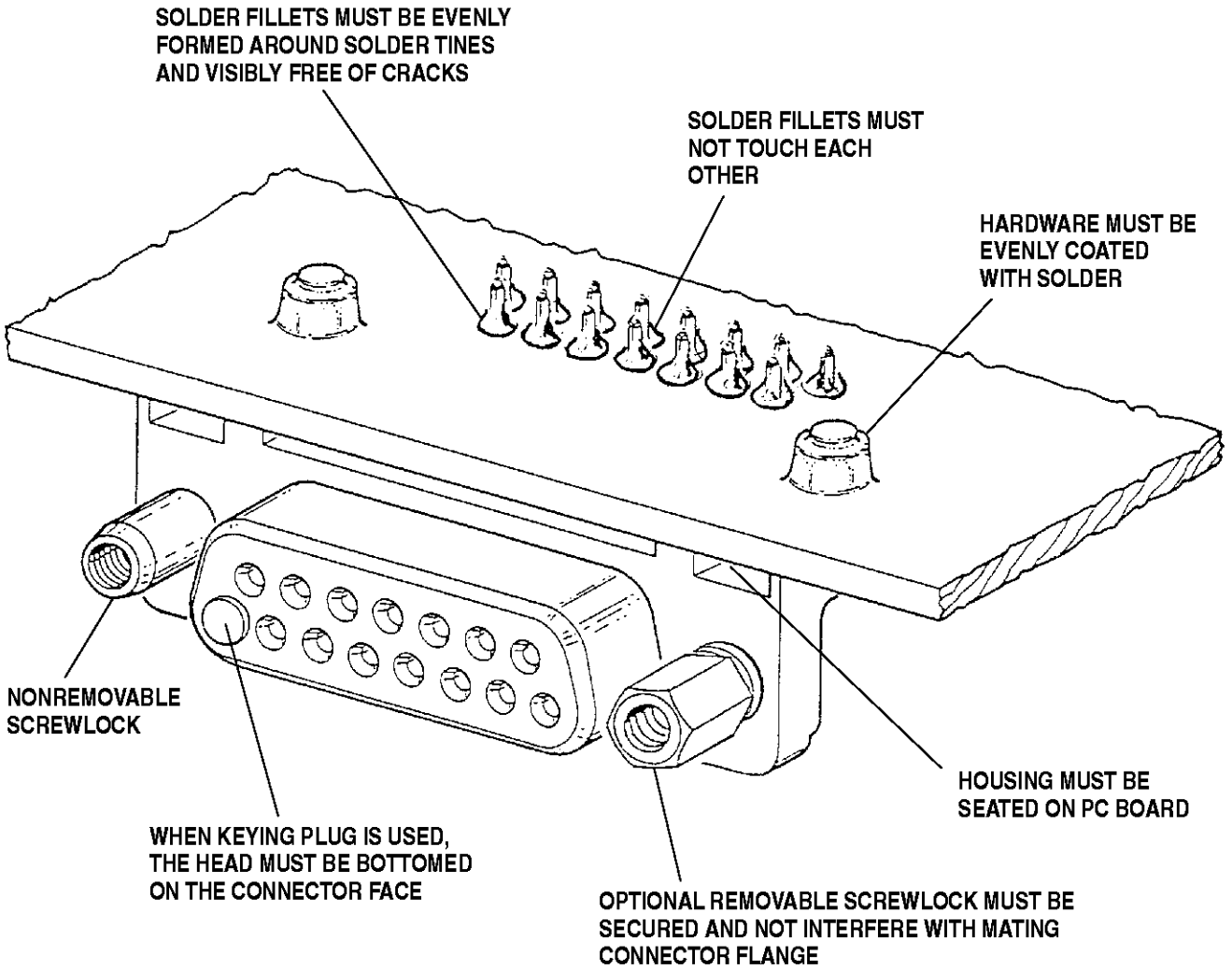

FIGURE 14. VISUAL AID