Standardausführung: V42254-A2115-C*** V42254-A2415-C***[3]
standard versions: V42254-A2117-C*** V42254-A2417-C***[3]
V42254-A2315-C*** V42254-A2515-C***[3]
V42254-A2317-C*** V42254-A2517-C***[3]

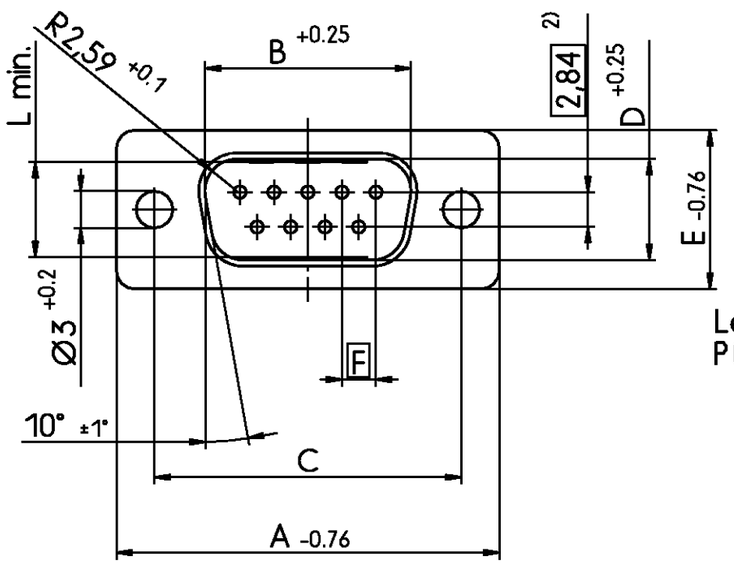

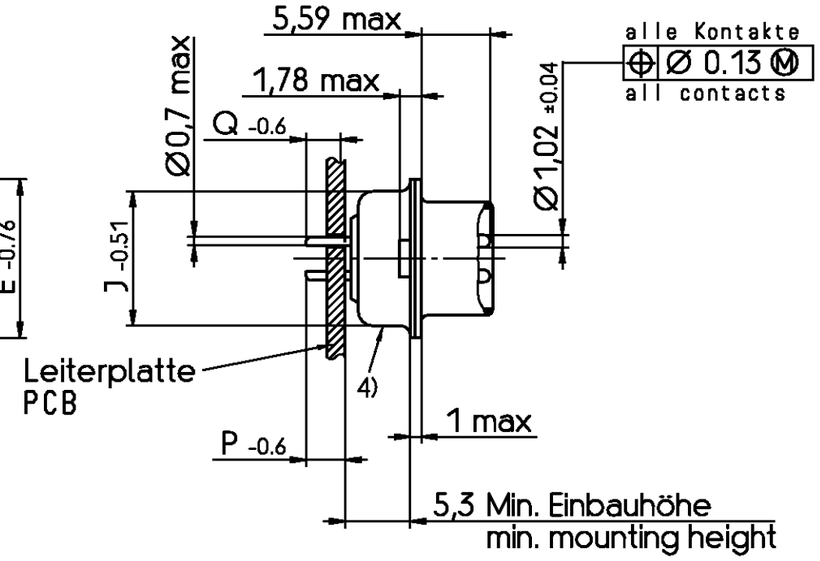

1) nach DIN 41652 T.2 und T.4
2) Bemerkung: 50-polig: dreireihig
3) nicht für 50-polig
4) keine tyco-Beschriftung bei :
V42254-A2*17-C*** V42254-A2*18-C***
V42254-A2122-C*** V42254-A2142-C***
V42254-A2132-C*** V42254-A2152-C***
V42254-A2133-C*** V42254-A2153-C***
5) Rille zur optischen Erkennung der Bolzentypen mit M3-Gewinde
6) Blechteile ortlich herunter gedrückt
7) Nur bei Ausführung mit Lötstiellänge P = 3,2mm
8) Sicke nur bei den 4 außeren Masselötstielen.

1) according to DIN 41652 p.2 and p.4
2) note: 50-contacts version: 3 contact rows
3) not for 50-contacts version
4) no tyco-marking for:
V42254-A2*17-C*** V42254-A2*18-C***
V42254-A2122-C*** V42254-A2142-C***
V42254-A2132-C*** V42254-A2152-C***
V42254-A2133-C*** V42254-A2153-C***
5) groove in the stud bolts with M3 thread (visual recognition)
6) shells pressed down locally
7) only for versions with soldering-pin length of P = 3,2mm
8) only the four corner grounding soldering-pins have a rib

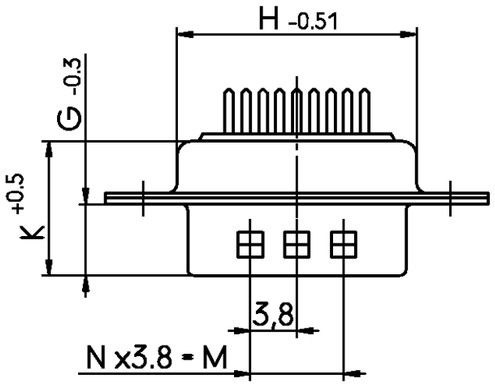

Sachnr. ordering code V42254-A2*1*-	dimension Maß / Polzahl No. of contacts	A	B	C	D	E	F	G	H	J	K	L	M	N
C*09	09	31.19	16.79	25.0 $^{+0.12}_{-0.13}$	8.23	12.93	2.74	6.12	19.53	10.97	10.46	7.72	7.6	2
C*15	15	39.52	25.12	33.3 $^{+0.15}_{-0.1}$	8.23	12.93	2.74	6.12	27.76	10.97	10.46	7.69	15.2	4
C*25	25	53.42	38.84	47.04 $^{+0.13}_{-0.13}$	8.23	12.93	2.76	5.99	41.53	10.97	10.57	7.65	26.6	7
C*37	37	69.7	55.3	63.5 $^{+0.13}_{-0.13}$	8.23	12.93	2.76	5.99	57.96	10.97	10.57	7.65	41.8	11
C*50	50 [2]	67.31	52.68	61.1 $^{+0.14}_{-0.11}$	11.07	15.75	2.76	5.99	55.58	13.82	10.57	10.45	41.8	11

Anforderungsstufe / performance level [1]

V42254-	P	Q
A211*-+***	3.2	3.2
A231*-+***	5.55	5.55
A241*-+***[3]	1.55	1.55
A251*-+***[3]	13.65	14.05

dargestellt wird die 9-polige Ausführung
drawn is the 9-contacts version

tyco Electronics
TYCO ELECTRONICS CORPORATION
OOSTKAMP - BELGIUM
Loc GW
DIMENSIONS IN MM
SCALE 2:1
WEIGHT
MATERIAL

				DATE	01.03.90
				NAME	Embo
				DEP.	PE Com PE&SE
C1	ECO-10-000445	12JAN10	AEG	TOLERANCE UNLESS SPECIFIED OTHERWISE	
C	ECR-06-029564	18 DEC 06	JvdH		
REV.	CHANGE ORDER	DATE	APP.		

PART NAME
Sub-D Lötstiften gerade
Stiftleiste mit Schirmfiederung
D-Sub straight soldering pins
male connector with grounding fingers

PART NO. V42254-A2***-C***-*-27
SHT. 1+
Customer Drawing Nr. C 7-1393483-3
OF 8

PROPRIETARY:
THIS INFORMATION IS CONFIDENTIAL AND PROPRIETARY TO TYCO ELECTRONICS CORPORATION AND ITS WORLDWIDE SUBSIDIARIES AND AFFILIATES. IT MAY NOT BE DISCLOSED TO ANYONE, OTHER THAN TYCO ELECTRONICS PERSONNEL, WITHOUT WRITTEN AUTHORIZATION FROM TYCO ELECTRONICS CORPORATION, HARRISBURG PENNSYLVANIA USA

mit Gewindebolzen:
with screwlock stud bolts:

M3:
V42254-A2119-C***
V42254-A2319-C***
V42254-A2419-C*** 3)
V42254-A2519-C*** 3)

4-40 UNC:
V42254-A2116-C***
V42254-A2316-C***
V42254-A2416-C*** 3)
V42254-A2516-C*** 3)
V42254-A2118-C***
V42254-A2318-C***
V42254-A2418-C*** 3)
V42254-A2518-C*** 3)

Verdrehsicherheit ≥ 70 Ncm
torque retention ≥ 70 Ncm

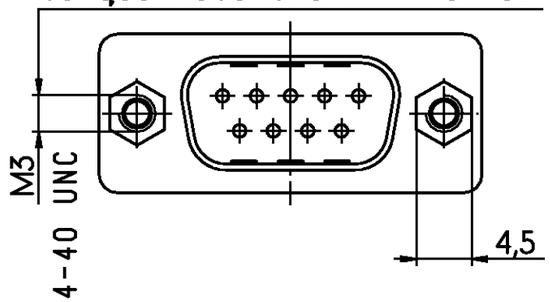

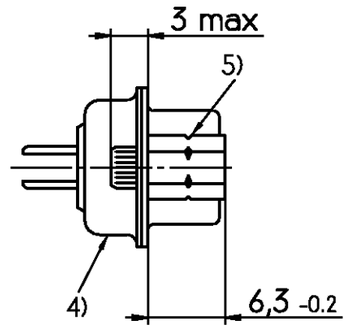

mit Stop-Mutter/Gewindeeinsatz:
with thread:

M3:
V42254-A2114-C***
V42254-A2314-C***
V42254-A2414-C*** 3)
V42254-A2514-C*** 3)

4-40 UNC:
V42254-A2112-C***
V42254-A2312-C***
V42254-A2412-C*** 3)
V42254-A2512-C*** 3)

Verdrehsicherheit ≥ 80 Ncm
torque retention ≥ 80 Ncm

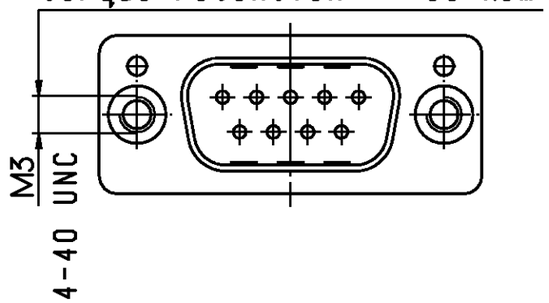

mit Stop-Mutter (für 9-, 15-, 25- u. 37-pol Ausführung):
with self locking press-in nuts (for 9-, 15- 25- and 37-contacts versions):

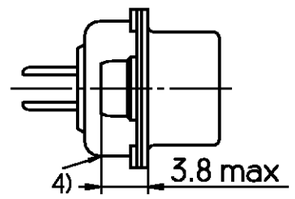

mit Gewindeeinsatz (für 50-pol Ausführung) :
with thread insert (for 50-contacts version):

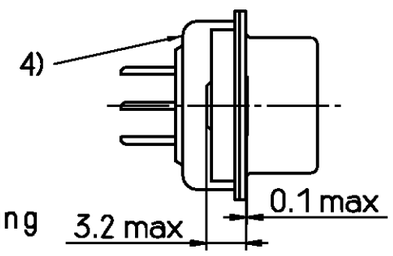

Leiterplattenbohrung
PCB layout

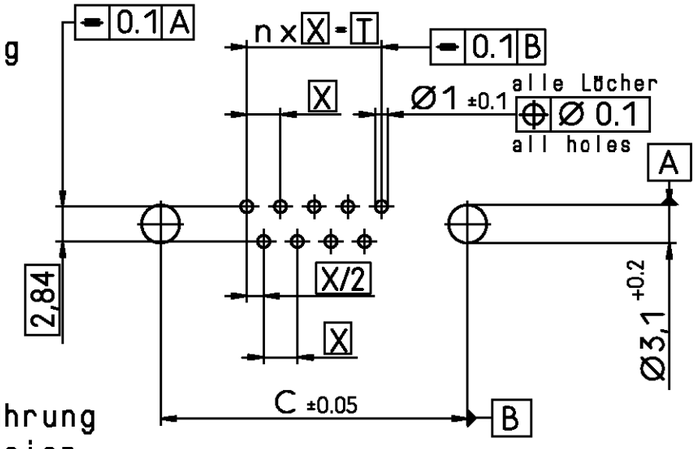

für 50-polige Ausführung
for 50-contacts version

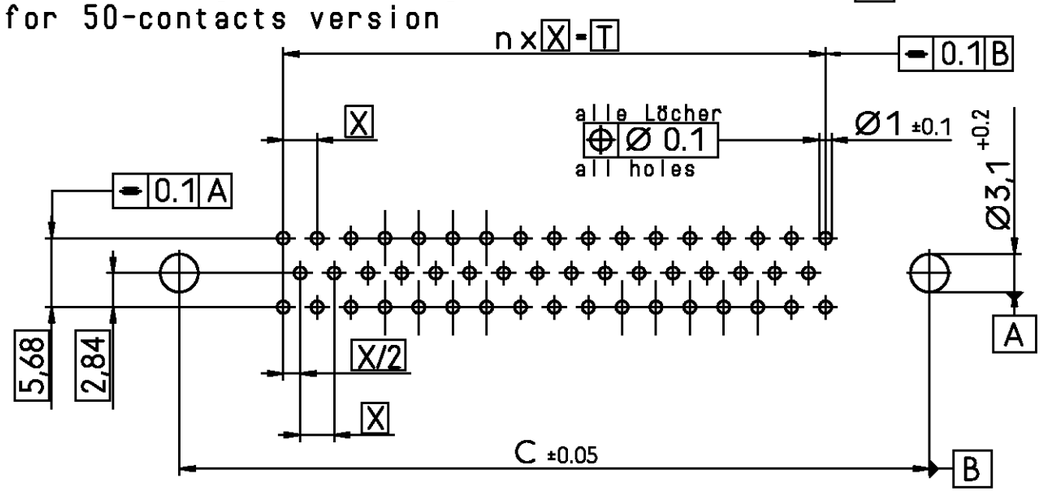

Polzahl No. of contacts	n	Abmessungen in mm dimensions in mm C	T	X
9	4	25.0	10.96	2.74
15	7	33.3	19.18	2.74
25	12	47.04	33.12	2.76
37	18	63.5	49.68	2.76
50	16	61.1	44.16	2.76

Erläuterungen: Seite 1
dargestellt wird die 9-polige Ausführung
remarks: see page 1
drawn is the 9-contacts version

tyco Electronics
TYCO ELECTRONICS CORPORATION
OOSTKAMP - BELGIUM
LOC GW
DIMENSIONS IN MM

SCALE 2:1
WEIGHT
MATERIAL

DATE 01.03.90
NAME Embo
DEP. PE Com PE&SE

PART NAME
Sub-D Lötstiften gerade
Stiftleiste mit Schirmfiederung
D-Sub straight soldering pins
male connector with grounding fingers

TOLERANCE UNLESS SPECIFIED OTHERWISE

PART NO. V42254-A2***-C***-*-27
SHT. 2+

SEE SHEET 1

REV.	CHANGE ORDER	DATE	APP.

Customer Drawing Nr. C 7-1393483-3
OF 8

PROPRIETARY:
THIS INFORMATION IS CONFIDENTIAL AND PROPRIETARY TO TYCO ELECTRONICS CORPORATION AND ITS WORLDWIDE SUBSIDIARIES AND AFFILIATES. IT MAY NOT BE DISCLOSED TO ANYONE, OTHER THAN TYCO ELECTRONICS PERSONNEL, WITHOUT WRITTEN AUTHORIZATION FROM TYCO ELECTRONICS CORPORATION, HARRISBURG PENNSYLVANIA USA

mit Masselötstiften:
with grounding soldering pins: 3)

V42254-A2215-C***
V42254-A2217-C***
V42254-A2815-C***
V42254-A2817-C***

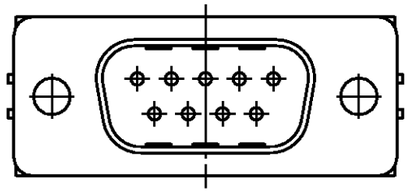

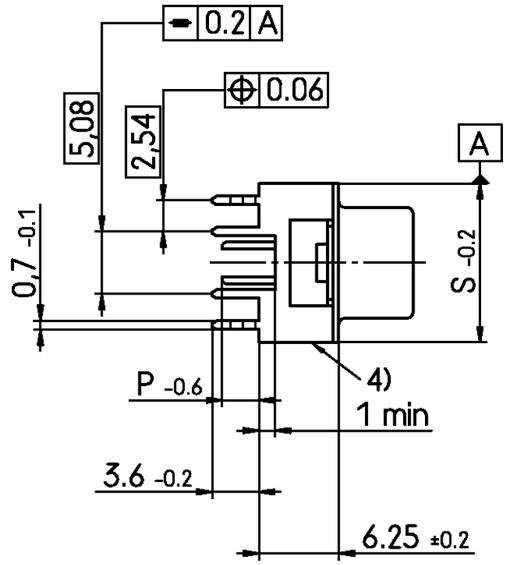

V42254-	P
A221*-+***	3.2
A281*-+***	5.55

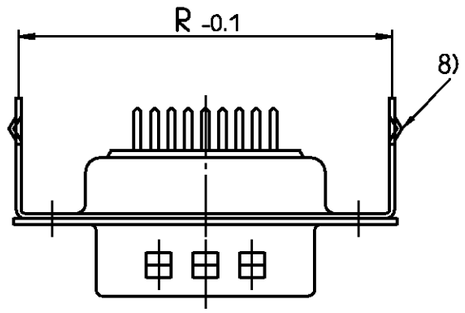

Sachnr. ordering code V42254-A2*1*-	dimension Maß / Polzahl No. of contacts	R	S
C*09	09	30.4	12.4
C*15	15	38.8	12.4
C*25	25	52.7	12.4
C*37	37	69.1	12.4

Anforderungsstufe / performance level 1)

Erläuterungen: Seite 1
dargestellt wird die 9-polige Ausführung
remarks: see page 1
drawn is the 9-contacts version

tyco Electronics
TYCO ELECTRONICS CORPORATION
OOSTKAMP - BELGIUM
LOC GW
DIMENSIONS IN MM
SCALE 2:1
WEIGHT
MATERIAL

DATE	01.03.90
NAME	Embo
DEP.	PE Com PE&SE

TOLERANCE UNLESS SPECIFIED OTHERWISE

PART NAME
Sub-D Lötstiften gerade
Stiftleiste mit Schirmfiederung
D-Sub straight soldering pins
male connector with grounding fingers

PART NO. V42254-A2***-C***-*-27
SHT. 3 + OF 8

SEE SHEET 1

REV.	CHANGE ORDER	DATE	APP.

Customer Drawing Nr. C 7-1393483-3

PROPRIETARY:
THIS INFORMATION IS CONFIDENTIAL AND PROPRIETARY TO TYCO ELECTRONICS CORPORATION AND ITS WORLDWIDE SUBSIDIARIES AND AFFILIATES. IT MAY NOT BE DISCLOSED TO ANYONE, OTHER THAN TYCO ELECTRONICS PERSONNEL, WITHOUT WRITTEN AUTHORIZATION FROM TYCO ELECTRONICS CORPORATION, HARRISBURG PENNSYLVANIA USA

mit Masselötstiften und Gewindebolzen:
with grounding soldering-pins and screwlock stud bolts: 3)

M3:	4-40 UNC:
V42254-A2219-C***	V42254-A2216-C***
	V42254-A2218-C***
V42254-A2819-C***	V42254-A2816-C***
	V42254-A2818-C***

Verdrehsicherheit ≥ 70 Ncm
torque retention ≥ 70 Ncm

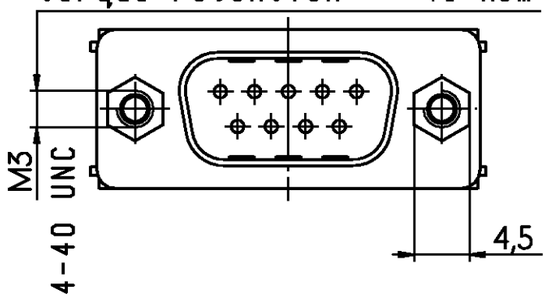

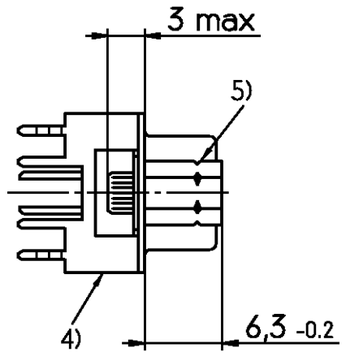

mit Masselötstiften und Stop-Mutter:
with grounding soldering-pins and thread: 3)

M3:	4-40 UNC:
V42254-A2214-C***	V42254-A2212-C***
V42254-A2814-C***	V42254-A2812-C***

Verdrehsicherheit ≥ 80 Ncm
torque retention ≥ 80 Ncm

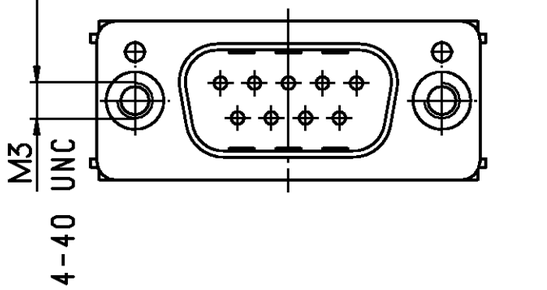

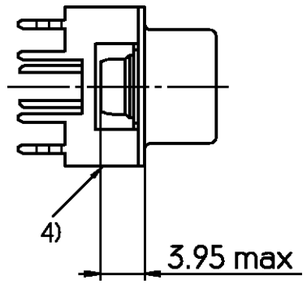

Leiterplattenbohrung
PCB layout

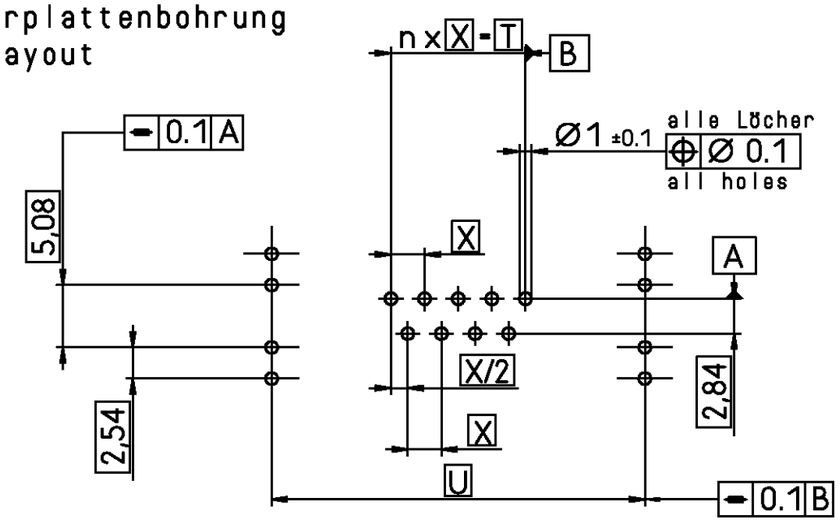

Polzahl No. of contacts	n	Abmessungen in mm dimensions in mm T	U	X
9	4	10.96	30.4	2.74
15	7	19.18	38.8	2.74
25	12	33.12	52.7	2.76
37	18	49.68	69.1	2.76

Erläuterungen: Seite 1
dargestellt wird die 9-polige Ausführung
remarks: see page 1
drawn is the 9-contacts version

tyco Electronics
TYCO ELECTRONICS CORPORATION
OOSTKAMP - BELGIUM
LOC GW
DIMENSIONS IN MM
SCALE 2:1
WEIGHT
MATERIAL

DATE	01.03.90	PART NAME	Sub-D Lötstiften gerade Stiftleiste mit Schirmfiederung D-Sub straight soldering pins male connector with grounding fingers
NAME	Embo		
DEP.	PE Com PE&SE		
TOLERANCE UNLESS SPECIFIED OTHERWISE		PART NO.	V42254-A2***-C***-*-27
		SHT.	4+
		OF	8

REV.	CHANGE ORDER	DATE	APP.
	SEE SHEET 1		

Customer Drawing Nr. C 7-1393483-3

PROPRIETARY:
THIS INFORMATION IS CONFIDENTIAL AND PROPRIETARY TO TYCO ELECTRONICS CORPORATION AND ITS WORLDWIDE SUBSIDIARIES AND AFFILIATES. IT MAY NOT BE DISCLOSED TO ANYONE, OTHER THAN TYCO ELECTRONICS PERSONNEL, WITHOUT WRITTEN AUTHORIZATION FROM TYCO ELECTRONICS CORPORATION, HARRISBURG PENNSYLVANIA USA

mit Distanzbolzen :
with distance bolts: 7)

V42254-A2120-C***
V42254-A2122-C***

Verdrehsicherheit ≥ 20 Ncm
torque retention ≥ 20 Ncm

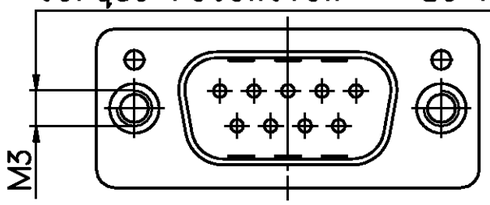

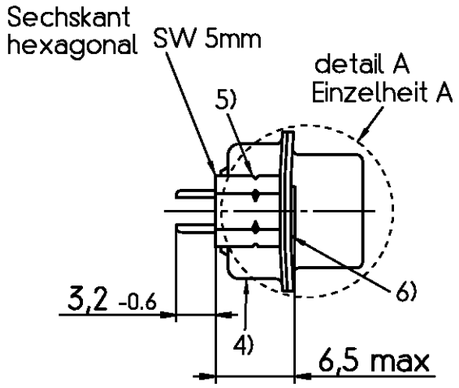

Montageart
mounting type

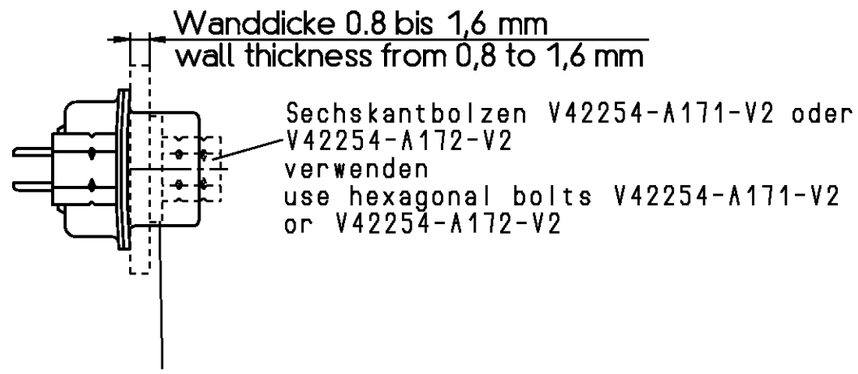

mit Gewinde- und Distanzbolzen
with screwlock stud bolts and distance bolts: 7)

	Gewindebolzen screwlock stud bolts	Distanzbolzen distance bolts
V42254-A2130-C***	M3	M3
V42254-A2131-C***	4-40 UNC	M3
V42254-A2132-C***	M3	M3
V42254-A2133-C***	4-40 UNC	M3

Verdrehsicherheit ≥ 80 Ncm
torque retention ≥ 80 Ncm

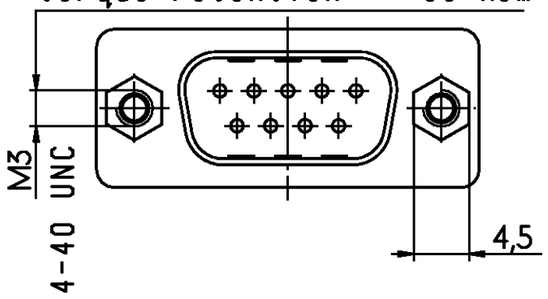

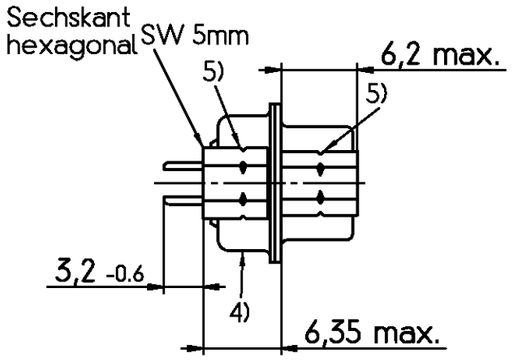

Einzelheit A (5:1)
detail A

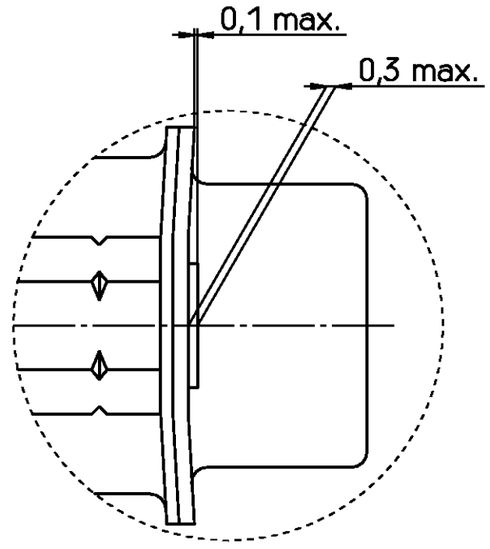

Erläuterungen: Seite 1
dargestellt wird die 9-polige Ausführung
remarks: see page 1
drawn is the 9-contacts version

tyco Electronics	TYCO ELECTRONICS CORPORATION OOSTKAMP - BELGIUM	LOC GW	DIMENSIONS IN MM	SCALE 2:1	WEIGHT
				MATERIAL	
		DATE	01.03.90	PART NAME	Sub-D Lötstiften gerade Stiftleiste mit Schirmfiederung D-Sub straight soldering pins male connector with grounding fingers
		NAME	Embo		
		DEP.	PE Com PE&SE		
		TOLERANCE UNLESS SPECIFIED OTHERWISE		PART NO.	SHT. 5+
	SEE SHEET 1			V42254-A2***-C***-*-27	
REV.	CHANGE ORDER	DATE	APP.	Customer Drawing Nr. C 7-1393483-3	OF 8

PROPRIETARY:
THIS INFORMATION IS CONFIDENTIAL AND PROPRIETARY TO TYCO ELECTRONICS CORPORATION AND ITS WORLDWIDE SUBSIDIARIES AND AFFILIATES. IT MAY NOT BE DISCLOSED TO ANYONE, OTHER THAN TYCO ELECTRONICS PERSONNEL, WITHOUT WRITTEN AUTHORIZATION FROM TYCO ELECTRONICS CORPORATION, HARRISBURG PENNSYLVANIA USA

mit Distanzbolzen und Clip :
with distance bolts and grounding socket: 7)

M3 : V42254-A2140-C*** 4-40 UNC : V42254-A2141-C***
V42254-A2142-C***

Verdrehsicherheit ≥ 20 Ncm
torque retention ≥ 20 Ncm

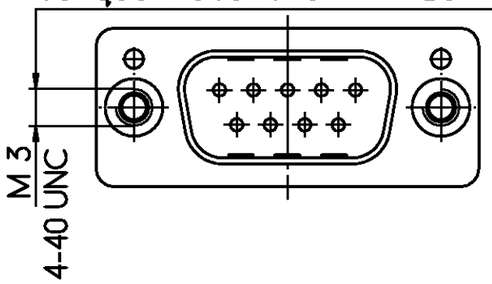

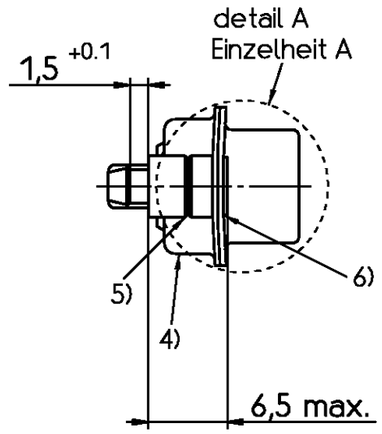

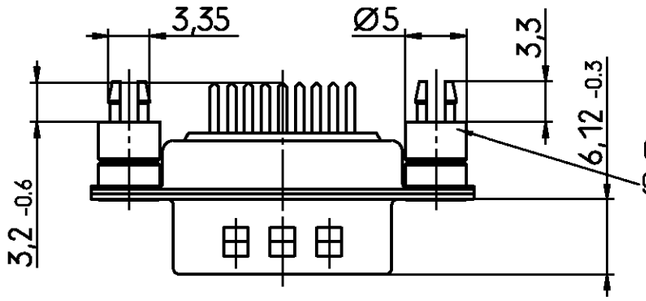

Clip für :
grounding socket for:
- Loch:
hole: Ø 3,2 +0.1
- LP-Dicke:
PCB thickness: 1,5 ±0.1

mit Gewinde- und Distanzbolzen mit Clip :
with screwlock stud bolts and distance bolts and grounding socket: 7)

M3 : V42254-A2150-C*** 4-40 UNC : V42254-A2151-C***
V42254-A2152-C*** V42254-A2153-C***

Verdrehsicherheit ≥ 80 Ncm
torque retention ≥ 80 Ncm

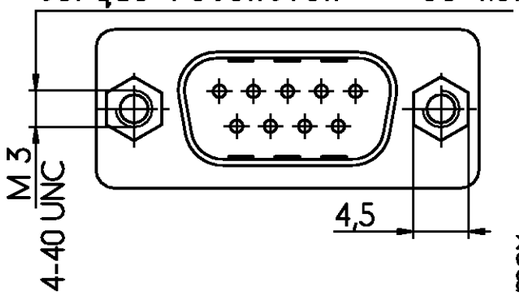

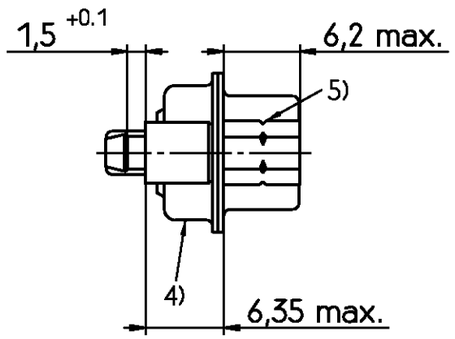

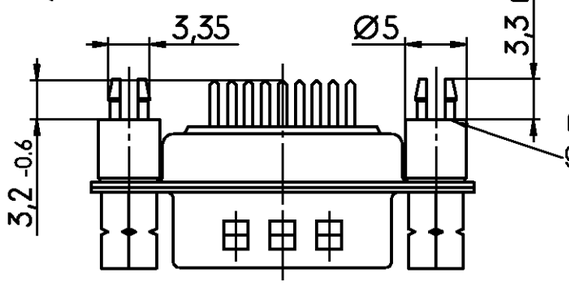

Clip für :
grounding socket for:
- Loch:
hole: Ø 3,2 +0.1
- LP-Dicke:
PCB thickness: 1,5 ±0.1

Montageart
mounting type

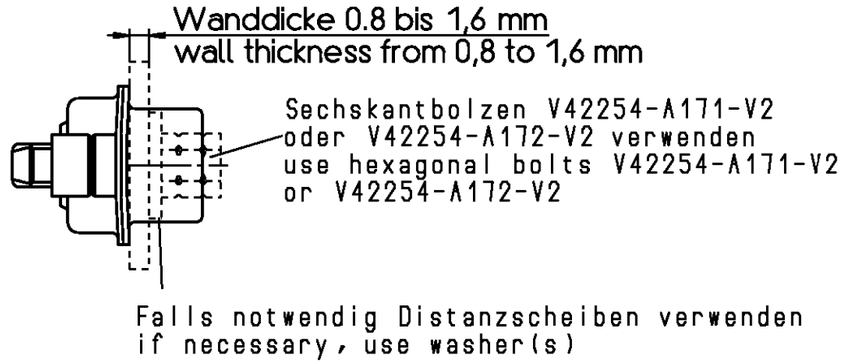

Einzelheit A (5:1)
detail A

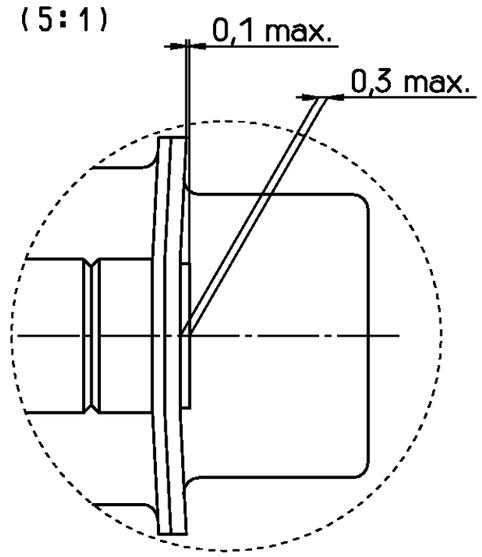

Erläuterungen: Seite 1
dargestellt wird die 9-polige Ausführung
remarks: see page 1
drawn is the 9-contacts version

tyco Electronics	TYCO ELECTRONICS CORPORATION OOSTKAMP - BELGIUM	SCALE 2:1	WEIGHT
		MATERIAL	
DATE 01.03.90		PART NAME	Sub-D Lötstiften gerade Stiftleiste mit Schirmfiederung D-Sub straight soldering pins male connector with grounding fingers
NAME Embo			
DEP. PE Com PE&SE			
TOLERANCE UNLESS SPECIFIED OTHERWISE		PART NO.	SHT. 6+
SEE SHEET 1		V42254-A2***-C***-*-27	
REV. CHANGE ORDER	DATE APP.	Customer Drawing Nr. C 7-1393483-3	OF 8

PROPRIETARY:
THIS INFORMATION IS CONFIDENTIAL AND PROPRIETARY TO TYCO ELECTRONICS CORPORATION AND ITS WORLDWIDE SUBSIDIARIES AND AFFILIATES. IT MAY NOT BE DISCLOSED TO ANYONE, OTHER THAN TYCO ELECTRONICS PERSONNEL, WITHOUT WRITTEN AUTHORIZATION FROM TYCO ELECTRONICS CORPORATION, HARRISBURG PENNSYLVANIA USA

V 4 2 2 5 4 - A 2 * * * - C * * *

	Anschlußausführung // connection type
1	Lötstiftlänge 3.2mm // soldering pin length 3.2mm
2	Lötstiftlänge 3.2mm mit Wasselötstiften 1) // soldering pin length 3.2mm with grounding soldering pins
3	Lötstiftlänge 5.55mm // soldering pin length 5.55mm
4	Lötstiftlänge 1.55mm 1) // soldering pin length 1.55mm 1)
5	Lötstiftlänge 14.05mm 1) // soldering pin length 14.05mm 1)
8	Lötstiftlänge 5.55mm mit Wasselötstiften 1) // soldering pin length 5.55mm with grounding soldering pins 1)

	Steckerart // connector type
C	Stiftleiste mit Schirmfiederung // male connector with grounding fingers

	Kontaktoberfläche / Kontaktart // contact surface / contact type
1	Anforderungsstufe 1 / gerollte Kontakte // performance level I / rolled contacts
2	Anforderungsstufe 2 / gerollte Kontakte // performance level II / rolled contacts

	Polzahl // no. of contacts
09	9-polig // 9-contacts
15	15-polig // 15-contacts
25	25-polig // 25-contacts
37	37-polig // 37-contacts
50	50-polig // 50-contacts

Steckverbinderunterscheidung // connector hardware

1* — Standardausführung + Ausführung mit Gewindeeinsatz oder Gewindebolzen
standard version + version with thread insert or screwlock stud bolts

	mit tyco-Beschriftung auf Blechteil / with tyco marking on the shell	mit Stop-mutter / with thread insert	mit Gewinde-bolzen / with screwlock stud bolts
12	ja // yes	4-40UNC	nein // no
14	ja // yes	M3	nein // no
15	ja // yes	nein // no	nein // no
16	ja // yes	nein // no	4-40UNC
17	nein // no	nein // no	nein // no
18	nein // no	nein // no	4-40UNC
19	ja // yes	nein // no	M3

2* 2) — Ausführung mit Distanzbolzen
version with distance bolts

	Distanzbolzen / distance bolts	mit tyco-Beschriftung auf Blechteil / with tyco marking on the shell
20	M3	ja // yes
22	M3	nein // no

3* 2) — Ausführung mit Gewindebolzen und Distanzbolzen
version with screwlock stud bolts and distance bolts

	mit Gewinde-bolzen / with screwlock stud bolts	mit Distanz-bolzen / with distance bolts	mit tyco-Beschriftung auf Blechteil / with tyco marking on the shell
30	M3	M3	ja // yes
31	4-40UNC	M3	ja // yes
32	M3	M3	nein // no
33	4-40UNC	M3	nein // no

4* 2) — Ausführung mit Distanzbolzen mit Clip
version with distance bolts and grounding socket

	mit Distanz-bolzen / with distance bolts	mit tyco-Beschriftung auf Blechteil / with tyco marking on the shell
40	M3 + Clip grounding socket	ja // yes
41	4-40UNC + Clip grounding socket	ja // yes
42	M3 + Clip grounding socket	nein // no

5* 2) — Ausführung mit Gewindebolzen und Distanzbolzen mit Clip
version with screwlock stud bolts and distance bolts and grounding socket

	mit Gewinde-bolzen / with screwlock stud bolts	mit Distanz-bolzen / with distance bolts	mit tyco-Beschriftung auf Blechteil / with tyco-marking on the shell
50	M3	Clip grounding socket	ja // yes
51	4-40UNC	Clip grounding socket	ja // yes
52	M3	Clip grounding socket	nein // no
53	4-40UNC	Clip grounding socket	nein // no

1) nicht für 50-polig
2) nur für Lötstiftlänge 3.2mm
1) not for 50-contacts version
2) not for soldering pin length 3.2mm

THIS INFORMATION IS CONFIDENTIAL AND PROPRIETARY TO TYCO ELECTRONICS CORPORATION AND ITS WORLDWIDE SUBSIDIARIES AND AFFILIATES. IT MAY NOT BE DISCLOSED TO ANYONE, OTHER THAN TYCO ELECTRONICS PERSONEL, WITHOUT WRITTEN AUTHORIZATION FROM TYCO ELECTRONICS CORPORATION, HARRISBURG PENNSYLVANIA USA.

tyco Electronics
TYCO ELECTRONICS CORPORATION
OOSTKAMP - BELGIUM
LOC GW
DIMENSIONS IN MM

DATE	01.03.90
NAME	Embo
APP.	PE Com PE&SE

TOLERANCE UNLESS SPECIFIED OTHERWISE

SCALE | WEIGHT
MATERIAL

PART NAME
Sub-D Lötstiften gerade
Stiftleiste mit Schirmfiederung
D-Sub straigth soldering pins
male connector with grounding fingers

PART NO. V42254-A2***-C***-*-27
SHT. 7+ OF 8

SEE SHEET 1

REV.	CHANGE ORDER	DATE	APP.

Customer Drawing Nr. C 7-1393483-3

	TYCO PARTNUMBER	OLD PART NUMBER
	~~2-1393502-4~~	SUPERSEDED BY 1392009-8
1 OBSOLETE	~~7-1393483-7~~	V42254-A2114-C215
	~~7-1393483-8~~	V42254-A2114-C225
	9-1393483-3	V42254-A2115-C209
	9-1393483-4	V42254-A2115-C215
	9-1393483-5	V42254-A2115-C225
	9-1393483-6	V42254-A2115-C237
	1-1393740-5	V42254-A2115-C250
	1-1393484-9	V42254-A2141-C209
1 OBSOLETE	~~2-1393484-0~~	V42254-A2141-C237
	~~2-1393484-5~~	V42254-A2151-C209
	2-1393740-4	V42254-A2212-C209
	2-1393740-5	V42254-A2212-C215
	2-1393740-6	V42254-A2212-C225
	3-1393740-3	V42254-A2214-C209
	3-1393740-4	V42254-A2214-C215
1 OBSOLETE	~~3-1393740-5~~	V42254-A2214-C225
	3-1393740-6	V42254-A2214-C237
	5-1393740-2	V42254-A2215-C209
1 OBSOLETE	~~5-1393740-3~~	V42254-A2215-C215
	5-1393740-4	V42254-A2215-C225
1 OBSOLETE	~~5-1393740-5~~	V42254-A2215-C237
	~~5-1419149-2~~	V42254-A2216-C109
	~~5-1419149-3~~	V42254-A2216-C115
	~~5-1419149-4~~	V42254-A2216-C125
	~~5-1419149-5~~	V42254-A2216-C137
	7-1393740-8	V42254-A2216-C209
	7-1393740-9	V42254-A2216-C215
	8-1393740-0	V42254-A2216-C225
	8-1393740-1	V42254-A2216-C237
1 OBSOLETE	~~9-1393740-4~~	V42254-A2219-C209
	~~9-1393740-6~~	V42254-A2219-C225
	~~9-1393740-7~~	V42254-A2219-C237
	3-1393484-7	V42254-A2315-C209
	3-1393484-8	V42254-A2315-C215
	3-1393484-9	V42254-A2315-C225
1 OBSOLETE	~~4-1393484-0~~	V42254-A2315-C237
	~~9-1393740-9~~	V42254-A2315-C250
	1393741-2	V42254-A2814-C225
	2-1392010-9	V42254-A2815-C237
1 OBSOLETE	~~1393741-7~~	V42254-A2819-C225
	1857903-3	V42254-A2153-C225
	1857903-5	V42254-A2153-C250

1 OBSOLETE PARTS: OBSOLETE CIS STREAMLINING PER D.RENAUD/D.SINISI

PROPRIETARY:
THIS INFORMATION IS CONFIDENTIAL AND PROPRIETARY TO TYCO ELECTRONICS CORPORATION AND ITS WORLDWIDE SUBSIDIARIES AND AFFILIATES. IT MAY NOT BE DISCLOSED TO ANYONE, OTHER THAN TYCO ELECTRONICS PERSONNEL, WITHOUT WRITTEN AUTHORIZATION FROM TYCO ELECTRONICS CORPORATION, HARRISBURG PENNSYLVANIA USA

tyco Electronics

TYCO ELECTRONICS CORPORATION
OOSTKAMP - BELGIUM

LOC GW

DIMENSIONS IN MM

SCALE 2:1

WEIGHT

MATERIAL

DATE	01.03.90
NAME	Embo
DEP.	PE Com PE&SE

PART NAME: Sub-D Lötstiften gerade
Stiftleiste mit Schirmfiederung
D-Sub straight soldering pins
male connector with grounding fingers

TOLERANCE UNLESS SPECIFIED OTHERWISE

PART NO. V42254-A2***-C***-*-27

SHT. 8+

SEE SHEET 1

REV.	CHANGE ORDER	DATE	APP.

Customer Drawing Nr. C 7-1393483-3

OF 8