THIS DRAWING IS UNPUBLISHED. RELEASED FOR PUBLICATION -.- .
© COPYRIGHT - BY TYCO ELECTRONICS CORPORATION. ALL RIGHTS RESERVED.

LOC	DIST
DF	DO

REVISIONS

P	LTR	DESCRIPTION	DATE	DWN	APVD
	AC	REV PER ECO-06-024728	11-3-06	CT	ND

1. THIS PLUG WILL MATE WITH ANY RECEPTACLE CONNECTOR WITH THE SAME INSERT ARRANGEMENT AS DEFINED BY MS18273-2.
2. MAXIMUM WIRE INSULATION USED WITH THIS RCPT. IS .054 DIA.
3. Be-Cu RETENTION CLIPS ARE INCLUDED IN INSERTS.
4. AMP PART NO. ONLY, STAMPED AS SHOWN.
5. THESE CONNECTORS ARE QUALIFIED TO GODDARD SPACE FLIGHT CENTER SPECIFICATION S-311-P-4.
6. UL/CSA DESIGNATION STAMPED IN THIS AREA, OPTIONAL.
7. CUSTOMER PART NUMBER MAY BE SPLIT BETWEEN FRONT AND REAR SHELLS, SAME SIDE.
8. 25 CONTACTS, AMP PART NUMBER 204370-8, SUPPLIED WITH EACH CONNECTOR.
9. CONNECTOR LOADED WITH POSTED CONTACTS. INSPECTION REQUIREMENTS PER GENERAL ELECTRIC DOCUMENT 20025720.
10. RESTRICTED TO CAE ELECTRONICS.
11. CONNECTOR LOADER WITH POSTED CONTACTS.

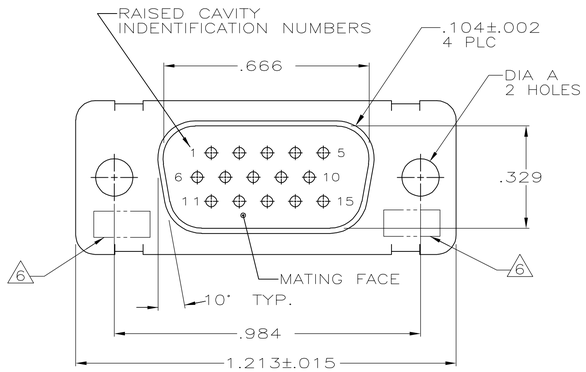

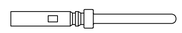

CONTACT P/N 204370-8
GSFC G-08-P1
(SUPPLIED WITH 209498-8 ONLY)

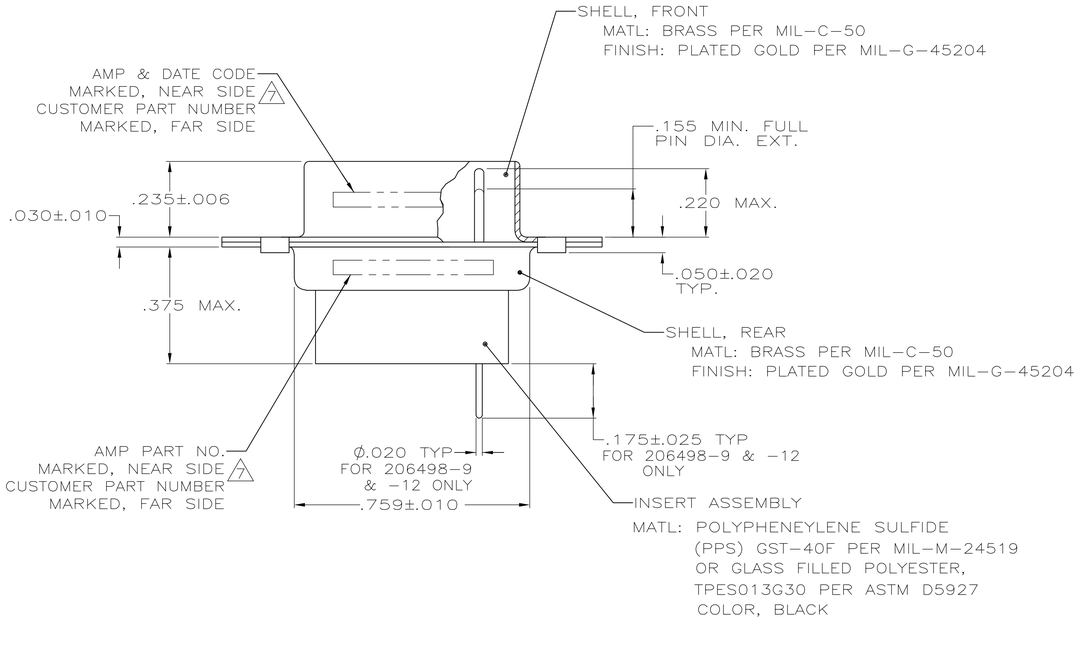

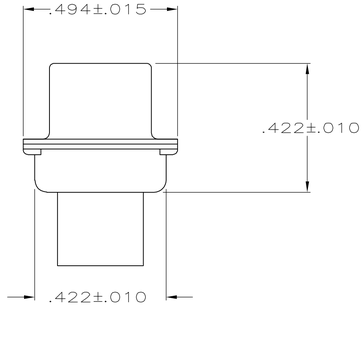

	REMARKS	DIA A	MARKED CUSTOMER P/N	MARKED AMP P/N	AMP P/N
		.120	570566-7	1-206498-3	1-206498-3
	11	.120	–	1-206498-2	1-206498-2
	5 10	.120	311P407-1P-B-12	206498-4	1-206498-1
	5 10	.154	311P407-1P-B-15	206498-1	1-206498-0
	9	.120	2002570P2015P	206498-9	206498-9
	8	.120	3261113-7	206498-8	206498-8
OBSOLETE		.154	1622251-003	206498-7	206498-7
OBSOLETE		.120	R4383P15P	206498-6	206498-6
		.120	R4383P15P-2	206498-5	206498-5
	5	.120	311P407-1P-B-12	206498-4	206498-4
		.154	4	206498-3	206498-3
		.120	R9259P15P	206498-2	206498-2
	5	.154	311P407-1P-B-15	206498-1	206498-1

THIS DRAWING IS A CONTROLLED DOCUMENT.

DIMENSIONS: INCHES

TOLERANCES UNLESS OTHERWISE SPECIFIED:
0 PLC ± –
1 PLC ± –
2 PLC ± –
3 PLC ± .005
4 PLC ± –
ANGLES ± –

MATERIAL: SEE CALLOUTS
FINISH: SEE CALLOUTS

DWN P. YEAGER 020CT2006
CHK D. MILLER 050CT06
APVD D. MILLER 060CT06
PRODUCT SPEC —
APPLICATION SPEC —
WEIGHT —

Tyco Electronics Corporation
Harrisburg, PA 17105-3608

NAME
PLUG, PIN CONTACTS
HI-DENSITY D CONNECTOR
SIZE 1, 15 POSN, NONMAGNETIC

SIZE	CAGE CODE	DRAWING NO	RESTRICTED TO
A1	00779	C-206498	—

CUSTOMER DRAWING | SCALE 4:1 | SHEET 1 OF 1 | REV AC

AMP 4805 REV 31MAR2000