THIS DRAWING IS UNPUBLISHED. RELEASED FOR PUBLICATION -,- .
© COPYRIGHT - BY TYCO ELECTRONICS CORPORATION. ALL RIGHTS RESERVED.

LOC	DIST
—	—

REVISIONS

P	LTR	DESCRIPTION	DATE	DWN	APVD
	C	REV PER ECO-06-018048	05OCT06	PY	DM

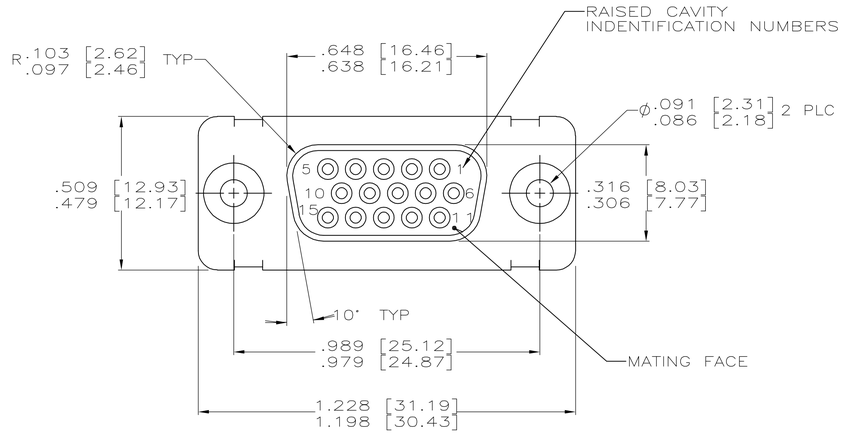

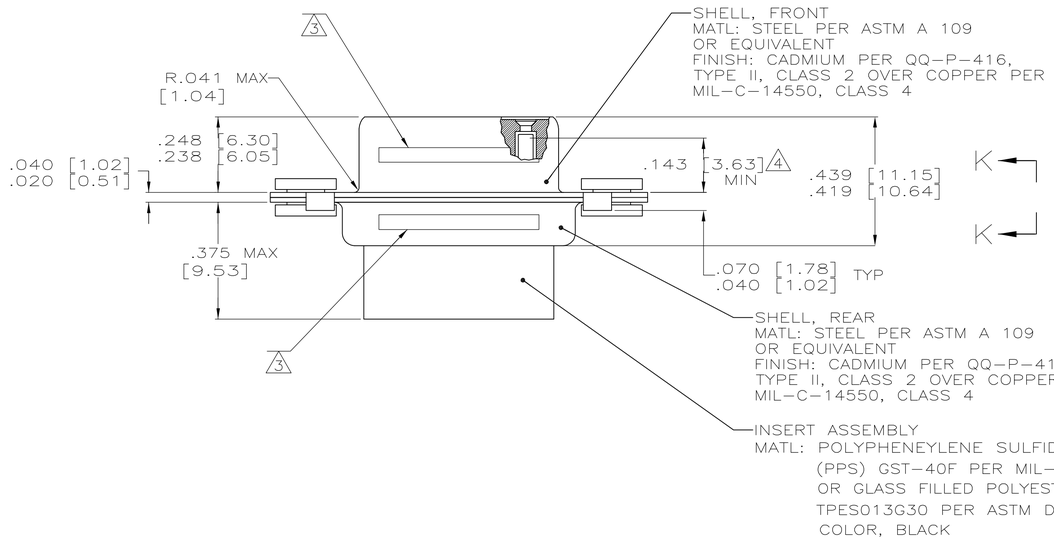

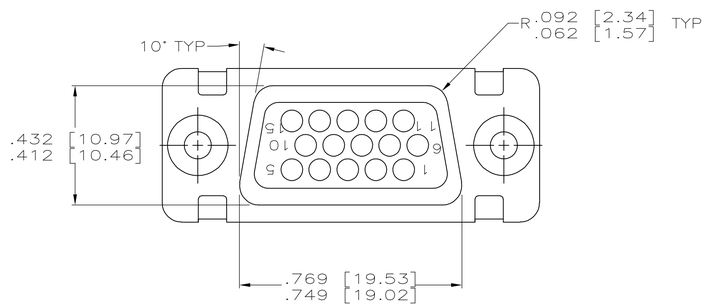

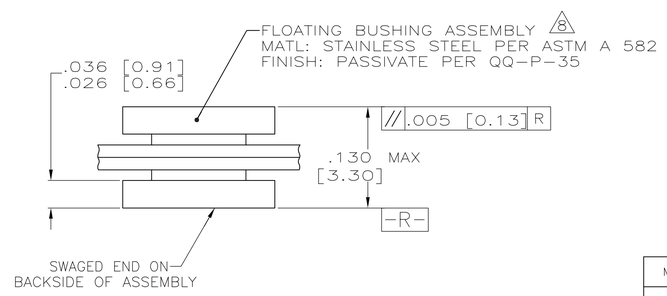

VIEW K-K
SCALE 10:1

1. THIS CONNECTOR ASSEMBLY IS SUPPLIED WITH METAL CONTACT RETENTION CLIPS INSTALLED IN THE INSERT ASSEMBLY.

2. THE CONNECTORS DESCRIBED IN THIS DOCUMENT MEET THE REQUIREMENTS OF MIL-C-24308 AND MATE WITH ANY PLUG CONNECTOR WITH THE SAME INSERT ARRANGEMENT.

3. THE PART NUMBER MARKED ON THE CONNECTOR DIFFERS FROM THE PART NUMBER ORDERED DUE TO THE MARKING REQUIREMENTS OF MIL-C-24308/2 (PART NUMBER MARKED ON CONNECTOR REPRESENTS CONNECTOR ASSEMBLY WITH CONTACTS).
MARK WITH .047 [1.19]-.062 [1.57] HIGH CHARACTERS.
FAR SIDE REFERS TO THE WIDE SIDE OF THE KEYSTONE.
NEAR SIDE REFERS TO THE NARROW SIDE OF THE KEYSTONE.
MARKING SHALL BE LOCATED AS FOLLOWS:
   A. "M24308" ON FRONT SHELL, FAR SIDE.
   B. SLASH SHEET AND DASH NUMBER ON REAR SHELL, FAR SIDE.
   C. "AMP" AND DATE CODE ON FRONT SHELL, NEAR SIDE.
   D. AMP PART NUMBER ON REAR SHELL, NEAR SIDE.
IF THE FRONT SHELL IS TOO SMALL FOR "AMP", AMP PART NUMBER AND DATE CODE, THEN SPLIT AS FOLLOWS:
   A. AMP PART NUMBER ON REAR SHELL, NEAR SIDE.
   B. "AMP" AND DATE CODE ON FRONT SHELL, NEAR SIDE.
   C. MILITARY PART NUMBER ON REAR SHELL, FAR SIDE.

4. POINT OF ELECTRICAL ENGAGEMENT - AS MEASURED WITH A .0295 [0.749] - .0305 [0.775] DIAMETER SQUARE ENDED TEST PIN. CONTACT NOT INCLUDED - SHOWN FOR DIMENSIONAL REFERENCE ONLY.

5. THIS CONNECTOR ASSEMBLY IS DESIGNED TO ACCEPT SIZE 22 CRIMP TYPE SOCKET CONTACT MILITARY PART NUMBER M39029/57-354 (AMP PART NUMBER 204351-1). FOR ALTERNATE CONTACT OPTIONS CONSULT AMP CATALOG 79-547.

6. MAXIMUM WIRE INSULATION TO BE USED WITH THIS CONNECTOR ASSEMBLY IS .054 [1.37] DIAMETER.

7. FOR CONTACT CRIMPING INSTRUCTION SHEET REFER TO AMP IS 7516. FOR CONTACT INSTALLATION AND REMOVAL INSTRUCTION SHEET REFER TO AMP IS 7508.

8. FLOAT SPECIFICATIONS ARE .004 [0.10]-.012 [0.30] VERTICALLY AND .026 [0.66]-.036 [0.91] HORIZONTALLY.

9. PART NUMBER FOR ORDERING.

10. DIMENSIONS AND TOLERANCES PER ANSI Y14.5M-1982.

11. THIS DRAWING SHALL BE INTERPRETED IN ACCORDANCE WITH APPLICABLE STANDARDS LISTED IN MIL-STD-100.

MS18273-2	15	1	M24308/2-487F	M24308/2-347F	593022-1	593026-1
INSERT ARRANGEMENT	NO OF POS	SHELL SIZE	PACKAGE 9 MILITARY P/N	MILITARY P/N 3 ON CONNECTOR	AMP P/N 3 ON CONNECTOR	PART NUMBER 9

THIS DRAWING IS A CONTROLLED DOCUMENT.

DIMENSIONS: INCHES

TOLERANCES UNLESS OTHERWISE SPECIFIED:
0 PLC ± -
1 PLC ± -
2 PLC ± -
3 PLC ± .005 [0.13]
4 PLC ± -
ANGLES ± -

MATERIAL: SEE CALLOUTS
FINISH: SEE CALLOUTS

DWN: AJ GRAFF 10-1-92
CHK: B.GILLMAN 10-13-92
APVD: F.KINSEY 10-13-92
PRODUCT SPEC: —
APPLICATION SPEC: —
WEIGHT: —

tyco Electronics — Tyco Electronics Corporation, Harrisburg, PA 17105-3608

NAME: AMPLIMITE RECEPTACLE ASSY WITHOUT SIZE 22 CRIMP TYPE SOCKET CONTACTS SERIES 90, FLOATING BUSHING, SHELL SIZE 1

SIZE	CAGE CODE	DRAWING NO	RESTRICTED TO
A1	00779	C-593026	—

CUSTOMER DRAWING | SCALE 4:1 | SHEET 1 OF 1 | REV C