DRAWING MADE IN THIRD ANGLE PROJECTION
THIS DRAWING IS UNPUBLISHED. RELEASED FOR PUBLICATION ,19 .
© COPYRIGHT 19 BY AMP INCORPORATED. ALL INTERNATIONAL RIGHTS RESERVED.

LOC	DIST	P	F	REVISIONS				
DF	D0			ZONE	LTR	DESCRIPTION	DATE	APPD
					C	REV PER 0G3D-0253-00 CT	1-01	CB

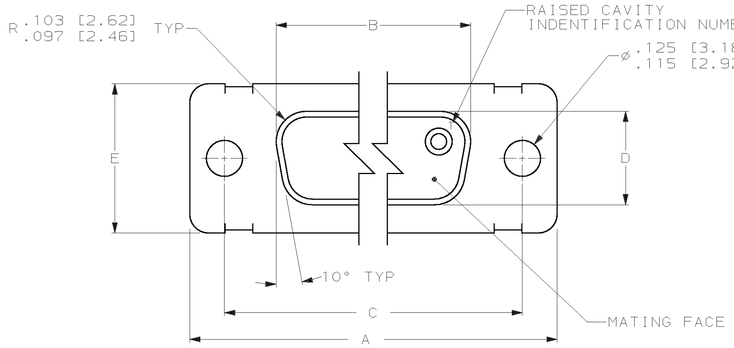

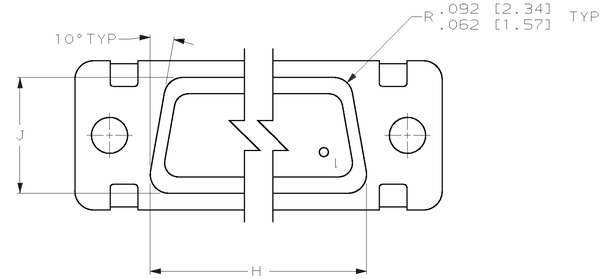

VIEW Z-Z

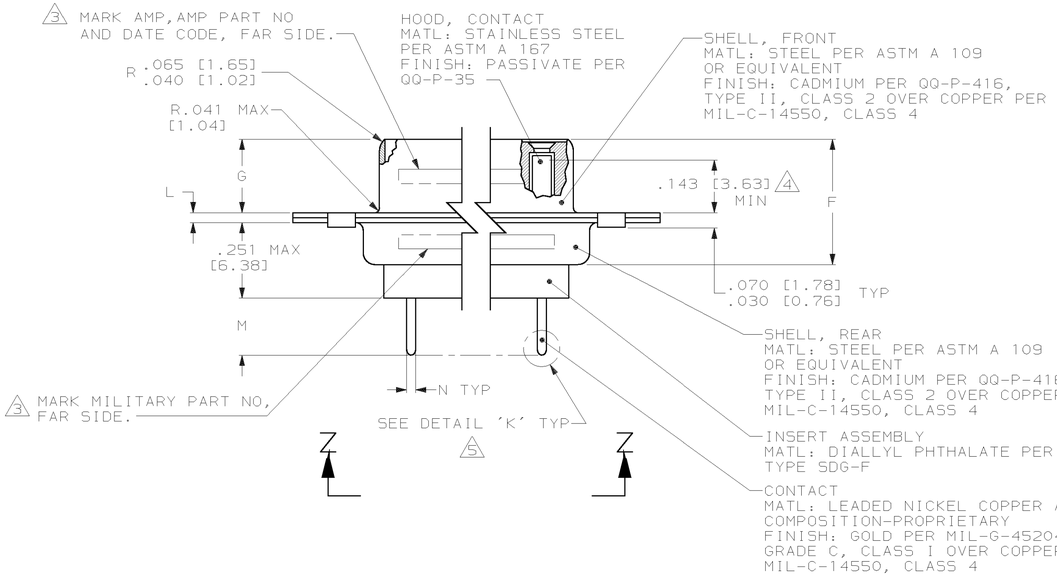

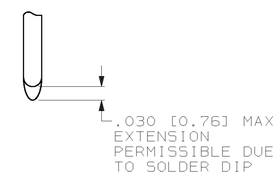

DETAIL K 5
SCALE 8:1

1. SEE SHEET 2 FOR RECOMMENDED P.C. BOARD LAYOUT. TRUE POSITION TOLERANCE FOR P.C.BOARD LAYOUT IS .010 [0.25] AT MAX MATERIAL CONDITION. SUGGESTED BOARD THICKNESS IS .125 [3.18]

2. THE CONNECTORS DESCRIBED IN THIS DOCUMENT MEET THE REQUIREMENTS OF MIL-C-24308 AND MATE WITH ANY PLUG CONNECTOR WITH SAME INSERT ARRANGEMENT.

3. MARK WITH .047 [1.19]-.062 [1.57] HIGH CHARACTERS.
FAR SIDE REFERS TO THE WIDE SIDE OF THE KEYSTONE.
NEAR SIDE REFERS TO THE NARROW SIDE OF THE KEYSTONE.
IF THE REAR SHELL IS TOO SMALL FOR THE ENTIRE MILITARY PART NUMBER, MARKING SHALL BE LOCATED AS FOLLOWS:
   A. "M24308" ON FRONT SHELL, FAR SIDE.
   B. SLASH SHEET AND DASH NUMBER ON REAR SHELL, FAR SIDE.
   C. "AMP" AND DATE CODE ON FRONT SHELL, NEAR SIDE.
   D. AMP PART NUMBER ON REAR SHELL, NEAR SIDE.
IF THE FRONT SHELL IS TOO SMALL FOR "AMP", AMP PART NUMBER AND DATE CODE, THEN SPLIT AS FOLLOWS:
   A. AMP PART NUMBER ON REAR SHELL, NEAR SIDE.
   B. "AMP" AND DATE CODE ON FRONT SHELL, NEAR SIDE.
   C. MILITARY PART NUMBER ON REAR SHELL, FAR SIDE.

4. POINT OF ELECTRICAL ENGAGEMENT - AS MEASURED WITH A .0390 [0.991]-.0393 [0.998] DIA SQUARE ENDED TEST PIN.

5. SOLDER DIP PER MIL-STD-2000 COMPOSITION Sn63 CONFORMING TO QQ-S-571. COVERAGE SHALL BE COMPLETE TO A DISTANCE .020 [0.51] MAX FROM INSERT ASSEMBLY.

6. THE SOLDER DIP PROCESS IS PERFORMED SUBSEQUENT TO THE COMPLETION OF PRODUCTION OF THE MILITARY QUALIFIED CONNECTOR. DIMENSIONS APPLY PRIOR TO SOLDER DIPPING.

7. SPACERS (QTY 2) ARE SUPPLIED WITH CONNECTORS (NOT ATTACHED TO THE CONNECTOR).

8. DIMENSIONS AND TOLERANCES PER ANSI Y14.5M-1982.

9. THIS DRAWING SHALL BE INTERPRETED IN ACCORDANCE WITH APPLICABLE STANDARDS LISTED IN MIL-STD-100.

SUPERSEDED - SEE TABLE

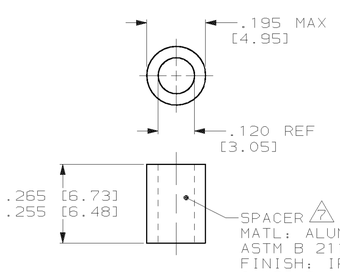

N	M	L	J	H	G	F	E	D	C	B	A	INSERT ARRANGEMENT	NO OF POS	SHELL SIZE	MILITARY P/N ON CONNECTOR 3	AMP P/N ON CONNECTOR 3	PART NUMBER
.033 .027 [0.84 0.69]	.208 .168 [5.28 4.27]	.040 .020 [1.02 0.51]	.544 .524 [13.82 13.31]	2.188 2.168 [55.58 55.07]	.248 .238 [6.30 6.05]	.439 .419 [11.15 10.64]	.620 .590 [15.75 14.99]	.428 .418 [10.87 10.62]	2.411 2.401 [61.24 60.99]	2.069 2.059 [52.55 52.30]	2.650 2.620 [67.31 66.55]	MS18277-1	50	5	M24308/23-11F	593072-5	1-593072-0 5
			.432 .412 [10.97 10.46]	2.282 2.262 [57.96 57.45]			.509 .479 [12.93 12.17]	.316 .306 [8.03 7.77]	2.505 2.495 [63.63 63.37]	2.164 2.154 [54.97 54.71]	2.744 2.714 [69.70 68.94]	MS18276-1	37	4	M24308/23-10F	593072-4	593072-9 5
				1.635 1.615 [41.53 41.02]					1.857 1.847 [47.17 46.91]	1.516 1.506 [38.51 38.25]	2.103 2.073 [53.42 52.65]	MS18275-1	25	3	M24308/23-9F	593072-3	593072-8 5
				1.093 1.073 [27.76 27.25]					1.317 1.307 [33.45 33.20]	.976 .966 [24.79 24.54]	1.556 1.526 [39.52 38.76]	MS18274-1	15	2	M24308/23-8F	593072-2	593072-7 5
				.769 .749 [19.53 19.02]					.989 .979 [25.12 24.87]	.648 .638 [16.46 16.21]	1.228 1.198 [31.19 30.43]	MS18273-1	9	1	M24308/23-7F	593072-1	593072-6 5
			.544 .524 [13.82 13.31]	2.188 2.168 [55.58 55.07]			.620 .590 [15.75 14.99]	.428 .418 [10.87 10.62]	2.411 2.401 [61.24 60.99]	2.069 2.059 [52.55 52.30]	2.650 2.620 [67.31 66.55]	MS18277-1	50	5	M24308/23-11F	593072-5	593072-5
			.432 .412 [10.97 10.46]	2.282 2.262 [57.96 57.45]			.509 .479 [12.93 12.17]	.316 .306 [8.03 7.77]	2.505 2.495 [63.63 63.37]	2.164 2.154 [54.97 54.71]	2.744 2.714 [69.70 68.94]	MS18276-1	37	4	M24308/23-10F	593072-4	593072-4
				1.635 1.615 [41.53 41.02]					1.857 1.847 [47.17 46.91]	1.516 1.506 [38.51 38.25]	2.103 2.073 [53.42 52.65]	MS18275-1	25	3	M24308/23-9F	593072-3	593072-3
				1.093 1.073 [27.76 27.25]					1.317 1.307 [33.45 33.20]	.976 .966 [24.79 24.54]	1.556 1.526 [39.52 38.76]	MS18274-1	15	2	M24308/23-8F	593072-2	593072-2
				.769 .749 [19.53 19.02]					.989 .979 [25.12 24.87]	.648 .638 [16.46 16.21]	1.228 1.198 [31.19 30.43]	MS18273-1	9	1	M24308/23-7F	593072-1	593072-1

REMARKS	PART NUMBER
SUPERSEDED BY 1-443976-0	1-593072-0
SUPERSEDED BY 443976-9	593072-9
SUPERSEDED BY 443976-8	593072-8
SUPERSEDED BY 443976-7	593072-7
SUPERSEDED BY 443976-6	593072-6

REMARKS	PART NUMBER
SUPERSEDED BY 443976-5	593072-5
SUPERSEDED BY 443976-4	593072-4
SUPERSEDED BY 443976-3	593072-3
SUPERSEDED BY 443976-2	593072-2
SUPERSEDED BY 443976-1	593072-1

DO NOT SCALE PRINT. UNLESS SPECIFIED DIMENSIONS IN INCHES [mm]
TOLERANCES ON :
2 PLC DEC ± -
3 PLC DEC ± -
ANGLES ± 1°
MATERIAL: SEE CALLOUTS
FINISH: SEE CALLOUTS

DR 9-10-92 AJ GRAFF
CHK 9-17-92 B.GILLMAN
APPD 9-17-92 F.KINSEY
APPD 9-17-92 F.KINSEY
PRODUCT SPEC: MIL-C-24308
APPLICATION SPEC: -
WEIGHT -

AMP INCORPORATED Harrisburg, Pa. 17105

NAME: AMPLIMITE RECEPTACLE ASSY WITH SIZE 20 STRAIGHT POSTED P.C. BOARD CONTACTS, SERIES 109, SHELL SIZES 1 THRU 5

SIZE D | FSCM NO 00779 | DRAWING NO 593072
SCALE 4:1 | SHEET 1 of 2

AMP 1756-3 REV 3-87
30-JAN-01 13:22:46 amp16412 /home/amp16412/edsmod

CUSTOMER DRAWING

DRAWING MADE IN THIRD ANGLE PROJECTION

THIS DRAWING IS UNPUBLISHED. RELEASED FOR PUBLICATION ,19 .

© COPYRIGHT 19 BY AMP INCORPORATED. ALL INTERNATIONAL RIGHTS RESERVED.

LOC	DIST	P	F
DF	D0		

REVISIONS

ZONE	LTR	DESCRIPTION	DATE	APPD
	B	SEE SHEET 1	–	–

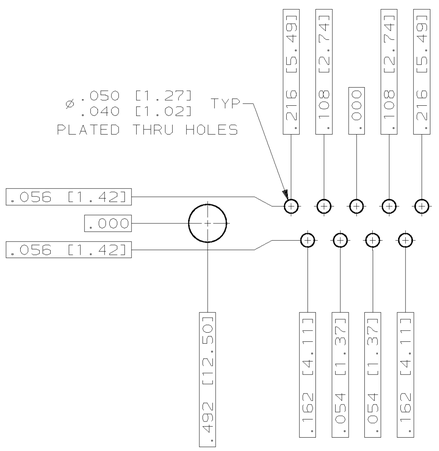

RECOMMENDED P.C. BOARD LAYOUT
SHELL SIZE 1 (9 POSITION) 1

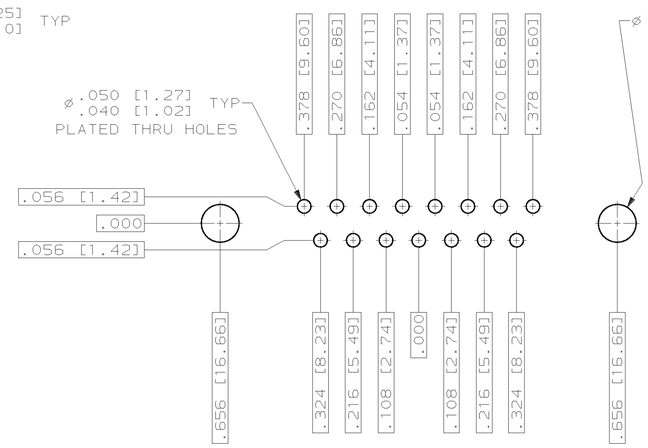

RECOMMENDED P.C. BOARD LAYOUT
SHELL SIZE 2 (15 POSITION) 1

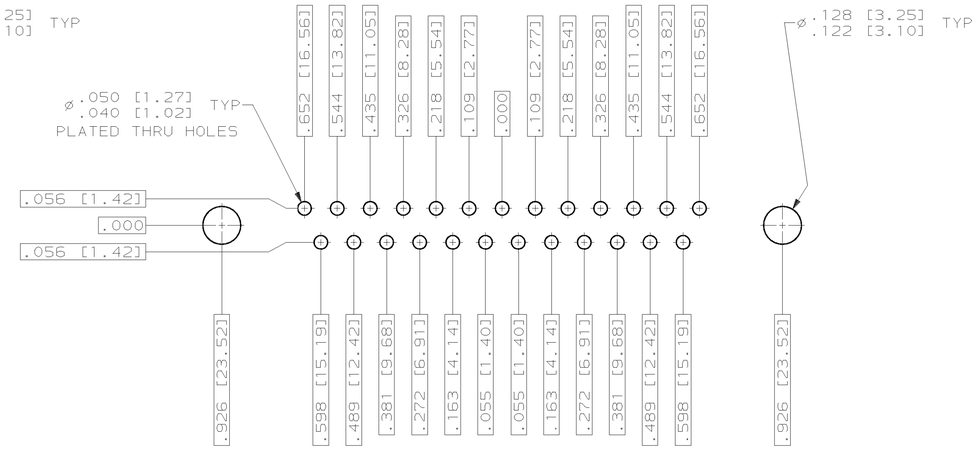

RECOMMENDED P.C. BOARD LAYOUT
SHELL SIZE 3 (25 POSITION) 1

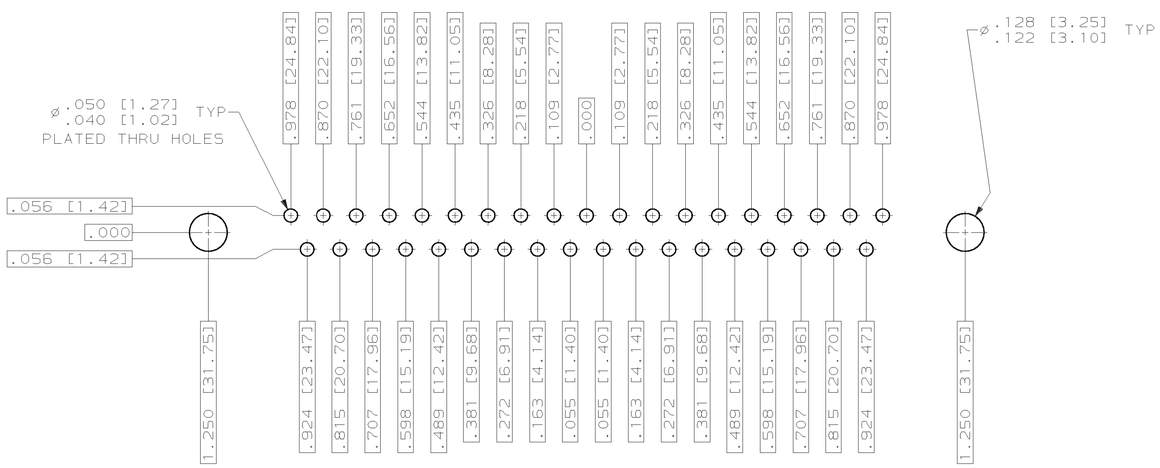

RECOMMENDED P.C. BOARD LAYOUT
SHELL SIZE 4 (37 POSITION) 1

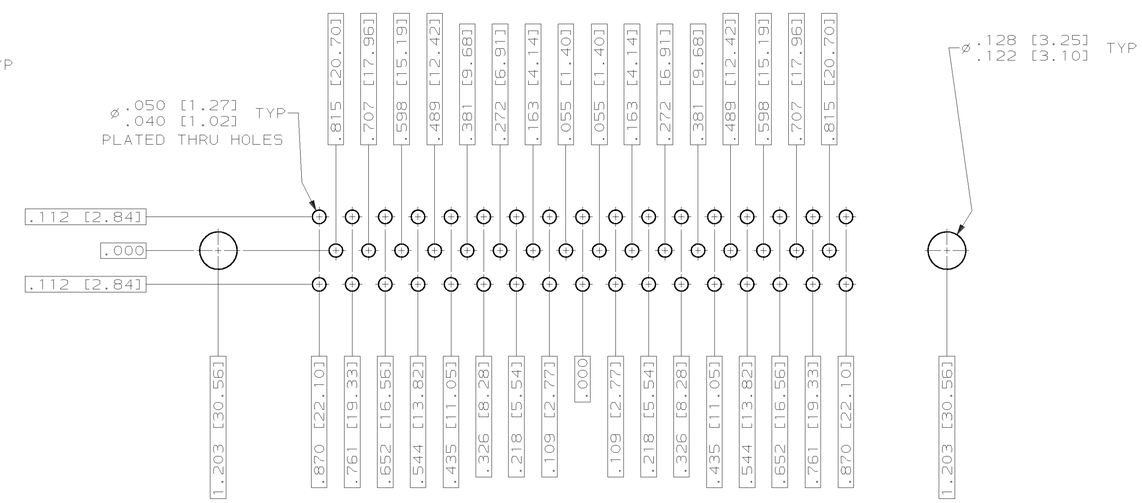

RECOMMENDED P.C. BOARD LAYOUT
SHELL SIZE 5 (50 POSITION) 1

DO NOT SCALE PRINT. UNLESS SPECIFIED DIMENSIONS IN INCHES [mm] TOLERANCES ON : 2 PLC DEC ± - 3 PLC DEC ± - ANGLES ± 1°	DR 9-10-92 AJ GRAFF CHK 9-17-92 B.GILLMAN APPD 9-17-92 F.KINSEY APPD 9-17-92 F.KINSEY	AMP INCORPORATED Harrisburg, Pa. 17105
MATERIAL SEE CALLOUTS	PRODUCT SPEC MIL-C-24308	NAME AMPLIMITE RECEPTACLE ASSY WITH SIZE 20 STRAIGHT POSTED P.C. BOARD CONTACTS, SERIES 109, SHELL SIZES 1 THRU 5
FINISH SEE CALLOUTS	APPLICATION SPEC - WEIGHT -	SIZE D · FSCM NO 00779 · DRAWING NO 593072 SCALE 4:1 · - · SHEET 2 of 2

CUSTOMER DRAWING

AMP 1756-3 REV 3-87

13-APR-00 10:46:06 amp16412 /home/amp16412/edsmod