APPLICATION SPECIFICATION

1. SCOPE

1.1. Content

This specification covers the requirements for application of PICABOND* regular and weather resistant breakaway load coil connectors. These requirements are applicable to hand actuated or automated tools. For specific connector part numbers and wire sizes relative to the products covered by this specification, see Figure 6.

1.2. Design

These connectors consist of 2 separate open-barrel metal channels laminated to the same insulator, each with 2 sets of double slotted lances protruding from the base of the channel. Perforations in the insulating film midway between the connector halves enable physical separation of the 2 halves during crimping. Sidewalls of the connector halves are composed of a plurality of shaped elements (legs and stuffers). Elements serve to hold and stuff the wires positioned between the sidewalls into the slots formed by the lances, during the crimping cycle.

1.3. Reference Specification

For application performance requirements see AMP Specification 108-6015.

2. NOMENCLATURE

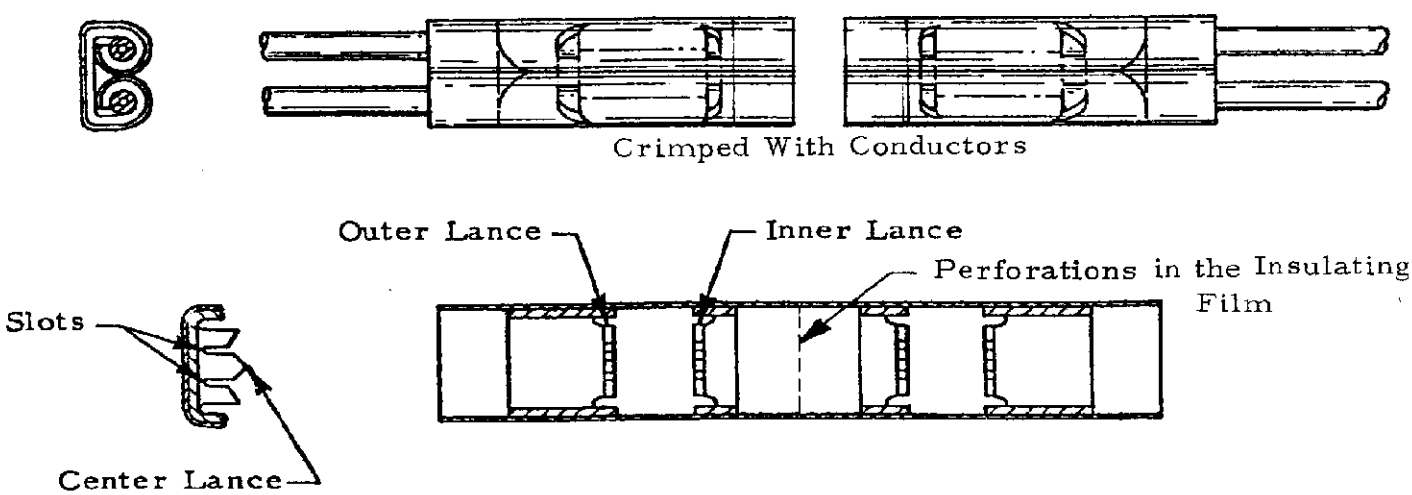

Figure 1

*Trademark of AMP Incorporated.

LTR	REVISION RECORD	APP	DATE

DIST 06

DR 4/7/81 CHK 4/7/81 APP 4-7-81

SHEET 1 OF 6

AMP | AMP INCORPORATED Harrisburg, Pa.

LOC B A NO 114-6006 REV 0

NAME CONNECTOR, PICABOND, LOAD COIL, BREAKAWAY, REGULAR AND WEATHER RESISTANT, APPLICATION OF

3. REQUIREMENTS

3.1. Splicing

Connector can be used to make the butt splice indicated in Figure 2.

Figure 2

3.2. Tooling

These connectors shall be mechanically crimped on insulated solid copper wires using a hand actuated or automated tool. Applicator tool usage and adjustment is specified on the appropriate instruction sheet furnished with the applicator. Only AMP manufactured or approved applicator shall be used.

3.3. Application

A. PICABOND breakaway load coil connectors provide an economical and reliable means to arrange large splices in pedestals and closures as butt splices, allowing easy reentry for rearrangements and ready identification of pairs. The capability to separate connector halves lends the connector to applications where one connector performs a function previously requiring two connectors. Examples of these applications would be section throws, transfers, and adding a cable length to provide sufficient slack for relocations of cable supporting poles. The connectors eliminate the requirement of stripping or cutting of wire ends.

B. Precision applicator tooling automatically trims wires to length during the crimping cycle, while within each connector half, 2 sets of double slotted lances displace the wire insulation, providing 2 reliable electrical contact points for each wire. Sides of the connector are crimped over the wires providing a mechanically strong connection.

3.4. Application Modes

The PICABOND breakaway load coil connector may be used in either of two modes when tapping apparatus with stub cables into transmission lines. However, Mode 1 should be used wherever possible.

A. Mode 1

Mode 1 utilizes 1 connector to join 2 legs of a device to 1 conductor of a transmission line pair. The other conductor of the transmission line pair is joined to 2 additional legs of the device by another connector. This is the Tip In-Out/Ring In-Out mode, see Figure 3.

B. Mode 2

Mode 2 utilizes 1 connector to join 1 side of both conductors of a transmission line pair to 2 legs of a device and another connector to join the 2 additional legs of the device to the other side of both conductors of the pair. This is the Tip-Ring In/Tip-Ring Out Mode, see Figure 4.

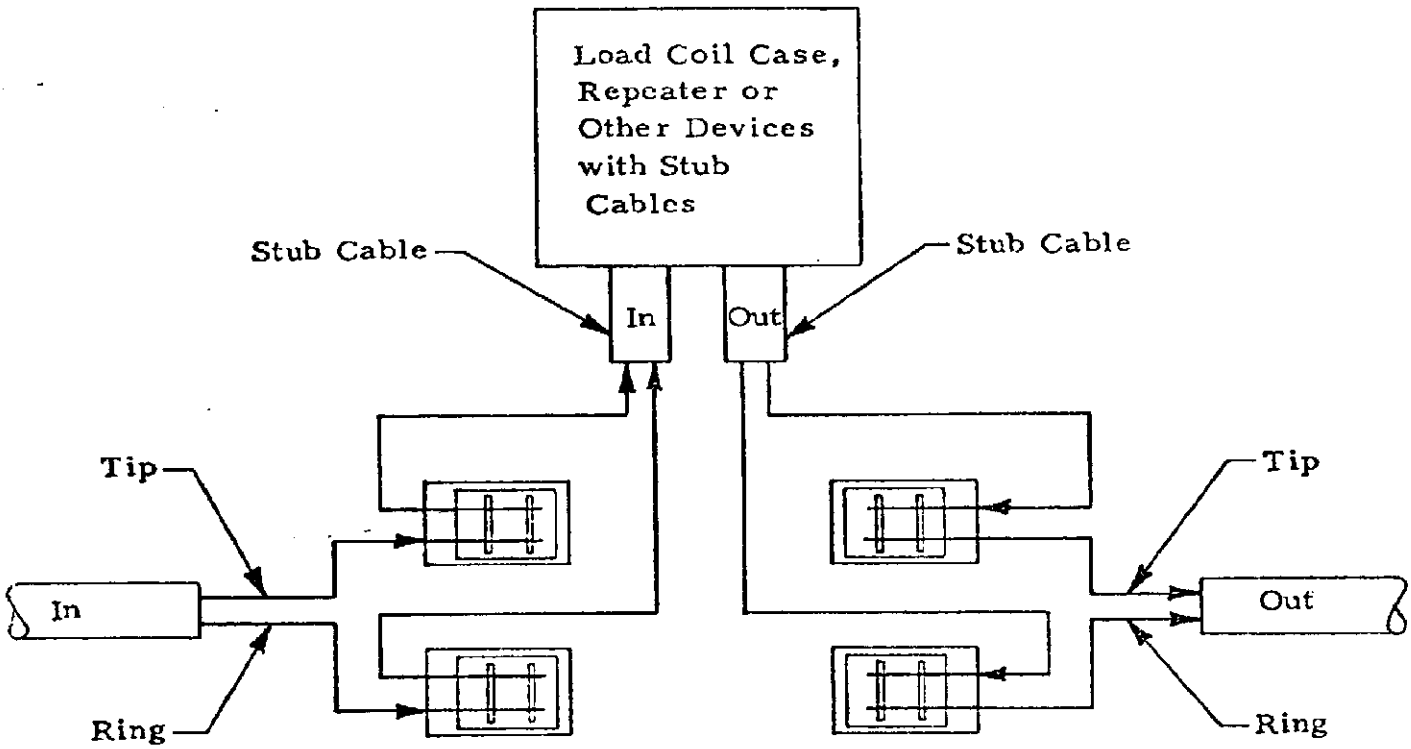

Figure 3

Tip In-Out/Ring In-Out, Mode 1

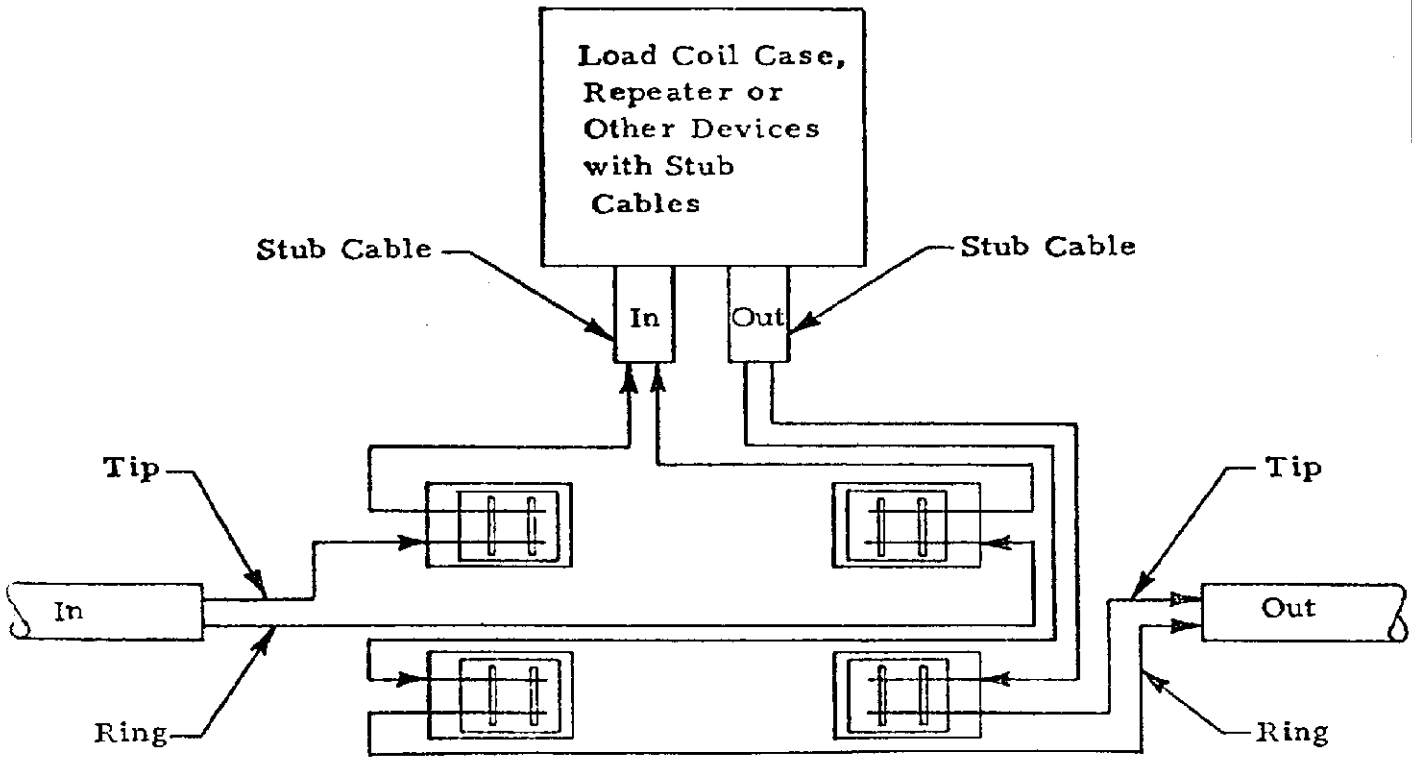

Figure 4

Tip-Ring In/Tip-Ring Out, Mode 2

3.5. Wire Insulation

Wire insulation may be plastic, pulp or paper.

3.6. Crimp Height

A. Crimp height shall be checked using AMP gage PN 679412-2 supplied with each tool and measured as indicated in Figure 5. This gage is available from AMP Incorporated by ordering kit PN 229230-1, which is gage PN 679412-2 with a cord attached.

B. Crimp height shall be checked immediately after crimping as follows:

(1) Select gage end with green and purple color dots that match connector color (green/amber or purple/amber connector) located in end with boss.

(2) Insert connector so that seam of connector faces single gage tooth and double rib (external) on gage. Connector end shall be flush with side of gage.

(3) Hold wires in end of connector half and slide gage off using very slight force. Repeat for other connector half.

(4) If either connector half sticks in gage, it is improperly crimped and shall be replaced.

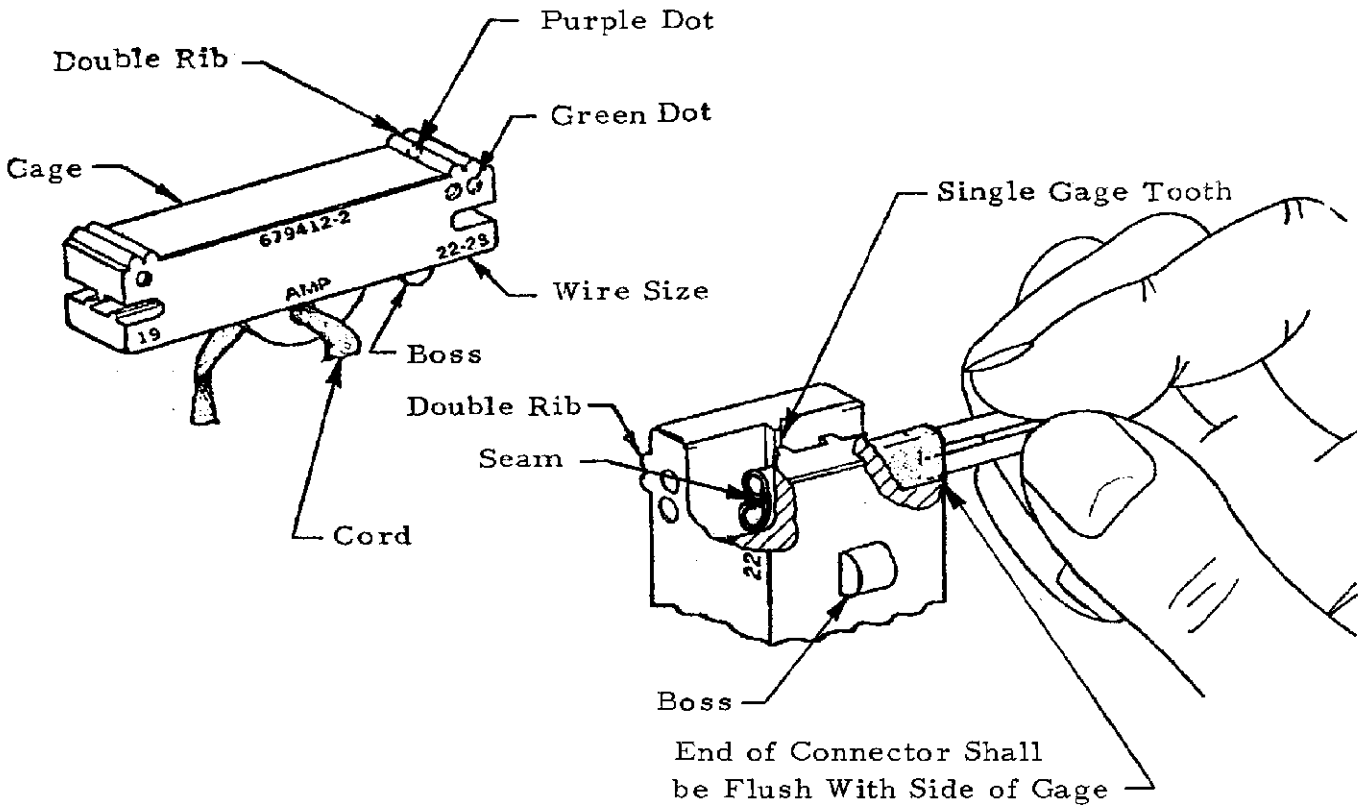

Figure 5

SHEET 5 OF 6	AMP	AMP INCORPORATED Harrisburg, Pa.		
	LOC B	A	NO 114-6006	REV 0
NAME CONNECTOR, PICABOND, LOAD COIL, BREAKAWAY, REGULAR AND WEATHER RESISTANT, APPLICATION OF				

3.7. Wire Protrusion

Bare wires shall not protrude from the separated end of the connector after termination.

3.8. Workmanship

Care shall be taken not to cut, score or crush the connector. Such conditions are due to foreign matter in crimper dies or on anvil and also disalignment of tooling.

Part Numbers		Wire Size	Color Code	Wire Insulation		Number of Wires Per Connector End
Strip	Loose Piece			Type (a)	Outside Dia Range	
REGULAR						
552647-1	552647-2	26-22 AWG .016-.025 dia (.40-.64 mm)	Green/ Amber	Non-filled Plastic Paper Pulp	.018-.056 (.46-1.4 mm)	2
WEATHER RESISTANT						
552769-1	552769-2	26-22 AWG .016-.025 dia (.40-.64 mm)	Purple/ Amber	Filled Plastic	.018-.056 (.46-1.4 mm)	2

(a) Insulation type listed is preferred, for other applications consult AMP Engineering.

Figure 6

Part Numbers