DATA SHEET

74AVCM162835

18-bit registered driver with 15 Ω termination resistors (3-State)

Product specification

2001 Apr 20

File under Integrated Circuits ICL03

Philips Semiconductors

PHILIPS

18-bit registered driver with 15 Ω termination resistors (3-State)

74AVCM162835

FEATURES

- Wide supply voltage range of 1.2 V to 3.6 V
- Complies with JEDEC standard no. 8-1A/5/7.
- CMOS low power consumption
- Input/output tolerant up to 3.6 V
- Low inductance multiple V_{CC} and GND pins for minimum noise and ground bounce
- Integrated 15 Ω termination resistors to minimize output overshoot and undershoot
- Full PC133 solution provided when used with PCK2510S and CBT16292

DESCRIPTION

The 74AVCM162835 is a 18-bit universal bus driver. Data flow is controlled by output enable ($\overline{OE}$), latch enable (LE) and clock inputs (CP).

This product is designed to have an extremely fast propagation delay and a minimum amount of power consumption.

To ensure the high-impedance state during power up or power down, $\overline{OE}$ should be tied to V_{CC} through a pullup resistor (Live Insertion).

PIN CONFIGURATION

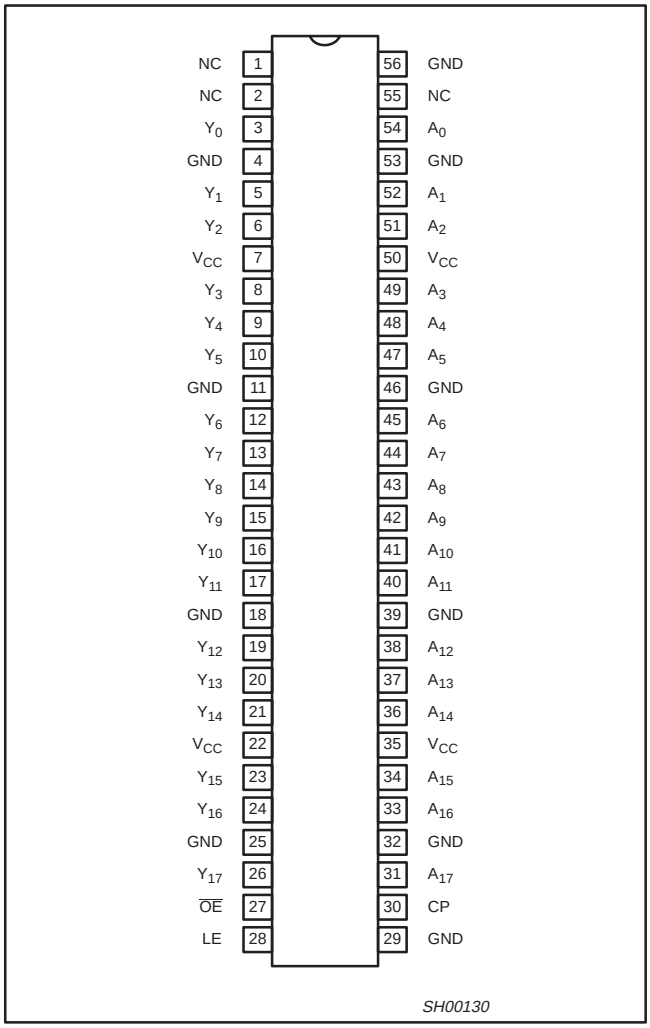

QUICK REFERENCE DATA

GND = 0 V; T_{amb} = 25 °C; $t_r = t_f \leq 2.0$ ns; C_L = 30 pF.

SYMBOL	PARAMETER	CONDITIONS		TYPICAL	UNIT
t_{PHL}/t_{PLH}	Propagation delay An to Yn	V_{CC} = 1.8 V V_{CC} = 2.5 V V_{CC} = 3.3 V		2.6 2.0 1.7	ns
t_{PHL}/t_{PLH}	Propagation delay LE to Yn; CP to Yn	V_{CC} = 1.8 V V_{CC} = 2.5 V V_{CC} = 3.3 V		2.8 2.2 1.8	ns
C_I	Input capacitance			5.0	pF
C_{PD}	Power dissipation capacitance per buffer	V_I = GND to V_{CC}[1]	Outputs enabled	25	pF
			Output disabled	6	

NOTES:

1. C_{PD} is used to determine the dynamic power dissipation (P_D in μW):
   $P_D = C_{PD} \times V_{CC}^2 \times f_i + \Sigma (C_L \times V_{CC}^2 \times f_o)$ where: f_i = input frequency in MHz; C_L = output load capacitance in pF; f_o = output frequency in MHz; V_{CC} = supply voltage in V; $\Sigma (C_L \times V_{CC}^2 \times f_o)$ = sum of outputs.

ORDERING INFORMATION

PACKAGES	TEMPERATURE RANGE	ORDER CODE	DRAWING NUMBER
56-Pin Plastic Thin Shrink Small Outline (TSSOP) Type II	–40 to +85 °C	74AVCM162835DGG	SOT364-1

PIN DESCRIPTION

PIN NUMBER	SYMBOL	NAME AND FUNCTION
1, 2, 55	NC	No connection
3, 5, 6, 8, 9, 10, 12, 13, 14, 15, 16, 17, 19, 20, 21, 23, 24, 26	Y_0 to Y_{17}	Data outputs
4, 11, 18, 25, 32, 39, 46, 53, 56	GND	Ground (0V)
7, 22, 35, 50	V_{CC}	Positive supply voltage
27	$\overline{OE}$	Output enable input (active LOW)
28	LE	Latch enable input (active HIGH)
30	CP	Clock input
54, 52, 51, 49, 48, 47, 45, 44, 43, 42, 41, 40, 38, 37, 36, 34, 33, 31	A_0 to A_{17}	Data inputs

LOGIC SYMBOL

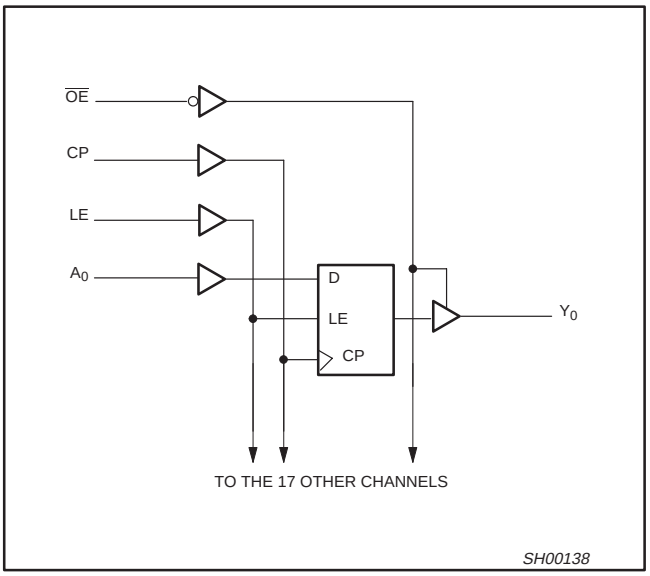

LOGIC SYMBOL (IEEE/IEC)

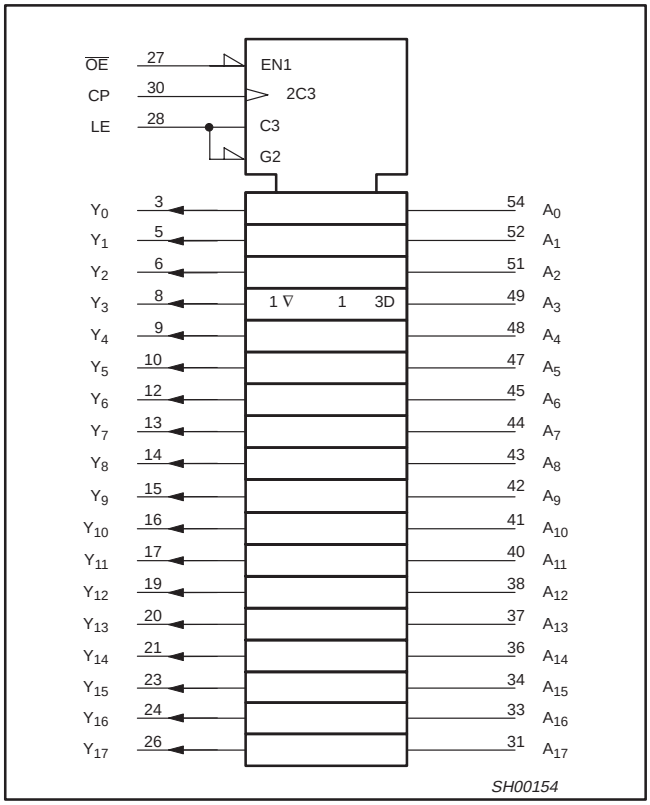

FUNCTION TABLE

INPUTS				OUTPUTS
$\overline{OE}$	LE	CP	A	
H	X	X	X	Z
L	H	X	L	L
L	H	X	H	H
L	L	↑	L	L
L	L	↑	H	H
L	L	H	X	Y_0[1]
L	L	L	X	Y_0[2]

H = HIGH voltage level
L = LOW voltage level
X = Don’t care
Z = High impedance “off” state
↑ = LOW-to-HIGH level transition

NOTES:
1. Output level before the indicated steady-state input conditions were established, provided that CP is high before LE goes low.
2. Output level before the indicated steady-state input conditions were established.

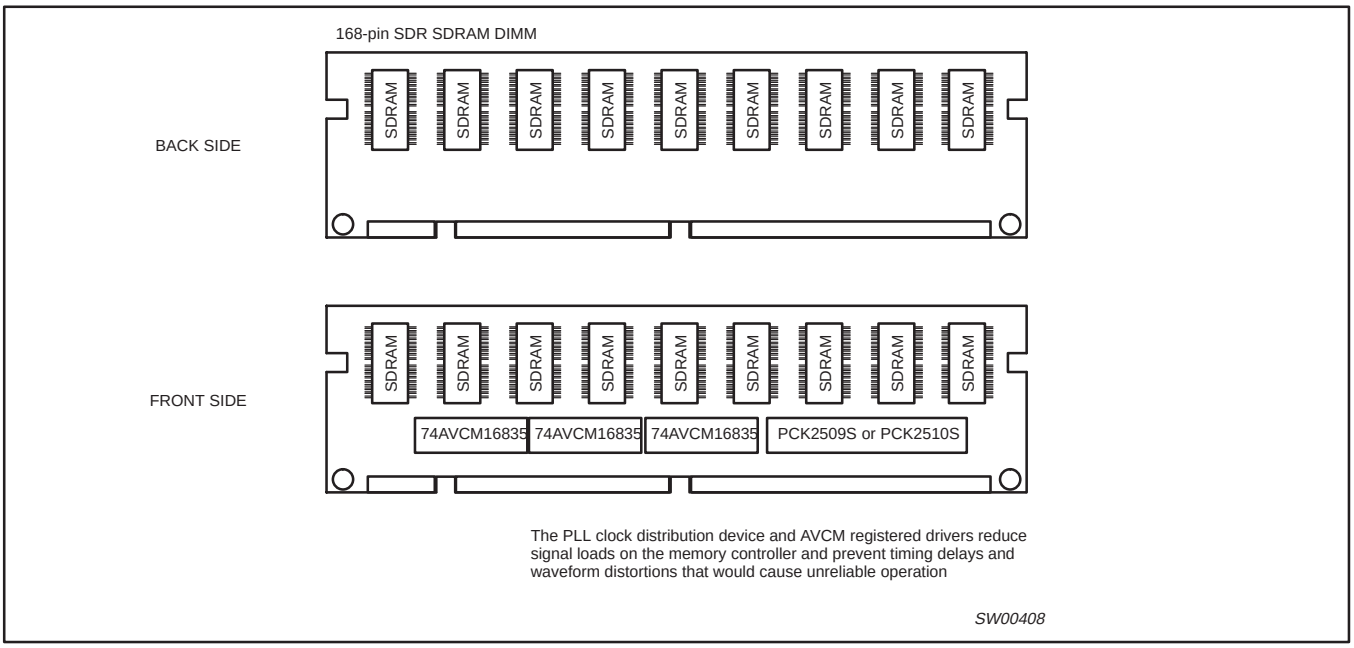

RECOMMENDED OPERATING CONDITIONS

SYMBOL	PARAMETER	CONDITIONS	MIN	MAX	UNIT
V_{CC}	DC supply voltage (according to JEDEC Low Voltage Standards)		1.65 2.3 3.0	1.95 2.7 3.6	V
	DC supply voltage (for low voltage applications)		1.2	3.6	
V_I	DC Input voltage range		0	3.6	V
V_O	DC output voltage range; output 3-State		0	3.6	V
	DC output voltage range; output HIGH or LOW state		0	V_{CC}	
T_{amb}	Operating free-air temperature range		–40	+85	°C
t_r, t_f	Input rise and fall times	V_{CC} = 1.65 to 2.3 V V_{CC} = 2.3 to 3.0 V V_{CC} = 3.0 to 3.6 V	0 0 0	30 20 10	ns/V

ABSOLUTE MAXIMUM RATINGS

In accordance with the Absolute Maximum Rating System (IEC 134)
Voltages are referenced to GND (ground = 0 V)

SYMBOL	PARAMETER	CONDITIONS	RATING	UNIT
V_{CC}	DC supply voltage		–0.5 to +4.6	V
I_{IK}	DC input diode current	$V_I < 0$	–50	mA
V_I	DC input voltage	For all inputs[1]	–0.5 to 4.6	V
I_{OK}	DC output diode current	$V_O > V_{CC}$ or $V_O < 0$	±50	mA
V_O	DC output voltage; output 3-State	Note 1	–0.5 to 4.6	V
V_O	DC output voltage; output HIGH or LOW state	Note 1	–0.5 to V_{CC} +0.5	V
I_O	DC output source or sink current	V_O = 0 to V_{CC}	±50	mA
I_{GND}, I_{CC}	DC V_{CC} or GND current		±100	mA
T_{stg}	Storage temperature range		–65 to +150	°C
P_{TOT}	Power dissipation per package –plastic thin-medium-shrink (TSSOP)	For temperature range: –40 to +125 °C above +55 °C derate linearly with 8 mW/K	600	mW

NOTE:
1. The input and output voltage ratings may be exceeded if the input and output current ratings are observed.

DC ELECTRICAL CHARACTERISTICS

Over recommended operating conditions. Voltage are referenced to GND (ground = 0 V).

SYMBOL	PARAMETER	TEST CONDITIONS	LIMITS Temp = –40 to +85 °C			UNIT
			MIN	TYP[1]	MAX	
V_{IH}	HIGH level Input voltage	V_{CC} = 1.2 V	V_{CC}	–	–	V
		V_{CC} = 1.65 to 1.95 V	0.65V_{CC}	0.9	–	
		V_{CC} = 2.3 to 2.7 V	1.7	1.2	–	
		V_{CC} = 3.0 to 3.6 V	2.0	1.5	–	
V_{IL}	LOW level Input voltage	V_{CC} = 1.2 V	–	–	GND	V
		V_{CC} = 1.65 to 1.95 V	–	0.9	0.35V_{CC}	
		V_{CC} = 2.3 to 2.7 V	–	1.2	0.7	
		V_{CC} = 3.0 to 3.6 V	–	1.5	0.8	
V_{OH}	HIGH level output voltage	V_{CC} = 1.65 to 3.6 V; $V_I = V_{IH}$ or V_{IL}; I_O = –100 μA	V_{CC} – 0.20	V_{CC}	–	V
		V_{CC} = 1.65 V; $V_I = V_{IH}$ or V_{IL}; I_O = –4 mA	V_{CC} – 0.45	V_{CC} – 0.10	–	
		V_{CC} = 2.3 V; $V_I = V_{IH}$ or V_{IL}; I_O = –8 mA	V_{CC} – 0.55	V_{CC} – 0.28	–	
		V_{CC} = 3.0 V; $V_I = V_{IH}$ or V_{IL}; I_O = –12 mA	V_{CC} – 0.70	V_{CC} – 0.32	–	
V_{OL}	LOW level output voltage	V_{CC} = 1.65 to 3.6 V; $V_I = V_{IH}$ or V_{IL}; I_O = 100 μA	–	GND	0.20	V
		V_{CC} = 1.65 V; $V_I = V_{IH}$ or V_{IL}; I_O = 4 mA	–	0.10	0.45	
		V_{CC} = 2.3 V; $V_I = V_{IH}$ or V_{IL}; I_O = 8 mA	–	0.26	0.55	
		V_{CC} = 3.0 V; $V_I = V_{IH}$ or V_{IL}; I_O = 12 mA	–	0.36	0.70	
I_I	Input leakage current	V_{CC} = 1.65 to 3.6 V; $V_I = V_{CC}$ or GND	–	0.1	2.5	μA
I_{OFF}	3-State output OFF-state current	V_{CC} = 0 V; V_I or V_O = 3.6 V	–	0.1	±10	μA
I_{IHZ}/I_{ILZ}	3-State output OFF-state current	V_{CC} = 1.65 to 3.6 V; $V_I = V_{CC}$ or GND	–	0.1	12.5	μA
I_{OZ}	3-State output OFF-state current	V_{CC} = 1.65 to 2.7 V; $V_I = V_{IH}$ or V_{IL}; $V_O = V_{CC}$ or GND	–	0.1	5	μA
		V_{CC} = 3.0 to 3.6 V; $V_I = V_{IH}$ or V_{IL}; $V_O = V_{CC}$ or GND	–	0.1	10	
I_{CC}	Quiescent supply current	V_{CC} = 1.65 to 2.7 V; $V_I = V_{CC}$ or GND; I_O = 0	–	0.1	20	μA
		V_{CC} = 3.0 to 3.6 V; $V_I = V_{CC}$ or GND; I_O = 0	–	0.2	40	

NOTES:
1. All typical values are at T_{amb} = 25 °C.

AC CHARACTERISTICS

GND = 0 V; $t_r = t_f \leq 2.0$ ns; $C_L = 30$ pF

SYMBOL	PARAMETER	WAVE-FORM	LIMITS											UNIT
			$V_{CC} = 3.3 \pm 0.3$ V			$V_{CC} = 2.5 \pm 0.2$ V			$V_{CC} = 1.8 \pm 0.15$ V			$V_{CC} = 1.2$ V		
			MIN	TYP[1]	MAX	MIN	TYP[1]	MAX	MIN	TYP[1]	MAX	MIN	TYP	
t_{PHL}/t_{PLH}	Propagation delay An to Yn	1, 7	0.7	1.7	2.5	0.8	2.0	3.1	1.0	2.6	4.5	–	5.2	ns
	Propagation delay LE to Yn	2, 7	0.7	1.8	2.7	0.8	2.2	3.3	1.0	2.8	5.0	–	5.6	
	Propagation delay CP to Yn	3, 7	0.7	1.7	2.5	0.8	2.0	3.0	1.0	2.6	4.5	–	5.2	
t_{PZH}/t_{PZL}	3-State output enable time $\overline{OE}$ to Yn	6, 7	1.0	2.3	4.5	1.0	2.5	4.5	1.5	3.0	6.5	–	5.5	ns
t_{PHZ}/t_{PLZ}	3-State output disable time $\overline{OE}$ to Yn	6, 7	1.0	2.3	3.5	1.0	2.2	4.0	1.5	3.5	6.5	–	6.9	ns
t_W	CP pulse width HIGH or LOW	3, 7	1.0	–	–	1.2	–	–	2.0	–	–	–	–	ns
	LE pulse width HIGH	2, 7	1.0	–	–	1.2	–	–	2.0	–	–	–	–	
t_{SU}	Set-up time An to CP	5, 7	0.7	–	–	0.7	–	–	0.7	–	–	1.0	–	ns
	Set-up time An to LE HIGH	4, 7	0.5	–	–	0.5	–	–	0.5	–	–	0.2	–	
	Set-up time An to LE LOW	4, 7	0.5	–	–	0.5	–	–	0.6	–	–	2.0	–	ns
t_h	Hold time An to CP	5, 7	0.9	–	–	0.9	–	–	1.0	–	–	1.5	–	ns
	Hold time An to LE HIGH	4, 7	1.6	–	–	1.7	–	–	2.0	–	–	3.2	–	
	Hold time An to LE LOW	4, 7	1.4	–	–	1.5	–	–	1.7	–	–	2.8	–	ns
F_{max}	Maximum clock pulse frequency	3, 7	500	–	–	400	–	–	250	–	–	–	–	MHz

NOTES:

1. All typical values are measured at $T_{amb} = 25$ °C and at $V_{CC} = 1.8$ V, 2.5 V, 3.3 V.

AC WAVEFORMS FOR V_{CC} = 3.0 V TO 3.6 V RANGE

$V_M = 0.5\ V_{CC}$
$V_X = V_{OL} + 0.300\ V$
$V_Y = V_{OH} – 0.300\ V$
V_{OL} and V_{OH} are the typical output voltage drop that occur with the output load.
$V_I = V_{CC}$

AC WAVEFORMS FOR V_{CC} = 2.3 V TO 2.7 V AND V_{CC} < 2.3 V RANGE

$V_M = 0.5\ V_{CC}$
$V_X = V_{OL} + 0.15\ V$
$V_Y = V_{OH} – 0.15\ V$
V_{OL} and V_{OH} are the typical output voltage drop that occur with the output load.
$V_I = V_{CC}$

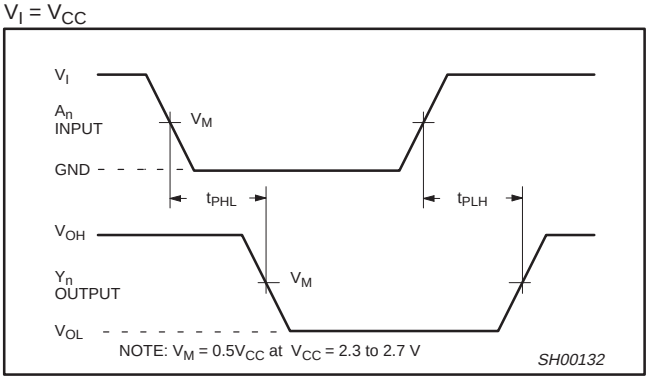

Waveform 1. Input (An) to output (Yn) propagation delay

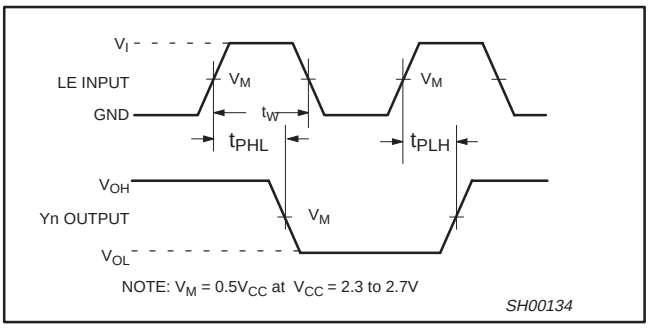

Waveform 2. Latch enable input (LE) pulse width, the latch enable input to output (Yn) propagation delays.

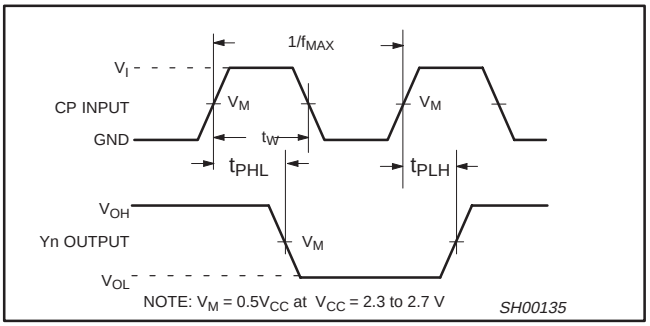

Waveform 3. The clock (CP) to Yn propagation delays, the clock pulse width and the maximum clock frequency.

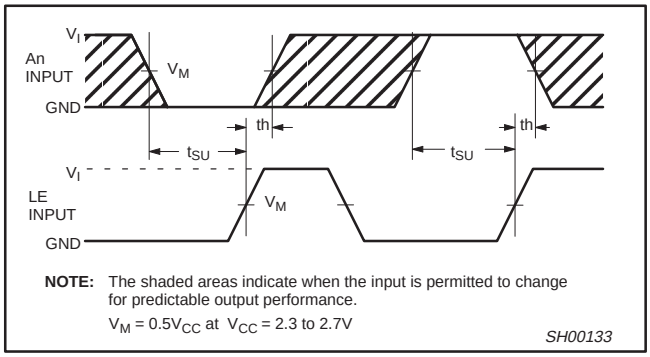

Waveform 4. Data set-up and hold times for the An input to the LE input

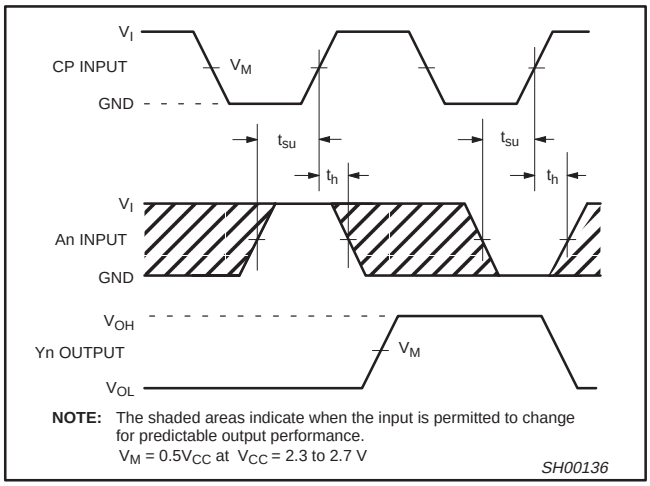

Waveform 5. Data set-up and hold times for the An input to the clock CP input

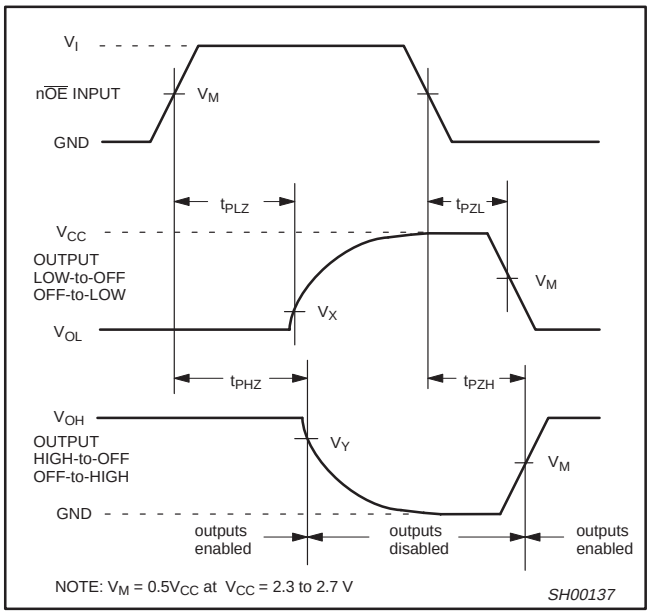

Waveform 6. 3-State enable and disable times

TEST CIRCUIT

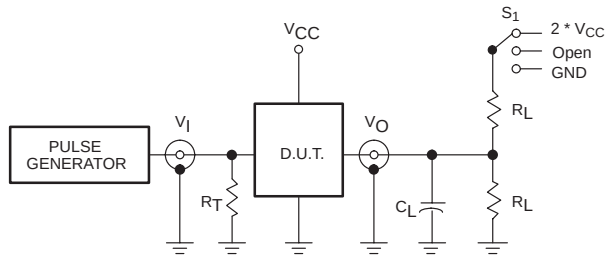

Test Circuit for switching times

DEFINITIONS

R_L = Load resistor

C_L = Load capacitance includes jig and probe capacitance

R_T = Termination resistance should be equal to Z_{OUT} of pulse generators.

SWITCH POSITION

TEST	S_1
t_{PLH}/t_{PHL}	Open
t_{PLZ}/t_{PZL}	2 * V_{CC}
t_{PHZ}/t_{PZH}	GND

V_{CC}	V_I	R_L
< 2.3 V	V_{CC}	1000 Ω
2.3–2.7 V	V_{CC}	500 Ω
3.0 –3.6 V	V_{CC}	500 Ω

SV01883

Waveform 7. Load circuitry for switching times

TSSOP56: plastic thin shrink small outline package; 56 leads; body width 6.1 mm SOT364-1

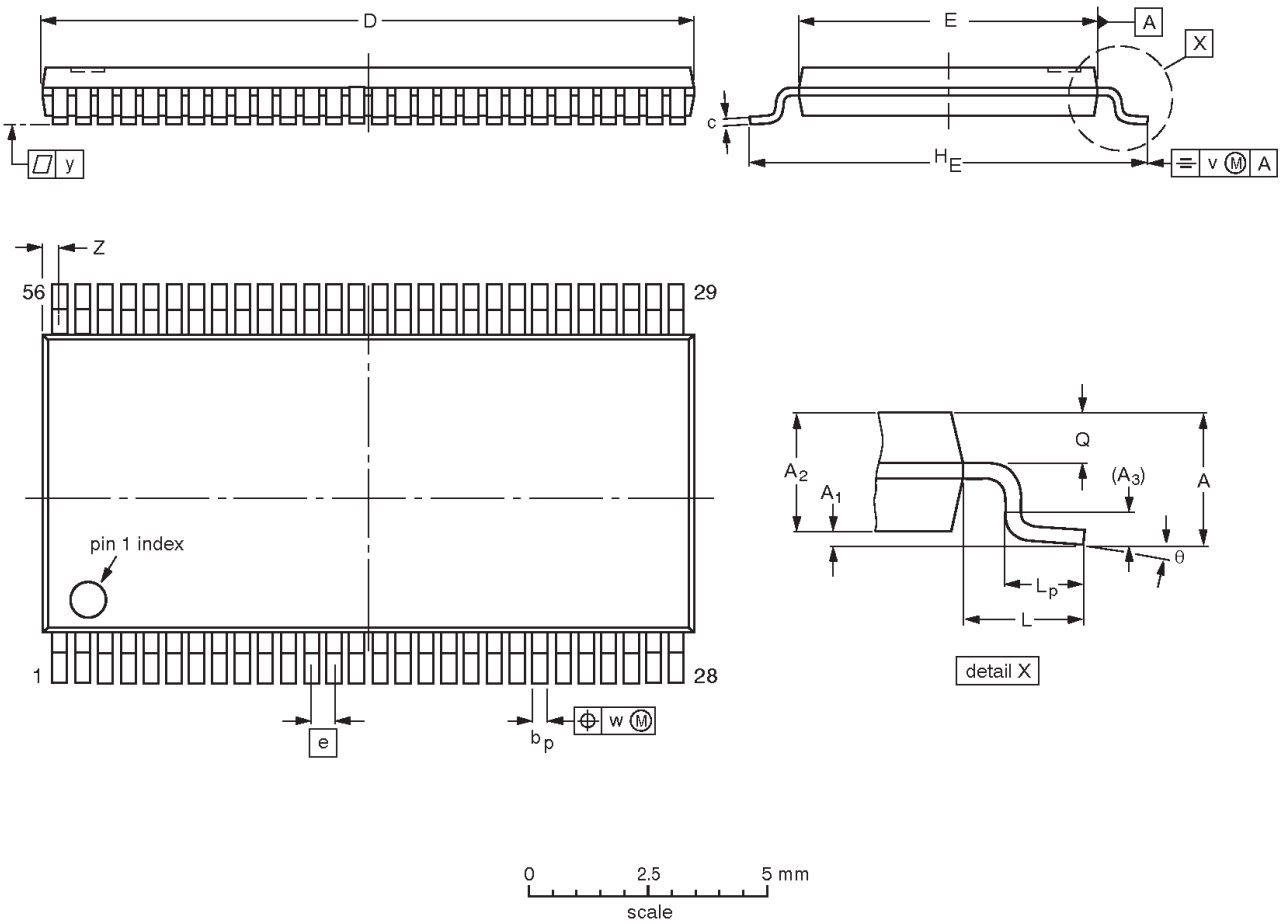

DIMENSIONS (mm are the original dimensions).

UNIT	A max.	A_1	A_2	A_3	b_p	c	D(1)	E(2)	e	H_E	L	L_p	Q	v	w	y	Z	θ
mm	1.2	0.15 0.05	1.05 0.85	0.25	0.28 0.17	0.2 0.1	14.1 13.9	6.2 6.0	0.5	8.3 7.9	1.0	0.8 0.4	0.50 0.35	0.25	0.08	0.1	0.5 0.1	8° 0°

Notes

1. Plastic or metal protrusions of 0.15 mm maximum per side are not included.
2. Plastic interlead protrusions of 0.25 mm maximum per side are not included.

OUTLINE VERSION	REFERENCES					EUROPEAN PROJECTION	ISSUE DATE
	IEC	JEDEC	EIAJ				
SOT364-1		MO-153					~~95-02-10~~ 99-12-27

Data sheet status

Data sheet status	Product status	Definition [1]
Objective specification	Development	This data sheet contains the design target or goal specifications for product development. Specification may change in any manner without notice.
Preliminary specification	Qualification	This data sheet contains preliminary data, and supplementary data will be published at a later date. Philips Semiconductors reserves the right to make changes at any time without notice in order to improve design and supply the best possible product.
Product specification	Production	This data sheet contains final specifications. Philips Semiconductors reserves the right to make changes at any time without notice in order to improve design and supply the best possible product.

[1] Please consult the most recently issued datasheet before initiating or completing a design.

Definitions

Short-form specification — The data in a short-form specification is extracted from a full data sheet with the same type number and title. For detailed information see the relevant data sheet or data handbook.

Limiting values definition — Limiting values given are in accordance with the Absolute Maximum Rating System (IEC 134). Stress above one or more of the limiting values may cause permanent damage to the device. These are stress ratings only and operation of the device at these or at any other conditions above those given in the Characteristics sections of the specification is not implied. Exposure to limiting values for extended periods may affect device reliability.

Application information — Applications that are described herein for any of these products are for illustrative purposes only. Philips Semiconductors make no representation or warranty that such applications will be suitable for the specified use without further testing or modification.

Disclaimers

Life support — These products are not designed for use in life support appliances, devices or systems where malfunction of these products can reasonably be expected to result in personal injury. Philips Semiconductors customers using or selling these products for use in such applications do so at their own risk and agree to fully indemnify Philips Semiconductors for any damages resulting from such application.

Right to make changes — Philips Semiconductors reserves the right to make changes, without notice, in the products, including circuits, standard cells, and/or software, described or contained herein in order to improve design and/or performance. Philips Semiconductors assumes no responsibility or liability for the use of any of these products, conveys no license or title under any patent, copyright, or mask work right to these products, and makes no representations or warranties that these products are free from patent, copyright, or mask work right infringement, unless otherwise specified.

Philips Semiconductors
811 East Arques Avenue
P.O. Box 3409
Sunnyvale, California 94088–3409
Telephone 800-234-7381

© Copyright Philips Electronics North America Corporation 2001
All rights reserved. Printed in U.S.A.

print code Date of release: 04-01
Document order number: 9397-750-08283

Let's make things better.

Philips Semiconductors

PHILIPS