74LVC1G53

2-channel analog multiplexer/demultiplexer

Rev. 05 — 11 June 2008 Product data sheet

1. General description

The 74LVC1G53 is a low-power, low-voltage, high-speed, Si-gate CMOS device.

The 74LVC1G53 provides one analog multiplexer/demultiplexer with a digital select input (S), two independent inputs/outputs (Y0 and Y1), a common input/output (Z) and an active LOW enable input ($\overline{E}$). When pin $\overline{E}$ is HIGH, the switch is turned off.

Schmitt-trigger action at the select and enable inputs makes the circuit tolerant of slower input rise and fall times across the entire V_{CC} range from 1.65 V to 5.5 V.

2. Features

- Wide supply voltage range from 1.65 V to 5.5 V
- Very low ON resistance:
  - 7.5 Ω (typical) at V_{CC} = 2.7 V
  - 6.5 Ω (typical) at V_{CC} = 3.3 V
  - 6 Ω (typical) at V_{CC} = 5 V
- Switch current capability of 32 mA
- High noise immunity
- CMOS low-power consumption
- TTL interface compatibility at 3.3 V
- Latch-up performance meets requirements of JESD 78 Class I
- ESD protection:
  - HBM JESD22-A114E exceeds 2000 V
  - MM JESD22-A115-A exceeds 200 V
  - CDM JESD22-C101C exceeds 1000 V
- Control inputs accepts voltages up to 5 V
- Multiple package options
- Specified from –40 °C to +85 °C and from –40 °C to +125 °C

founded by Philips

3. Ordering information

Table 1. Ordering information

Type number	Package			
	Temperature range	Name	Description	Version
74LVC1G53DP	–40 °C to +125 °C	TSSOP8	plastic thin shrink small outline package; 8 leads; body width 3 mm; lead length 0.5 mm	SOT505-2
74LVC1G53DC	–40 °C to +125 °C	VSSOP8	plastic very thin shrink small outline package; 8 leads; body width 2.3 mm	SOT765-1
74LVC1G53GT	–40 °C to +125 °C	XSON8	plastic extremely thin small outline package; no leads; 8 terminals; body 1 × 1.95 × 0.5 mm	SOT833-1
74LVC1G53GD	–40 °C to +125 °C	XSON8U	plastic extremely thin small outline package; no leads; 8 terminals; UTLP based; body 3 × 2 × 0.5 mm	SOT996-2
74LVC1G53GM	–40 °C to +125 °C	XQFN8U	plastic extremely thin quad flat package; no leads; 8 terminals; UTLP based; body 1.6 × 1.6 × 0.5 mm	SOT902-1

4. Marking

Table 2. Marking codes

Type number	Marking code
74LVC1G53DC	V53
74LVC1G53DP	V53
74LVC1G53GT	V53
74LVC1G53GD	V53
74LVC1G53GM	V53

5. Functional diagram

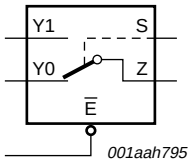

Fig 1. Logic symbol

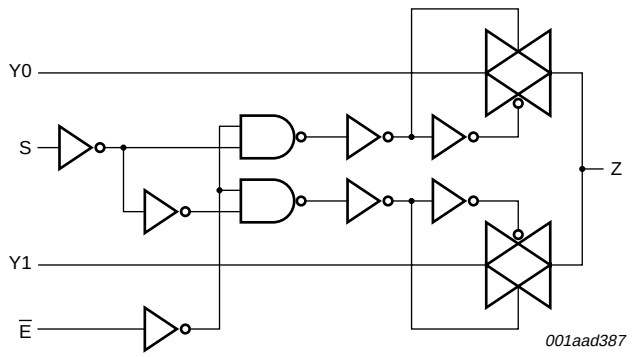

Fig 2. Logic diagram

6. Pinning information

6.1 Pinning

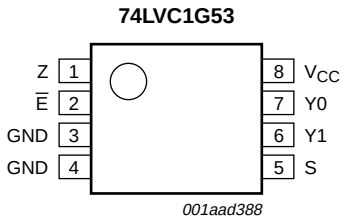

Fig 3. Pin configuration SOT505-2 (TSSOP8) and SOT765-1 (VSSOP8)

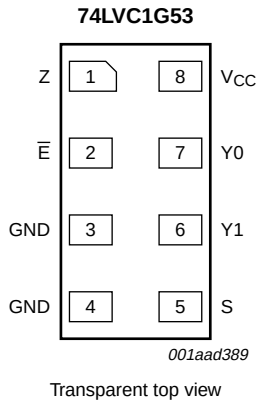

Fig 4. Pin configuration SOT833-1 (XSON8)

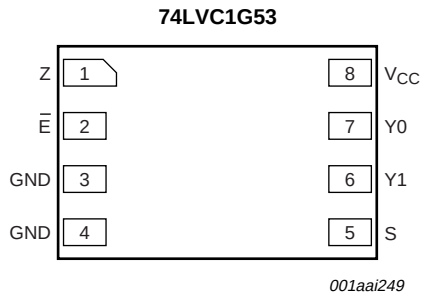

Fig 5. Pin configuration SOT996-2 (XSON8U)

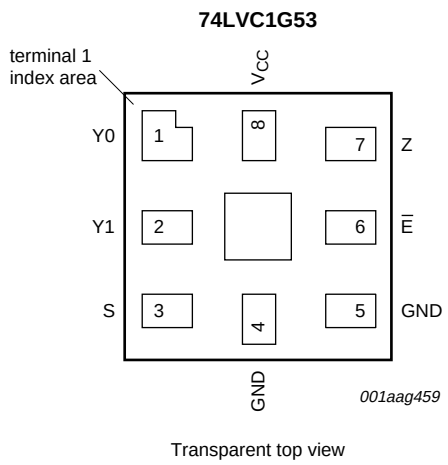

Fig 6. Pin configuration SOT902-1 (XQFN8U)

6.2 Pin description

Table 3. Pin description

Symbol	Pin		Description
	SOT505-2, SOT765-1, SOT996-2 and SOT833-1	SOT902-1	
Z	1	7	common output or input
$\overline{E}$	2	6	enable input (active LOW)
GND	3	5	ground (0 V)
GND	4	4	ground (0 V)
S	5	3	select input
Y1	6	2	independent input or output
Y0	7	1	independent input or output
V_{CC}	8	8	supply voltage

7. Functional description

Table 4. Function table[1]

Input		Channel on
S	$\overline{E}$	
L	L	Y0 to Z or Z to Y0
H	L	Y1 to Z or Z to Y1
X	H	Z (switch off)

[1] H = HIGH voltage level; L = LOW voltage level; X = don't care; Z = high-impedance OFF-state.

8. Limiting values

Table 5. Limiting values

In accordance with the Absolute Maximum Rating System (IEC 60134). Voltages are referenced to GND (ground = 0 V).

Symbol	Parameter	Conditions		Min	Max	Unit
V_{CC}	supply voltage			–0.5	+6.5	V
V_I	input voltage		[1]	–0.5	+6.5	V
I_{IK}	input clamping current	V_I < –0.5 V or V_I > V_{CC} + 0.5 V		–50	-	mA
I_{SK}	switch clamping current	V_I < –0.5 V or V_I > V_{CC} + 0.5 V		-	±50	mA
V_{SW}	switch voltage	enable and disable mode	[2]	–0.5	V_{CC} + 0.5	V
I_{SW}	switch current	V_{SW} > –0.5 V or V_{SW} < V_{CC} + 0.5 V		-	±50	mA
I_{CC}	supply current			-	100	mA
I_{GND}	ground current			–100	-	mA
T_{stg}	storage temperature			–65	+150	°C
P_{tot}	total power dissipation	T_{amb} = –40 °C to +125 °C	[3]	-	250	mW

[1] The minimum input voltage rating may be exceeded if the input current rating is observed.

[2] The minimum and maximum switch voltage ratings may be exceeded if the switch clamping current rating is observed.

[3] For TSSOP8 packages: above 55 °C the value of P_{tot} derates linearly with 2.5 mW/K.
For VSSOP8 packages: above 110 °C the value of P_{tot} derates linearly with 8.0 mW/K.
For XSON8, XSON8U and XQFN8U packages: above 45 °C the value of P_{tot} derates linearly with 2.4 mW/K.

9. Recommended operating conditions

Table 6. Operating conditions

Symbol	Parameter	Conditions		Min	Max	Unit
V_{CC}	supply voltage			1.65	5.5	V
V_I	input voltage			0	5.5	V
V_{SW}	switch voltage	enable and disable mode	[1]	0	V_{CC}	V
T_{amb}	ambient temperature			–40	+125	°C
Δt/ΔV	input transition rise and fall rate	V_{CC} = 1.65 V to 2.7 V	[2]	-	20	ns/V
		V_{CC} = 2.7 V to 5.5 V	[2]	-	10	ns/V

[1] To avoid sinking GND current from terminal Z when switch current flows in terminal Yn, the voltage drop across the bidirectional switch must not exceed 0.4 V. If the switch current flows into terminal Z, no GND current will flow from terminal Yn. In this case, there is no limit for the voltage drop across the switch.

[2] Applies to control signal levels.

10. Static characteristics

Table 7. Static characteristics

At recommended operating conditions; voltages are referenced to GND (ground 0 V).

Symbol	Parameter	Conditions		T_{amb} = −40 °C to +85 °C			T_{amb} = −40 °C to +125 °C		Unit
				Min	Typ[1]	Max	Min	Max	
V_{IH}	HIGH-level input voltage	V_{CC} = 1.65 V to 1.95 V		0.65 × V_{CC}	-	-	0.65 × V_{CC}	-	V
		V_{CC} = 2.3 V to 2.7 V		1.7	-	-	1.7	-	V
		V_{CC} = 3 V to 3.6 V		2.0	-	-	2.0	-	V
		V_{CC} = 4.5 V to 5.5 V		0.7 × V_{CC}	-	-	0.7 × V_{CC}	-	V
V_{IL}	LOW-level input voltage	V_{CC} = 1.65 V to 1.95 V		-	-	0.35 × V_{CC}	-	0.35 × V_{CC}	V
		V_{CC} = 2.3 V to 2.7 V		-	-	0.7	-	0.7	V
		V_{CC} = 3 V to 3.6 V		-	-	0.8	-	0.8	V
		V_{CC} = 4.5 V to 5.5 V		-	-	0.3 × V_{CC}	-	0.3 × V_{CC}	V
I_I	input leakage current	pin S and pin $\overline{E}$; V_I = 5.5 V or GND; V_{CC} = 0 V to 5.5 V	[2]	-	±0.1	±2	-	±10	μA
$I_{S(OFF)}$	OFF-state leakage current	V_I = V_{IH} or V_{IL}; V_{CC} = 5.5 V; see Figure 7	[2]	-	±0.1	±5	-	±20	μA
$I_{S(ON)}$	ON-state leakage current	V_I = V_{IH} or V_{IL}; V_{CC} = 5.5 V; see Figure 8	[2]	-	±0.1	±5	-	±20	μA
I_{CC}	supply current	V_I = 5.5 V or GND; V_{SW} = GND or V_{CC}; I_O = 0 A; V_{CC} = 1.65 V to 5.5 V	[2]	-	0.1	10	-	40	μA
ΔI_{CC}	additional supply current	pin S and pin $\overline{E}$; V_I = V_{CC} − 0.6 V; I_O = 0 A; V_{SW} = GND or V_{CC}; V_{CC} = 5.5 V	[2]	-	5	500	-	5000	μA
C_I	input capacitance			-	2.5	-	-	-	pF
$C_{S(OFF)}$	OFF-state capacitance			-	6.0	-	-	-	pF
$C_{S(ON)}$	ON-state capacitance			-	18	-	-	-	pF

[1] Typical values are measured at T_{amb} = 25 °C.

[2] These typical values are measured at V_{CC} = 3.3 V.

10.1 Test circuits

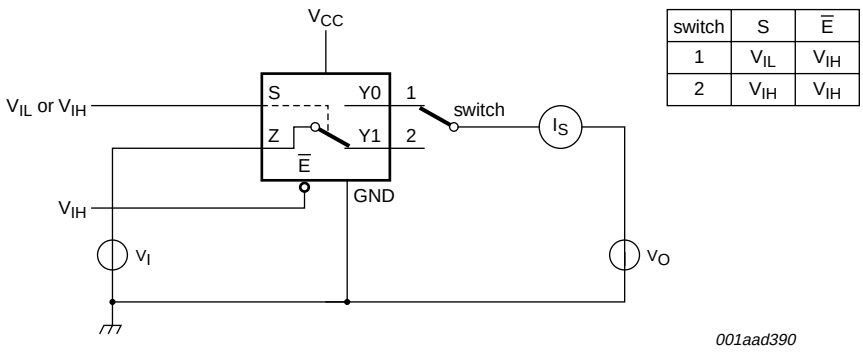

switch	S	$\overline{E}$
1	V_{IL}	V_{IH}
2	V_{IH}	V_{IH}

$V_I = V_{CC}$ or GND; V_O = GND or V_{CC}.

Fig 7. Test circuit for measuring OFF-state leakage current

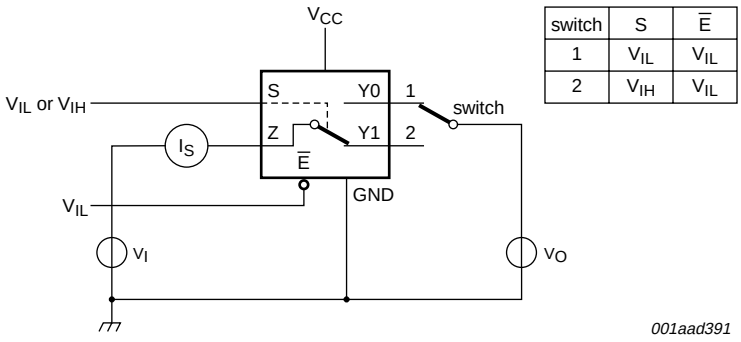

switch	S	$\overline{E}$
1	V_{IL}	V_{IL}
2	V_{IH}	V_{IL}

$V_I = V_{CC}$ or GND and V_O = open circuit.

Fig 8. Test circuit for measuring ON-state leakage current

10.2 ON resistance

Table 8. ON resistance

At recommended operating conditions; voltages are referenced to GND (ground 0 V); for graphs see Figure 10 to Figure 15.

Symbol	Parameter	Conditions	–40 °C to +85 °C			–40 °C to +125 °C		Unit
			Min	Typ[1]	Max	Min	Max	
$R_{ON(peak)}$	ON resistance (peak)	V_I = GND to V_{CC}; see Figure 9						
		I_{SW} = 4 mA; V_{CC} = 1.65 V to 1.95 V	-	34.0	130	-	195	Ω
		I_{SW} = 8 mA; V_{CC} = 2.3 V to 2.7 V	-	12.0	30	-	45	Ω
		I_{SW} = 12 mA; V_{CC} = 2.7 V	-	10.4	25	-	38	Ω
		I_{SW} = 24 mA; V_{CC} = 3 V to 3.6 V	-	7.8	20	-	30	Ω
		I_{SW} = 32 mA; V_{CC} = 4.5 V to 5.5 V	-	6.2	15	-	23	Ω

Table 8. ON resistance *...continued*

At recommended operating conditions; voltages are referenced to GND (ground 0 V); for graphs see Figure 10 to Figure 15.

Symbol	Parameter	Conditions	–40 °C to +85 °C			–40 °C to +125 °C		Unit
			Min	Typ[1]	Max	Min	Max	
$R_{ON(rail)}$	ON resistance (rail)	V_I = GND; see Figure 9						
		I_{SW} = 4 mA; V_{CC} = 1.65 V to 1.95 V	-	8.2	18	-	27	Ω
		I_{SW} = 8 mA; V_{CC} = 2.3 V to 2.7 V	-	7.1	16	-	24	Ω
		I_{SW} = 12 mA; V_{CC} = 2.7 V	-	6.9	14	-	21	Ω
		I_{SW} = 24 mA; V_{CC} = 3 V to 3.6 V	-	6.5	12	-	18	Ω
		I_{SW} = 32 mA; V_{CC} = 4.5 V to 5.5 V	-	5.8	10	-	15	Ω
		V_I = V_{CC}; see Figure 9						
		I_{SW} = 4 mA; V_{CC} = 1.65 V to 1.95 V	-	10.4	30	-	45	Ω
		I_{SW} = 8 mA; V_{CC} = 2.3 V to 2.7 V	-	7.6	20	-	30	Ω
		I_{SW} = 12 mA; V_{CC} = 2.7 V	-	7.0	18	-	27	Ω
		I_{SW} = 24 mA; V_{CC} = 3 V to 3.6 V	-	6.1	15	-	23	Ω
		I_{SW} = 32 mA; V_{CC} = 4.5 V to 5.5 V	-	4.9	10	-	15	Ω
$R_{ON(flat)}$	ON resistance (flatness)	V_I = GND to V_{CC} [2]						
		I_{SW} = 4 mA; V_{CC} = 1.65 V to 1.95 V	-	26.0	-	-	-	Ω
		I_{SW} = 8 mA; V_{CC} = 2.3 V to 2.7 V	-	5.0	-	-	-	Ω
		I_{SW} = 12 mA; V_{CC} = 2.7 V	-	3.5	-	-	-	Ω
		I_{SW} = 24 mA; V_{CC} = 3 V to 3.6 V	-	2.0	-	-	-	Ω
		I_{SW} = 32 mA; V_{CC} = 4.5 V to 5.5 V	-	1.5	-	-	-	Ω

[1] Typical values are measured at T_{amb} = 25 °C and nominal V_{CC}.

[2] Flatness is defined as the difference between the maximum and minimum value of ON resistance measured at identical V_{CC} and temperature.

10.3 ON resistance test circuit and graphs

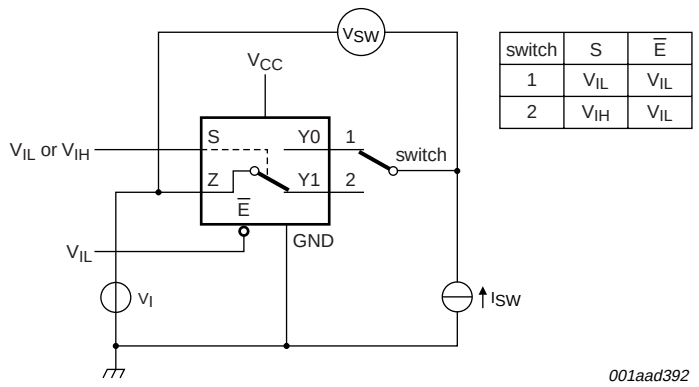

switch	S	$\overline{E}$
1	V_{IL}	V_{IL}
2	V_{IH}	V_{IL}

$R_{ON} = V_{SW} / I_{SW}$.

Fig 9. Test circuit for measuring ON resistance

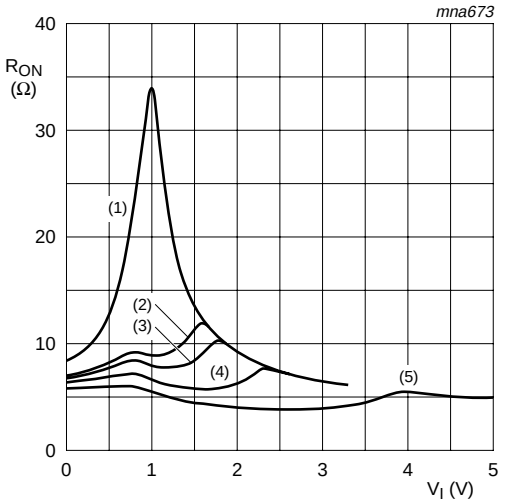

(1) V_{CC} = 1.8 V.

(2) V_{CC} = 2.5 V.

(3) V_{CC} = 2.7 V.

(4) V_{CC} = 3.3 V.

(5) V_{CC} = 5.0 V.

Fig 10. Typical ON resistance as a function of input voltage; T_{amb} = 25 °C

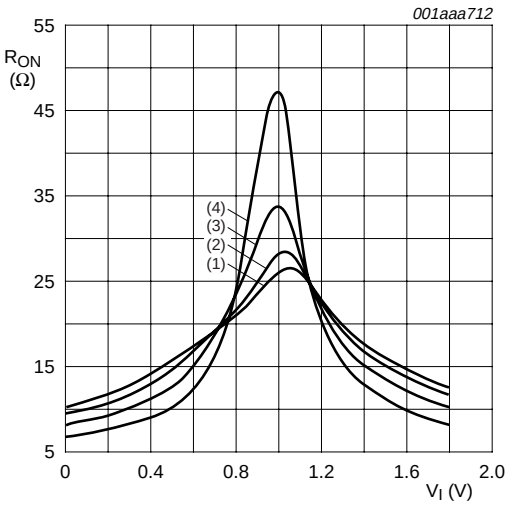

(1) T_{amb} = 125 °C.

(2) T_{amb} = 85 °C.

(3) T_{amb} = 25 °C.

(4) T_{amb} = −40 °C.

Fig 11. ON resistance as a function of input voltage; V_{CC} = 1.8 V

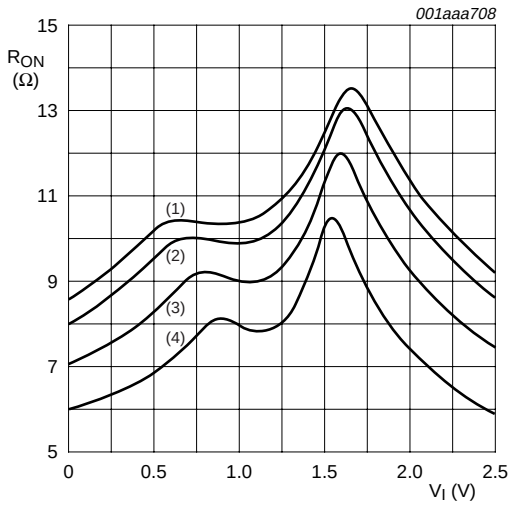

(1) T_{amb} = 125 °C.

(2) T_{amb} = 85 °C.

(3) T_{amb} = 25 °C.

(4) T_{amb} = −40 °C.

Fig 12. ON resistance as a function of input voltage; V_{CC} = 2.5 V

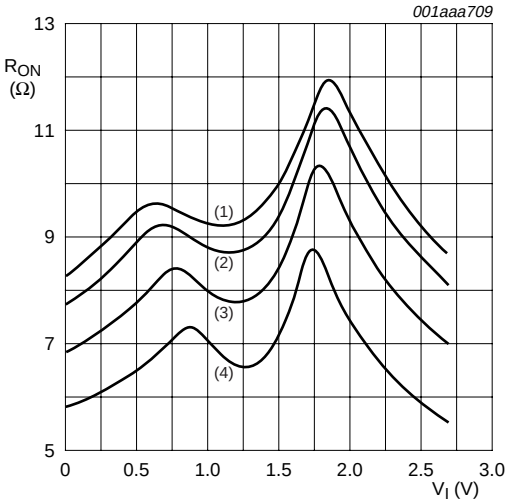

(1) T_{amb} = 125 °C.

(2) T_{amb} = 85 °C.

(3) T_{amb} = 25 °C.

(4) T_{amb} = –40 °C.

Fig 13. ON resistance as a function of input voltage; V_{CC} = 2.7 V

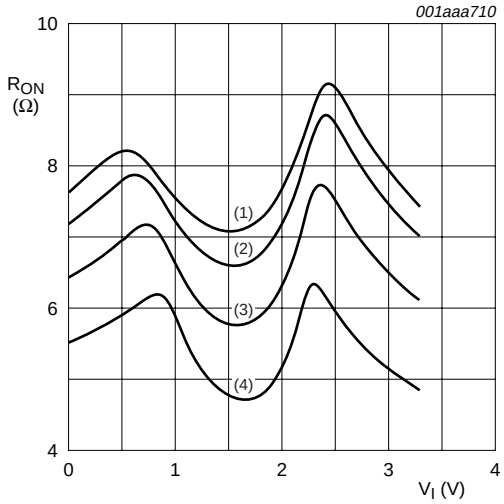

(1) T_{amb} = 125 °C.

(2) T_{amb} = 85 °C.

(3) T_{amb} = 25 °C.

(4) T_{amb} = –40 °C.

Fig 14. ON resistance as a function of input voltage; V_{CC} = 3.3 V

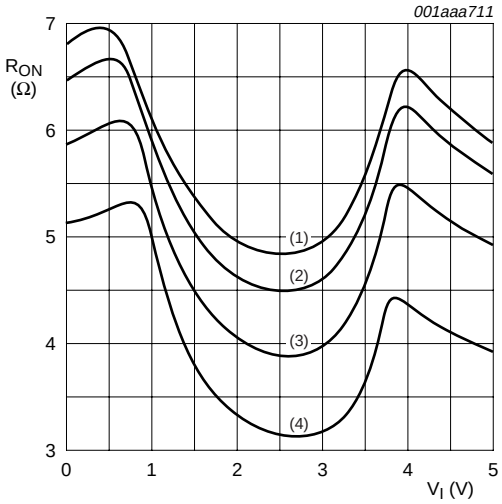

(1) T_{amb} = 125 °C.

(2) T_{amb} = 85 °C.

(3) T_{amb} = 25 °C.

(4) T_{amb} = –40 °C.

Fig 15. ON resistance as a function of input voltage; V_{CC} = 5.0 V

11. Dynamic characteristics

Table 9. Dynamic characteristics

At recommended operating conditions; voltages are referenced to GND (ground = 0 V); for load circuit see Figure 18.

Symbol	Parameter	Conditions		−40 °C to +85 °C			−40 °C to +125 °C		Unit
				Min	Typ[1]	Max	Min	Max	
t_{pd}	propagation delay	Z to Yn or Yn to Z; see Figure 16	[2][3]						
		V_{CC} = 1.65 V to 1.95 V		-	-	2	-	2.5	ns
		V_{CC} = 2.3 V to 2.7 V		-	-	1.2	-	1.5	ns
		V_{CC} = 2.7 V		-	-	1.0	-	1.25	ns
		V_{CC} = 3.0 V to 3.6 V		-	-	0.8	-	1.0	ns
		V_{CC} = 4.5 V to 5.5 V		-	-	0.6	-	0.8	ns
t_{en}	enable time	S to Z or Yn; see Figure 17	[4]						
		V_{CC} = 1.65 V to 1.95 V		2.6	6.7	10.3	2.6	12.9	ns
		V_{CC} = 2.3 V to 2.7 V		1.9	4.1	6.4	1.9	8.0	ns
		V_{CC} = 2.7 V		1.9	4.0	5.5	1.8	7.0	ns
		V_{CC} = 3.0 V to 3.6 V		1.8	3.4	5.0	1.8	6.3	ns
		V_{CC} = 4.5 V to 5.5 V		1.3	2.6	3.8	1.3	4.8	ns
		$\overline{E}$ to Z or Yn; see Figure 17	[4]						
		V_{CC} = 1.65 V to 1.95 V		1.9	4.0	7.3	1.9	9.2	ns
		V_{CC} = 2.3 V to 2.7 V		1.4	2.5	4.4	1.4	5.5	ns
		V_{CC} = 2.7 V		1.1	2.6	3.9	1.1	4.9	ns
		V_{CC} = 3.0 V to 3.6 V		1.2	2.2	3.8	1.2	4.8	ns
		V_{CC} = 4.5 V to 5.5 V		1.0	1.7	2.6	1.0	3.3	ns
t_{dis}	disable time	S to Z or Yn; see Figure 17	[5]						
		V_{CC} = 1.65 V to 1.95 V		2.1	6.8	10.0	2.1	12.5	ns
		V_{CC} = 2.3 V to 2.7 V		1.4	3.7	6.1	1.4	7.7	ns
		V_{CC} = 2.7 V		1.4	4.9	6.2	1.4	7.8	ns
		V_{CC} = 3.0 V to 3.6 V		1.1	4.0	5.4	1.1	6.8	ns
		V_{CC} = 4.5 V to 5.5 V		1.0	2.9	3.8	1.0	4.8	ns
		$\overline{E}$ to Z or Yn; see Figure 17	[5]						
		V_{CC} = 1.65 V to 1.95 V		2.3	5.6	8.6	2.3	11.0	ns
		V_{CC} = 2.3 V to 2.7 V		1.2	3.2	4.8	1.2	6.0	ns
		V_{CC} = 2.7 V		1.4	4.0	5.2	1.4	6.5	ns
		V_{CC} = 3.0 V to 3.6 V		2.0	3.7	5.0	2.0	6.3	ns
		V_{CC} = 4.5 V to 5.5 V		1.3	2.9	3.8	1.3	4.8	ns

[1] Typical values are measured at T_{amb} = 25 °C and nominal V_{CC}.

[2] t_{pd} is the same as t_{PLH} and t_{PHL}.

[3] Propagation delay is the calculated RC time constant of the typical ON resistance of the switch and the specified capacitance when driven by an ideal voltage source (zero output impedance).

[4] t_{en} is the same as t_{PZH} and t_{PZL}.

[5] t_{dis} is the same as t_{PLZ} and t_{PHZ}.

11.1 Waveforms and test circuits

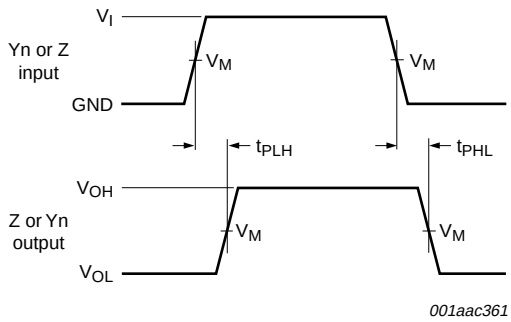

Measurement points are given in Table 10.

Logic levels: V_{OL} and V_{OH} are typical output voltage levels that occur with the output load.

Fig 16. Input (Yn or Z) to output (Z or Yn) propagation delays

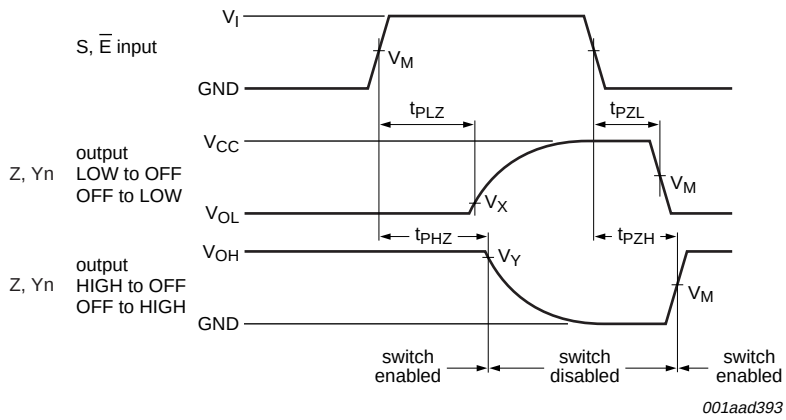

Measurement points are given in Table 10.

Logic levels: V_{OL} and V_{OH} are typical output voltage levels that occur with the output load.

Fig 17. Enable and disable times

Table 10. Measurement points

Supply voltage	Input	Output		
V_{CC}	V_M	V_M	V_X	V_Y
1.65 V to 2.7 V	$0.5V_{CC}$	$0.5V_{CC}$	V_{OL} + 0.15 V	V_{OH} – 0.15 V
2.7 V to 5.5 V	$0.5V_{CC}$	$0.5V_{CC}$	V_{OL} + 0.3 V	V_{OH} – 0.3 V

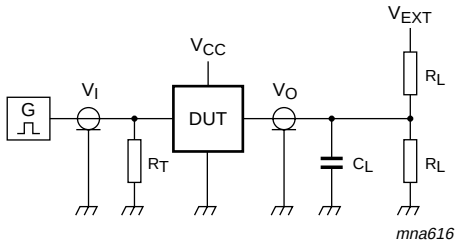

Test data is given in Table 11.

Definitions test circuit:

R_T = Termination resistance (should be equal to output impedance Z_o of the pulse generator).

C_L = Load capacitance (including jig and probe capacitance).

R_L = Load resistance.

V_{EXT} = External voltage for measuring switching times.

Fig 18. Load circuit for switching times

Table 11. Test data

Supply voltage	Input		Load		V_{EXT}		
V_{CC}	V_I	t_r, t_f	C_L	R_L	t_{PLH}, t_{PHL}	t_{PZH}, t_{PHZ}	t_{PZL}, t_{PLZ}
1.65 V to 1.95 V	V_{CC}	≤ 2.0 ns	30 pF	1 kΩ	open	GND	$2V_{CC}$
2.3 V to 2.7 V	V_{CC}	≤ 2.0 ns	30 pF	500 Ω	open	GND	$2V_{CC}$
2.7 V	V_{CC}	≤ 2.5 ns	50 pF	500 Ω	open	GND	$2V_{CC}$
3 V to 3.6 V	V_{CC}	≤ 2.5 ns	50 pF	500 Ω	open	GND	$2V_{CC}$
4.5 V to 5.5 V	V_{CC}	≤ 2.5 ns	50 pF	500 Ω	open	GND	$2V_{CC}$

11.2 Additional dynamic characteristics

Table 12. Additional dynamic characteristics

At recommended operating conditions; voltages are referenced to GND (ground = 0 V); T_{amb} = 25 °C.

Symbol	Parameter	Conditions	Min	Typ	Max	Unit
THD	total harmonic distortion	f_i = 600 Hz to 20 kHz; R_L = 600 Ω; C_L = 50 pF; V_I = 0.5 V (p-p); see Figure 19				
		V_{CC} = 1.65 V	-	0.260	-	%
		V_{CC} = 2.3 V	-	0.078	-	%
		V_{CC} = 3.0 V	-	0.078	-	%
		V_{CC} = 4.5 V	-	0.078	-	%
$f_{(-3dB)}$	–3 dB frequency response	R_L = 50 Ω; C_L = 5 pF; see Figure 20				
		V_{CC} = 1.65 V	-	200	-	MHz
		V_{CC} = 2.3 V	-	300	-	MHz
		V_{CC} = 3.0 V	-	300	-	MHz
		V_{CC} = 4.5 V	-	300	-	MHz

Table 12. Additional dynamic characteristics *...continued*

At recommended operating conditions; voltages are referenced to GND (ground = 0 V); T_{amb} = 25 °C.

Symbol	Parameter	Conditions	Min	Typ	Max	Unit
α_{iso}	isolation (OFF-state)	R_L = 50 Ω; C_L = 5 pF; f_i = 10 MHz; see Figure 21				
		V_{CC} = 1.65 V	-	–42	-	dB
		V_{CC} = 2.3 V	-	–42	-	dB
		V_{CC} = 3.0 V	-	–40	-	dB
		V_{CC} = 4.5 V	-	–40	-	dB
Q_{inj}	charge injection	C_L = 0.1 nF; V_{gen} = 0 V; R_{gen} = 0 Ω; f_i = 1 MHz; R_L = 1 MΩ; see Figure 22				
		V_{CC} = 1.8 V	-	3.3	-	pC
		V_{CC} = 2.5 V	-	4.1	-	pC
		V_{CC} = 3.3 V	-	5.0	-	pC
		V_{CC} = 4.5 V	-	6.4	-	pC
		V_{CC} = 5.5 V	-	7.5	-	pC

11.3 Test circuits

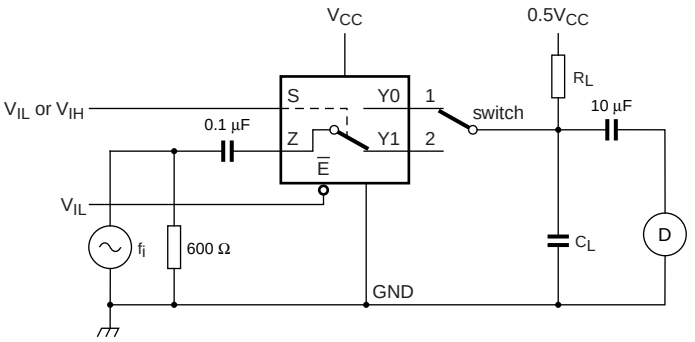

switch	S	$\overline{E}$
1	V_{IL}	V_{IL}
2	V_{IH}	V_{IL}

Fig 19. Test circuit for measuring total harmonic distortion

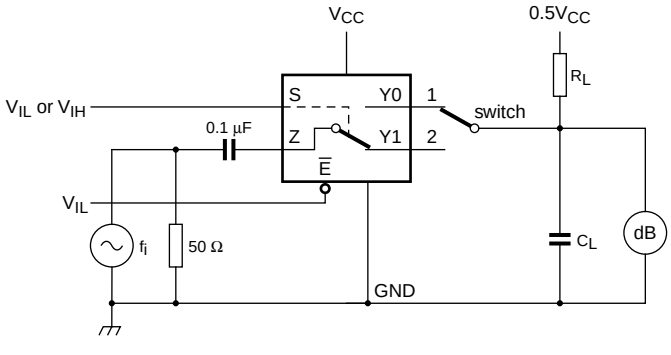

switch	S	$\overline{E}$
1	V_{IL}	V_{IL}
2	V_{IH}	V_{IL}

Adjust f_i voltage to obtain 0 dBm level at output. Increase f_i frequency until dB meter reads –3 dB.

Fig 20. Test circuit for measuring the frequency response when switch is in ON-state

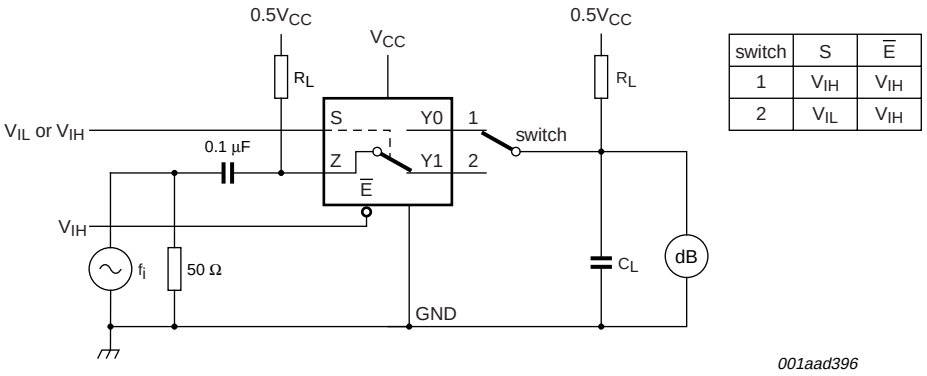

switch	S	$\overline{E}$
1	V_{IH}	V_{IH}
2	V_{IL}	V_{IH}

Adjust f_i voltage to obtain 0 dBm level at input.

Fig 21. Test circuit for measuring isolation (OFF-state)

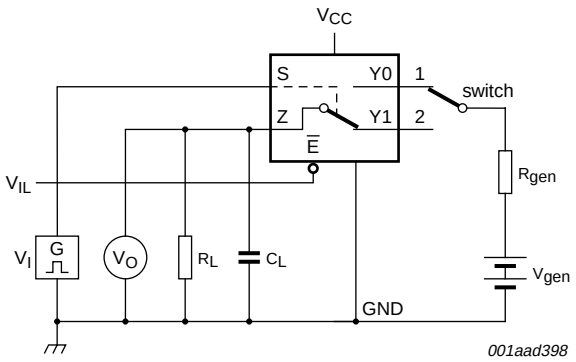

a. Test circuit

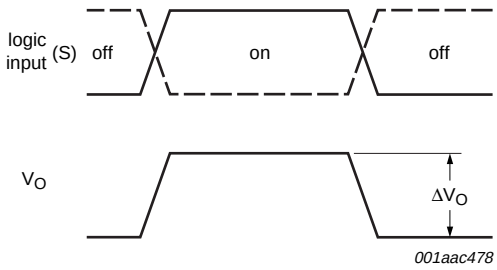

b. Input and output pulse definitions

$Q_{inj} = \Delta V_O \times C_L$.

ΔV_O = output voltage variation.

R_{gen} = generator resistance.

V_{gen} = generator voltage.

Fig 22. Test circuit for measuring charge injection

12. Package outline

TSSOP8: plastic thin shrink small outline package; 8 leads; body width 3 mm; lead length 0.5 mm SOT505-2

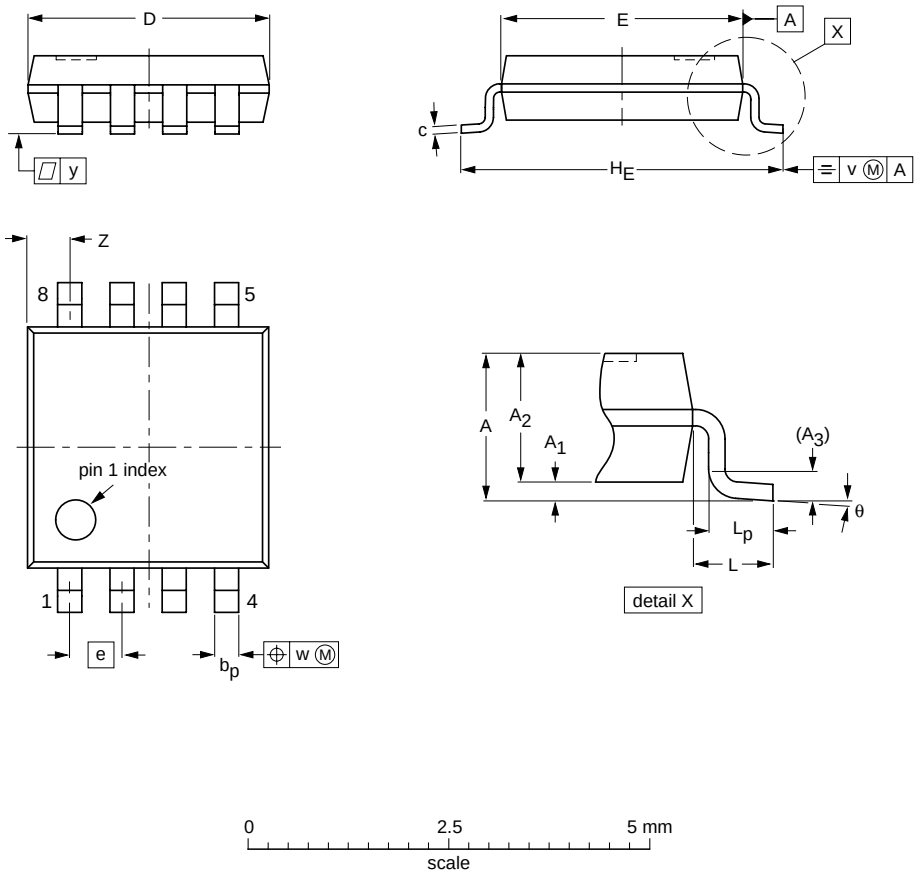

DIMENSIONS (mm are the original dimensions)

UNIT	A max.	A_1	A_2	A_3	b_p	c	$D^{(1)}$	$E^{(1)}$	e	H_E	L	L_p	v	w	y	$Z^{(1)}$	θ
mm	1.1	0.15 0.00	0.95 0.75	0.25	0.38 0.22	0.18 0.08	3.1 2.9	3.1 2.9	0.65	4.1 3.9	0.5	0.47 0.33	0.2	0.13	0.1	0.70 0.35	8° 0°

Note

1. Plastic or metal protrusions of 0.15 mm maximum per side are not included.

OUTLINE VERSION	REFERENCES				EUROPEAN PROJECTION	ISSUE DATE
	IEC	JEDEC	JEITA			
SOT505-2		- - -				02-01-16

Fig 23. Package outline SOT505-2 (TSSOP8)

VSSOP8: plastic very thin shrink small outline package; 8 leads; body width 2.3 mm **SOT765-1**

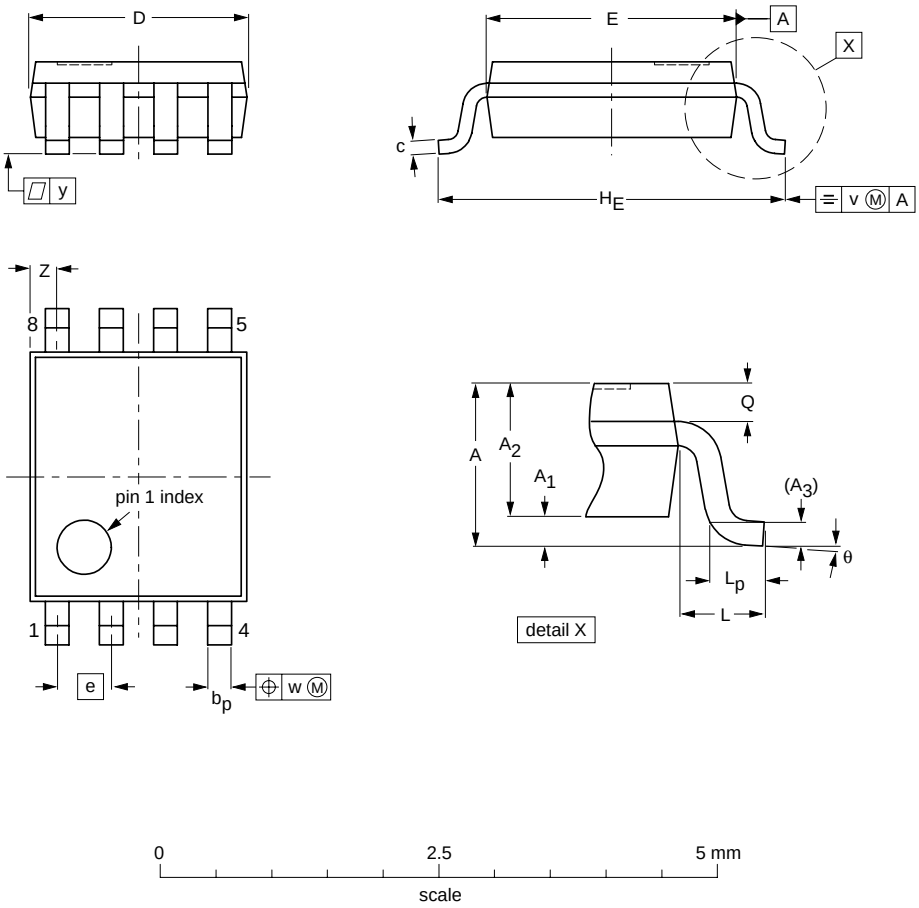

DIMENSIONS (mm are the original dimensions)

UNIT	A max.	A_1	A_2	A_3	b_p	c	D(1)	E(2)	e	H_E	L	L_p	Q	v	w	y	Z(1)	θ
mm	1	0.15 0.00	0.85 0.60	0.12	0.27 0.17	0.23 0.08	2.1 1.9	2.4 2.2	0.5	3.2 3.0	0.4	0.40 0.15	0.21 0.19	0.2	0.13	0.1	0.4 0.1	8° 0°

Notes

1. Plastic or metal protrusions of 0.15 mm maximum per side are not included.
2. Plastic or metal protrusions of 0.25 mm maximum per side are not included.

OUTLINE VERSION	REFERENCES				EUROPEAN PROJECTION	ISSUE DATE
	IEC	JEDEC	JEITA			
SOT765-1		MO-187				02-06-07

Fig 24. Package outline SOT765-1 (VSSOP8)

XSON8: plastic extremely thin small outline package; no leads; 8 terminals; body 1 x 1.95 x 0.5 mm **SOT833-1**

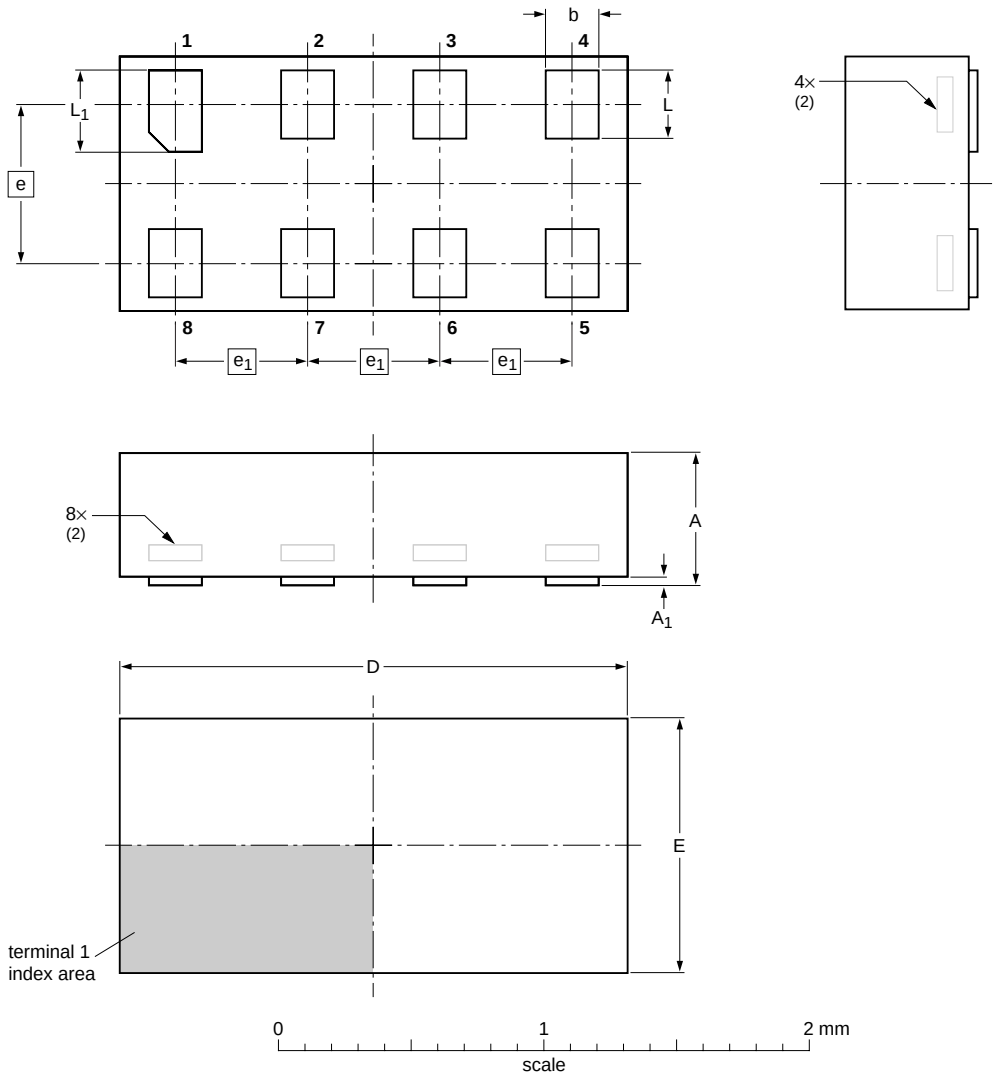

DIMENSIONS (mm are the original dimensions)

UNIT	A(1) max	A_1 max	b	D	E	e	e_1	L	L_1
mm	0.5	0.04	0.25 0.17	2.0 1.9	1.05 0.95	0.6	0.5	0.35 0.27	0.40 0.32

Notes

1. Including plating thickness.
2. Can be visible in some manufacturing processes.

OUTLINE VERSION	REFERENCES				EUROPEAN PROJECTION	ISSUE DATE
	IEC	JEDEC	JEITA			
SOT833-1	- - -	MO-252	- - -			~~07-11-14~~ 07-12-07

Fig 25. Package outline SOT833-1 (XSON8)

XSON8U: plastic extremely thin small outline package; no leads; 8 terminals; UTLP based; body 3 x 2 x 0.5 mm **SOT996-2**

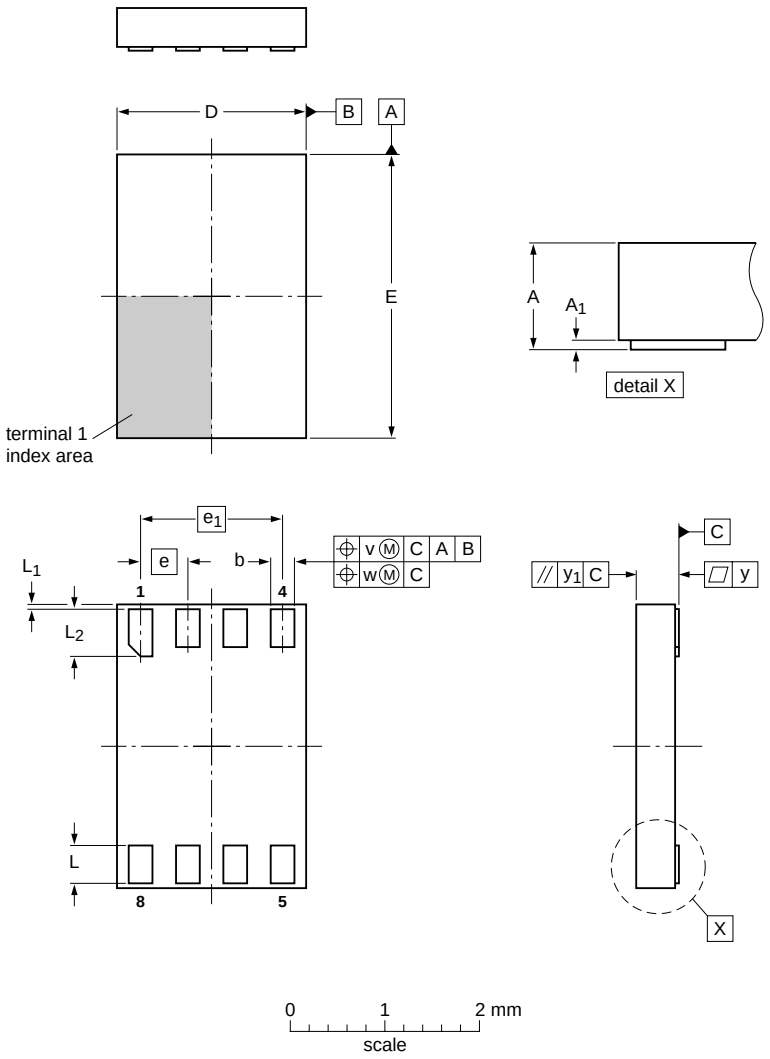

DIMENSIONS (mm are the original dimensions)

UNIT	A max	A_1	b	D	E	e	e_1	L	L_1	L_2	v	w	y	y_1
mm	0.5	0.05 0.00	0.35 0.15	2.1 1.9	3.1 2.9	0.5	1.5	0.5 0.3	0.15 0.05	0.6 0.4	0.1	0.05	0.05	0.1

OUTLINE VERSION	REFERENCES				EUROPEAN PROJECTION	ISSUE DATE
	IEC	JEDEC	JEITA			
SOT996-2	- - -		- - -			~~07-12-18~~ 07-12-21

Fig 26. Package outline SOT996-2 (XSON8U)

XQFN8U: plastic extremely thin quad flat package; no leads; 8 terminals; UTLP based; body 1.6 x 1.6 x 0.5 mm **SOT902-1**

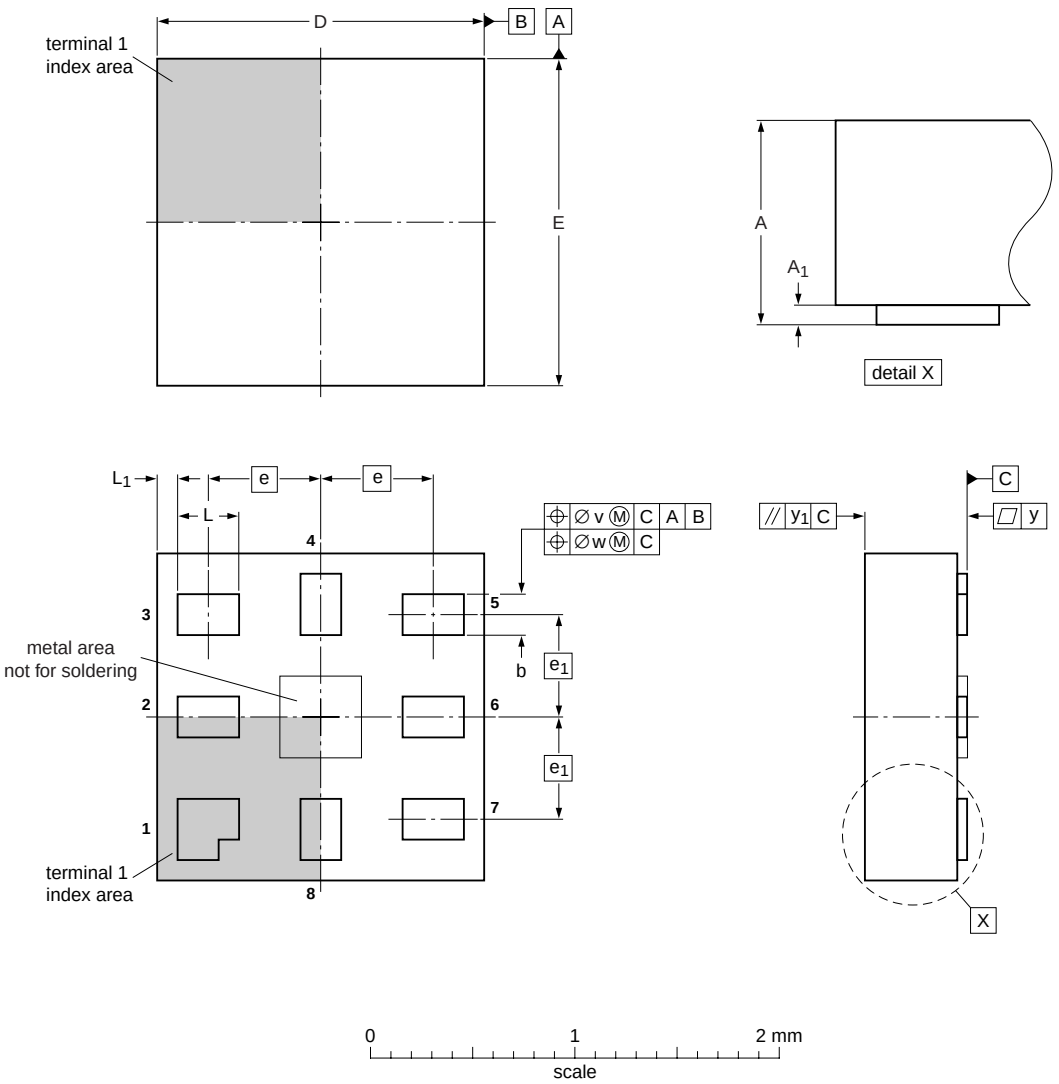

DIMENSIONS (mm are the original dimensions)

UNIT	A max	A_1	b	D	E	e	e_1	L	L_1	v	w	y	y_1
mm	0.5	0.05 0.00	0.25 0.15	1.65 1.55	1.65 1.55	0.55	0.5	0.35 0.25	0.15 0.05	0.1	0.05	0.05	0.05

OUTLINE VERSION	REFERENCES				EUROPEAN PROJECTION	ISSUE DATE
	IEC	JEDEC	JEITA			
SOT902-1	- - -	MO-255	- - -			~~05-11-25~~ 07-11-14

Fig 27. Package outline SOT902-1 (XQFN8U)

13. Abbreviations

Table 13. Abbreviations

Acronym	Description
CMOS	Complementary Metal-Oxide Semiconductor
TTL	Transistor-Transistor Logic
HBM	Human Body Model
ESD	ElectroStatic Discharge
MM	Machine Model
CDM	Charged Device Model
DUT	Device Under Test

14. Revision history

Table 14. Revision history

Document ID	Release date	Data sheet status	Change notice	Supersedes
74LVC1G53_5	20080611	Product data sheet	-	74LVC1G53_4
Modifications:	• Added type number 74LVC1G53GD (XSON8U / SOT996-2 package)			
74LVC1G53_4	20080303	Product data sheet	-	74LVC1G53_3
74LVC1G53_3	20070829	Product data sheet	-	74LVC1G53_2
74LVC1G53_2	20060410	Product data sheet	-	74LVC1G53_1
74LVC1G53_1	20060110	Product data sheet	-	-

15. Legal information

15.1 Data sheet status

Document status[1][2]	Product status[3]	Definition
Objective [short] data sheet	Development	This document contains data from the objective specification for product development.
Preliminary [short] data sheet	Qualification	This document contains data from the preliminary specification.
Product [short] data sheet	Production	This document contains the product specification.

[1] Please consult the most recently issued document before initiating or completing a design.

[2] The term 'short data sheet' is explained in section "Definitions".

[3] The product status of device(s) described in this document may have changed since this document was published and may differ in case of multiple devices. The latest product status information is available on the Internet at URL http://www.nxp.com.

15.2 Definitions

Draft — The document is a draft version only. The content is still under internal review and subject to formal approval, which may result in modifications or additions. NXP Semiconductors does not give any representations or warranties as to the accuracy or completeness of information included herein and shall have no liability for the consequences of use of such information.

Short data sheet — A short data sheet is an extract from a full data sheet with the same product type number(s) and title. A short data sheet is intended for quick reference only and should not be relied upon to contain detailed and full information. For detailed and full information see the relevant full data sheet, which is available on request via the local NXP Semiconductors sales office. In case of any inconsistency or conflict with the short data sheet, the full data sheet shall prevail.

15.3 Disclaimers

General — Information in this document is believed to be accurate and reliable. However, NXP Semiconductors does not give any representations or warranties, expressed or implied, as to the accuracy or completeness of such information and shall have no liability for the consequences of use of such information.

Right to make changes — NXP Semiconductors reserves the right to make changes to information published in this document, including without limitation specifications and product descriptions, at any time and without notice. This document supersedes and replaces all information supplied prior to the publication hereof.

Suitability for use — NXP Semiconductors products are not designed, authorized or warranted to be suitable for use in medical, military, aircraft, space or life support equipment, nor in applications where failure or malfunction of an NXP Semiconductors product can reasonably be expected to result in personal injury, death or severe property or environmental damage. NXP Semiconductors accepts no liability for inclusion and/or use of NXP Semiconductors products in such equipment or applications and therefore such inclusion and/or use is at the customer's own risk.

Applications — Applications that are described herein for any of these products are for illustrative purposes only. NXP Semiconductors makes no representation or warranty that such applications will be suitable for the specified use without further testing or modification.

Limiting values — Stress above one or more limiting values (as defined in the Absolute Maximum Ratings System of IEC 60134) may cause permanent damage to the device. Limiting values are stress ratings only and operation of the device at these or any other conditions above those given in the Characteristics sections of this document is not implied. Exposure to limiting values for extended periods may affect device reliability.

Terms and conditions of sale — NXP Semiconductors products are sold subject to the general terms and conditions of commercial sale, as published at http://www.nxp.com/profile/terms, including those pertaining to warranty, intellectual property rights infringement and limitation of liability, unless explicitly otherwise agreed to in writing by NXP Semiconductors. In case of any inconsistency or conflict between information in this document and such terms and conditions, the latter will prevail.

No offer to sell or license — Nothing in this document may be interpreted or construed as an offer to sell products that is open for acceptance or the grant, conveyance or implication of any license under any copyrights, patents or other industrial or intellectual property rights.

15.4 Trademarks

Notice: All referenced brands, product names, service names and trademarks are the property of their respective owners.

16. Contact information

For more information, please visit: **http://www.nxp.com**

For sales office addresses, please send an email to: **salesaddresses@nxp.com**

17. Contents

For more information, please visit: http://www.nxp.com
For sales office addresses, please send an email to: salesaddresses@nxp.com

Date of release: 11 June 2008
Document identifier: 74LVC1G53_5