DATA SHEET

74LVCU04A
Hex inverter

Product specification
Supersedes data of 2003 Sep 01

2004 Mar 12

Philips
Semiconductors

PHILIPS

FEATURES

- Wide supply voltage range from 1.2 V to 3.6 V
- Inputs accept voltages up to 5.5 V
- CMOS low-power consumption
- Direct interface with TTL levels
- In accordance with JEDEC standard no. 8-1A
- ESD protection:
  HBM EIA/JESD22-A114-A exceeds 2000 V
  MM EIA/JESD22-A115-A exceeds 200 V.
- Specified from –40 °C to +85 °C and –40 °C to +125 °C.

DESCRIPTION

The 74LVCU04A is a high-performance, low-power, low-voltage, Si-gate CMOS device and superior to most advanced CMOS compatible TTL families.

The 74LVCU04A is a general purpose hex inverter. Each of the six inverters is a single stage with unbuffered outputs.

QUICK REFERENCE DATA

GND = 0 V; $t_r = t_f \leq 2.5$ ns; $T_{amb} = 25$ °C.

SYMBOL	PARAMETER	CONDITIONS	TYPICAL	UNIT
t_{PHL}/t_{PLH}	propagation delay nA to nY	$C_L = 50$ pF; $V_{CC} = 3.3$ V	2.1	ns
C_I	input capacitance		5.5	pF
C_{PD}	power dissipation capacitance per gate	notes 1 and 2	8.5	pF

Notes

1. C_{PD} is used to determine the dynamic power dissipation (P_D in μW).
   $P_D = C_{PD} \times V_{CC}^2 \times f_i \times N + \Sigma(C_L \times V_{CC}^2 \times f_o)$ where:
   f_i = input frequency in MHz;
   f_o = output frequency in MHz;
   C_L = output load capacitance in pF;
   V_{CC} = supply voltage in Volts;
   N = total load switching outputs;
   $\Sigma(C_L \times V_{CC}^2 \times f_o)$ = sum of the outputs.
2. The condition is V_I = GND to V_{CC}.

FUNCTION TABLE

See note 1.

INPUT	OUTPUT
nA	**nY**
L	H
H	L

Note

1. H = HIGH voltage level;
   L = LOW voltage level.

ORDERING INFORMATION

TYPE NUMBER	PACKAGE				
	TEMPERATURE RANGE	PINS	PACKAGE	MATERIAL	CODE
74LVCU04AD	–40 °C to +125 °C	14	SO14	plastic	SOT108-1
74LVCU04ADB	–40 °C to +125 °C	14	SSOP14	plastic	SOT337-1
74LVCU04APW	–40 °C to +125 °C	14	TSSOP14	plastic	SOT402-1
74LVCU04ABQ	–40 °C to +125 °C	14	DHVQFN14	plastic	SOT762-1

PINNING

PIN	SYMBOL	DESCRIPTION
1	1A	data input
2	1Y	data output
3	2A	data input
4	2Y	data output
5	3A	data input
6	3Y	data output
7	GND	ground (0 V)
8	4Y	data output
9	4A	data input
10	5Y	data output
11	5A	data input
12	6Y	data output
13	6A	data input
14	V_{CC}	supply voltage

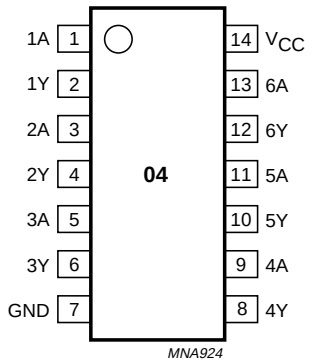

Fig.1 Pin configuration SO14 and (T)SSOP14.

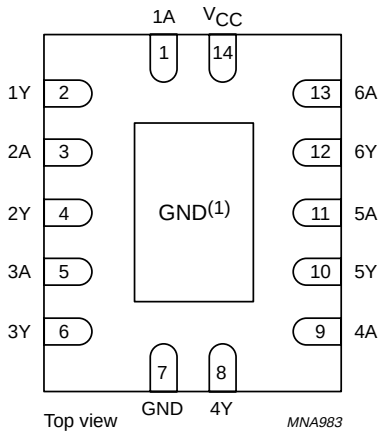

(1) The die substrate is attached to this pad using conductive die attach material. It can not be used as a supply pin or input.

Fig.2 Pin configuration DHVQFN14.

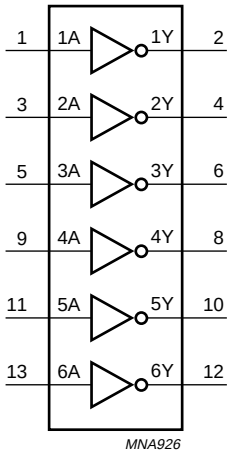

Fig.3 Logic symbol.

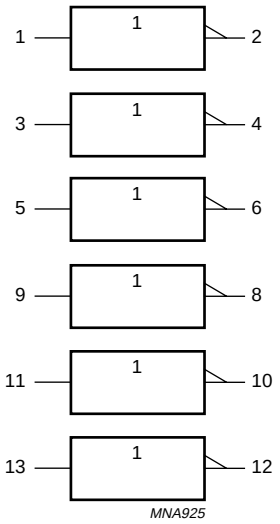

Fig.4 Logic symbol (IEC).

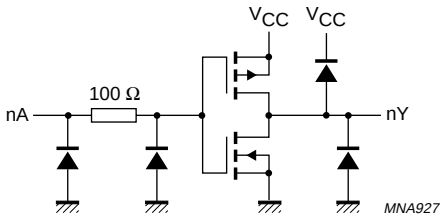

Fig.5 Schematic diagram (one inverter).

RECOMMENDED OPERATING CONDITIONS

SYMBOL	PARAMETER	CONDITIONS	MIN.	MAX.	UNIT
V_{CC}	supply voltage	for maximum speed performance	2.7	3.6	V
		for low-voltage applications	1.2	3.6	V
V_I	input voltage		0	5.5	V
V_O	output voltage		0	V_{CC}	V
T_{amb}	ambient temperature	in free air	–40	+125	°C
t_r, t_f	input rise and fall times	V_{CC} = 1.2 V to 2.7 V	0	20	ns/V
		V_{CC} = 2.7 V to 3.6 V	0	10	ns/V

LIMITING VALUES

In accordance with the Absolute Maximum Rating System (IEC 60134); voltages are referenced to GND (ground = 0 V).

SYMBOL	PARAMETER	CONDITIONS	MIN.	MAX.	UNIT
V_{CC}	supply voltage		–0.5	+6.5	V
I_{IK}	input diode current	V_I < 0 V	–	–50	mA
V_I	input voltage	note 1	–0.5	+6.5	V
I_{OK}	output diode current	V_O > V_{CC} or V_O < 0 V	–	±50	mA
V_O	output voltage	note 1	–0.5	V_{CC} + 0.5	V
I_O	output source or sink current	V_O = 0 V to V_{CC}	–	±50	mA
I_{CC}, I_{GND}	V_{CC} or GND current		–	±100	mA
T_{stg}	storage temperature		–65	+150	°C
P_{tot}	power dissipation	T_{amb} = –40 °C to +125 °C; note 2	–	500	mW

Notes

1. The input and output voltage ratings may be exceeded if the input and output current ratings are observed.
2. For SO14 packages: above 70 °C the value of P_{tot} derates linearly with 8 mW/K.
   For (T)SSOP14 packages: above 60 °C the value of P_{tot} derates linearly with 5.5 mW/K.
   For DHVQFN14 packages: above 60 °C the value of P_{tot} derates linearly with 4.5 mW/K.

DC CHARACTERISTICS

At recommended operating conditions; voltages are referenced to GND (ground = 0 V).

SYMBOL	PARAMETER	TEST CONDITIONS		MIN.	TYP.[1]	MAX.	UNIT
		OTHER	V_{CC} (V)				
T_{amb} = –40 °C to +85 °C							
V_{IH}	HIGH-level input voltage	$V_{OL(max)}$ = 0.5 V; I_O = –100 μA	1.2	V_{CC}	–	–	V
			2.0	1.2	–	–	V
			2.7	1.8	–	–	V
			3.0	2.0	–	–	V
			3.6	2.4	–	–	V
V_{IL}	LOW-level input voltage	$V_{OH(min)}$ = V_{CC} – 0.5 V; I_O = 100 μA	1.2	–	–	GND	V
			2.0	–	–	0.6	V
			2.7	–	–	0.6	V
			3.0	–	–	1.0	V
			3.6	–	–	1.2	V
V_{OH}	HIGH-level output voltage	V_{CC} or GND					
		I_O = –12 mA	2.7	V_{CC} – 0.5	–	–	V
		I_O = –100 μA	3.0	V_{CC} – 0.2	V_{CC}	–	V
		I_O = –12 mA	3.0	V_{CC} – 0.6	–	–	V
		I_O = –24 mA	3.0	V_{CC} – 1.0	–	–	V
V_{OL}	LOW-level output voltage	V_{CC} or GND					
		I_O = 12 mA	2.7	–	–	0.40	V
		I_O = 100 μA	3.0	–	–	0.20	V
		I_O = 24 mA	3.0	–	–	0.55	V
I_{LI}	input leakage current	V_I = 5.5 V or GND	3.6	–	±0.1	±5	μA
I_{CC}	quiescent supply current	V_I = V_{CC} or GND; I_O = 0 A	3.6	–	0.1	10	μA

SYMBOL	PARAMETER	TEST CONDITIONS		MIN.	TYP.(1)	MAX.	UNIT
		OTHER	V_{CC} (V)				
T_{amb} = –40 °C to +125 °C							
V_{IH}	HIGH-level input voltage	$V_{OL(max)}$ = 0.5 V; I_O = –100 μA	1.2	V_{CC}	–	–	V
			2.0	1.6	–	–	V
			2.7	2.2	–	–	V
			3.0	2.4	–	–	V
			3.6	2.8	–	–	V
V_{IL}	LOW-level input voltage	$V_{OH(min)}$ = V_{CC} – 0.5 V; I_O = 100 μA	1.2	–	–	GND	V
			2.0	–	–	0.4	V
			2.7	–	–	0.5	V
			3.0	–	–	0.6	V
			3.6	–	–	0.7	V
V_{OH}	HIGH-level output voltage	V_{CC} or GND					
		I_O = –12 mA	2.7	V_{CC} – 0.65	–	–	V
		I_O = –100 μA	3.0	V_{CC} – 0.3	V_{CC}	–	V
		I_O = –12 mA	3.0	V_{CC} – 0.75	–	–	V
		I_O = –24 mA	3.0	V_{CC} – 1.2	–	–	V
V_{OL}	LOW-level output voltage	V_{CC} or GND					
		I_O = 12 mA	2.7	–	–	0.60	V
		I_O = 100 μA	3.0	–	–	0.30	V
		I_O = 24 mA	3.0	–	–	0.80	V
I_{LI}	input leakage current	V_I = 5.5 V or GND	3.6	–	±0.1	±20	μA
I_{CC}	quiescent supply current	V_I = V_{CC} or GND; I_O = 0 A	3.6	–	0.1	40	μA

Note

1. All typical values are measured at V_{CC} = 3.3 V and T_{amb} = 25 °C.

AC CHARACTERISTICS

GND = 0 V; $t_r = t_f \leq 2.5$ ns; $C_L = 50$ pF; $R_L = 500\ \Omega$.

SYMBOL	PARAMETER	TEST CONDITIONS		MIN.	TYP.	MAX.	UNIT
		WAVEFORMS	V_{CC} (V)				
T_{amb} = −40 °C to +85 °C; note 1							
t_{PHL}/t_{PLH}	propagation delay nA to nY	see Figs 6 and 9	1.2	–	6.0	–	ns
			2.7	0.5	2.4	4.5	ns
			3.0 to 3.6	0.5	2.1[(2)]	4.0	ns
$t_{sk(0)}$	skew	note 3		–	–	1.0	ns
T_{amb} = −40 °C to +125 °C							
t_{PHL}/t_{PLH}	propagation delay nA to nY	see Figs 6 and 9	1.2	–	–	–	ns
			2.7	0.5	–	6.0	ns
			3.0 to 3.6	0.5	–	5.0	ns
$t_{sk(0)}$	skew	note 3	3.0 to 3.6	–	–	1.5	ns

Notes

1. All typical values are measured at T_{amb} = 25 °C.
2. This typical value is measured at V_{CC} = 3.3 V and T_{amb} = 25 °C.
3. Skew between any two outputs of the same package switching in the same direction. This parameter is guaranteed by design.

AC WAVEFORMS

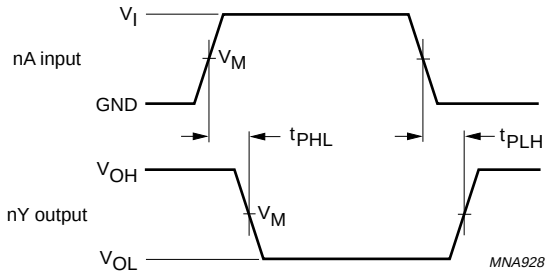

V_M = 1.5 V at $V_{CC} \geq 2.7$ V.
$V_M = 0.5 \times V_{CC}$ at $V_{CC} < 2.7$ V.
V_{OL} and V_{OH} are the typical output voltage drop that occur with the output load.

Fig.6 Input (nA) to output (nY) propagation delays.

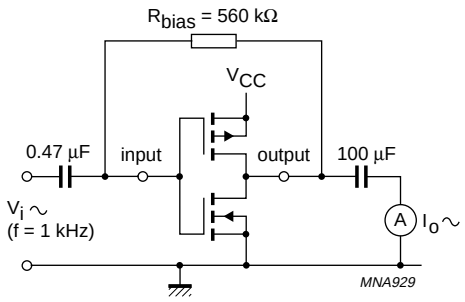

$g_{fs} = \frac{dI_o}{dV_i}$; at constant V_o.

Fig.7 Test set-up for measuring forward transconductance.

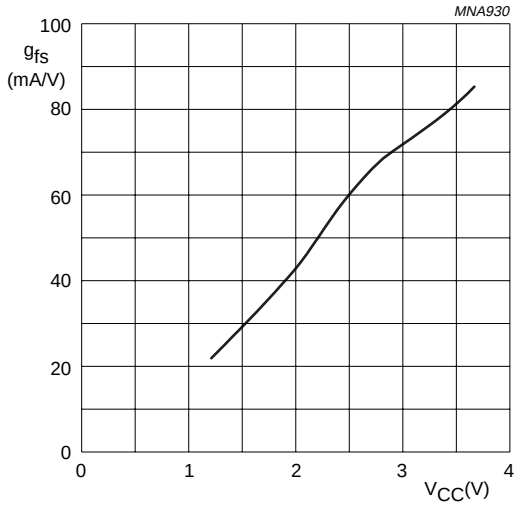

T_{amb} = 25 °C.

Fig.8 Typical forward transconductance as function of supply voltage.

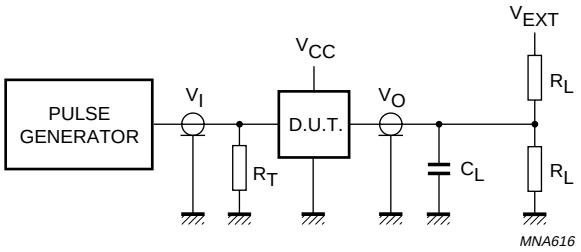

V_{CC}	V_I	C_L	R_L	V_{EXT}		
				t_{PLH}/t_{PHL}	t_{PZH}/t_{PHZ}	t_{PZL}/t_{PLZ}
1.2 V	V_{CC}	50 pF	500 Ω[1]	open	GND	$2 \times V_{CC}$
2.7 V	2.7 V	50 pF	500 Ω	open	GND	$2 \times V_{CC}$
3.0 V to 3.6 V	2.7 V	50 pF	500 Ω	open	GND	$2 \times V_{CC}$

Note

1. The circuit performs better when R_L = 1000 Ω.

Definitions for test circuit:
R_L = Load resistor.
C_L = Load capacitance including jig and probe capacitance.
R_T = Termination resistance should be equal to the output impedance Z_o of the pulse generator.

Fig.9 Load circuitry for switching times.

APPLICATION DIAGRAM

Some applications for the 74LVCU04 are:

- Linear amplifier; see Fig.10
- Crystal oscillator designs; see Fig.11
- Astable multivibrator; see Fig.12.

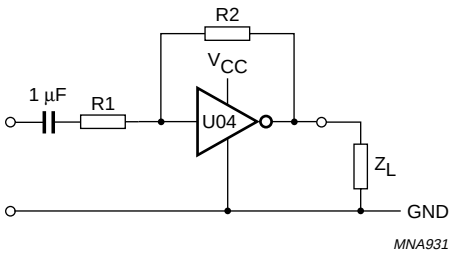

Z_L > 10 kΩ.

R1 ≥ 3 kΩ, R2 ≤ 1 MΩ.

$V_{O(max)(p-p)} \approx V_{CC} - 1.5$ V centred at $0.5 \times V_{CC}$.

Open loop amplification A_{OL} = 20 typical.

Voltage amplification $A_V = -\dfrac{A_{OL}}{1 + \dfrac{R_1}{R_2}(1 + A_{OL})}$

Typical unity gain bandwidth product is 5 MHz.

Fig.10 74LVCU04A used as linear amplifier.

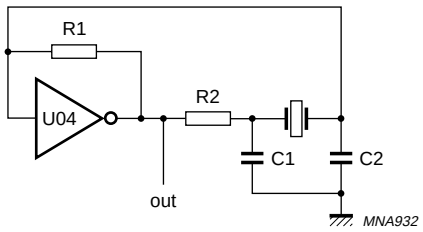

C_1 = 47 pF (typical).

C_2 = 22 pF (typical).

R_1 = 1 to 10 MΩ (typical).

R_2 optimum value depends on the frequency and required stability against changes in V_{CC} or average minimum I_{CC} (I_{CC} is typically 2 mA at V_{CC} = 3 V and f = 1 MHz).

Fig.11 74LVCU04A used as crystal oscillator.

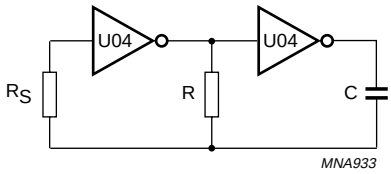

$f = \dfrac{1}{T} \approx \dfrac{1}{2.2RC}$

$R_S \approx 2R$.

The average I_{CC} is approximately 3.5 + 0.05f (MHz) × C (pF) [mA] at V_{CC} = 3.0 V.

Fig.12 74LVCU04A used as astable multivibrator.

PACKAGE OUTLINES

SO14: plastic small outline package; 14 leads; body width 3.9 mm **SOT108-1**

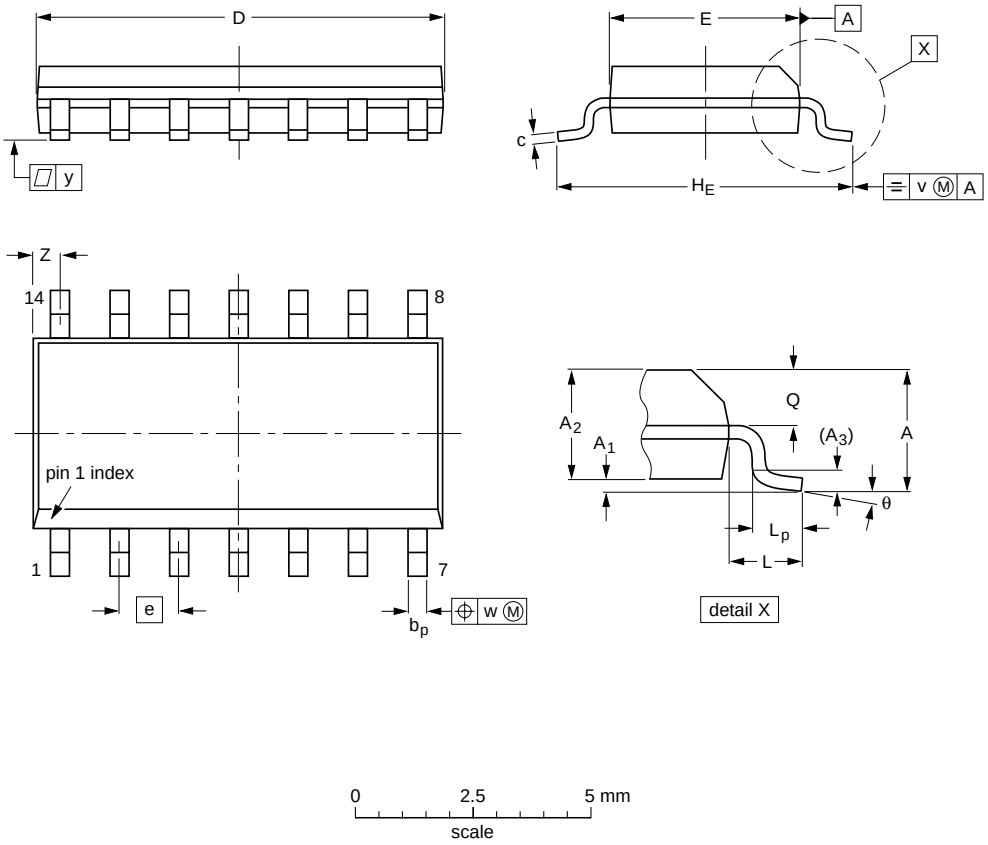

DIMENSIONS (inch dimensions are derived from the original mm dimensions)

UNIT	A max.	A_1	A_2	A_3	b_p	c	D(1)	E(1)	e	H_E	L	L_p	Q	v	w	y	Z(1)	θ
mm	1.75	0.25 0.10	1.45 1.25	0.25	0.49 0.36	0.25 0.19	8.75 8.55	4.0 3.8	1.27	6.2 5.8	1.05	1.0 0.4	0.7 0.6	0.25	0.25	0.1	0.7 0.3	8° 0°
inches	0.069	0.010 0.004	0.057 0.049	0.01	0.019 0.014	0.0100 0.0075	0.35 0.34	0.16 0.15	0.05	0.244 0.228	0.041	0.039 0.016	0.028 0.024	0.01	0.01	0.004	0.028 0.012	

Note

1. Plastic or metal protrusions of 0.15 mm (0.006 inch) maximum per side are not included.

OUTLINE VERSION	REFERENCES				EUROPEAN PROJECTION	ISSUE DATE
	IEC	JEDEC	JEITA			
SOT108-1	076E06	MS-012				~~99-12-27~~ 03-02-19

SSOP14: plastic shrink small outline package; 14 leads; body width 5.3 mm **SOT337-1**

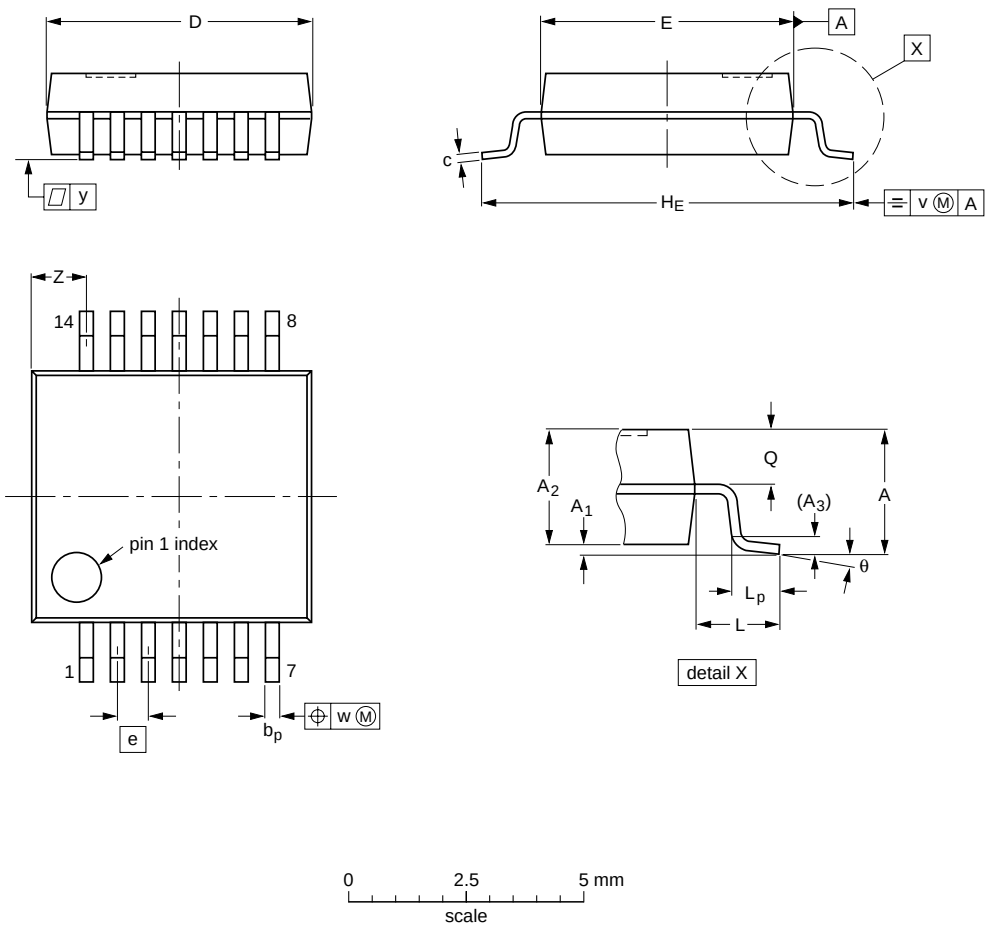

DIMENSIONS (mm are the original dimensions)

UNIT	A max.	A_1	A_2	A_3	b_p	c	D (1)	E (1)	e	H_E	L	L_p	Q	v	w	y	Z (1)	θ
mm	2	0.21 0.05	1.80 1.65	0.25	0.38 0.25	0.20 0.09	6.4 6.0	5.4 5.2	0.65	7.9 7.6	1.25	1.03 0.63	0.9 0.7	0.2	0.13	0.1	1.4 0.9	8° 0°

Note

1. Plastic or metal protrusions of 0.25 mm maximum per side are not included.

OUTLINE VERSION	REFERENCES				EUROPEAN PROJECTION	ISSUE DATE
	IEC	JEDEC	JEITA			
SOT337-1		MO-150				~~99-12-27~~ 03-02-19

TSSOP14: plastic thin shrink small outline package; 14 leads; body width 4.4 mm **SOT402-1**

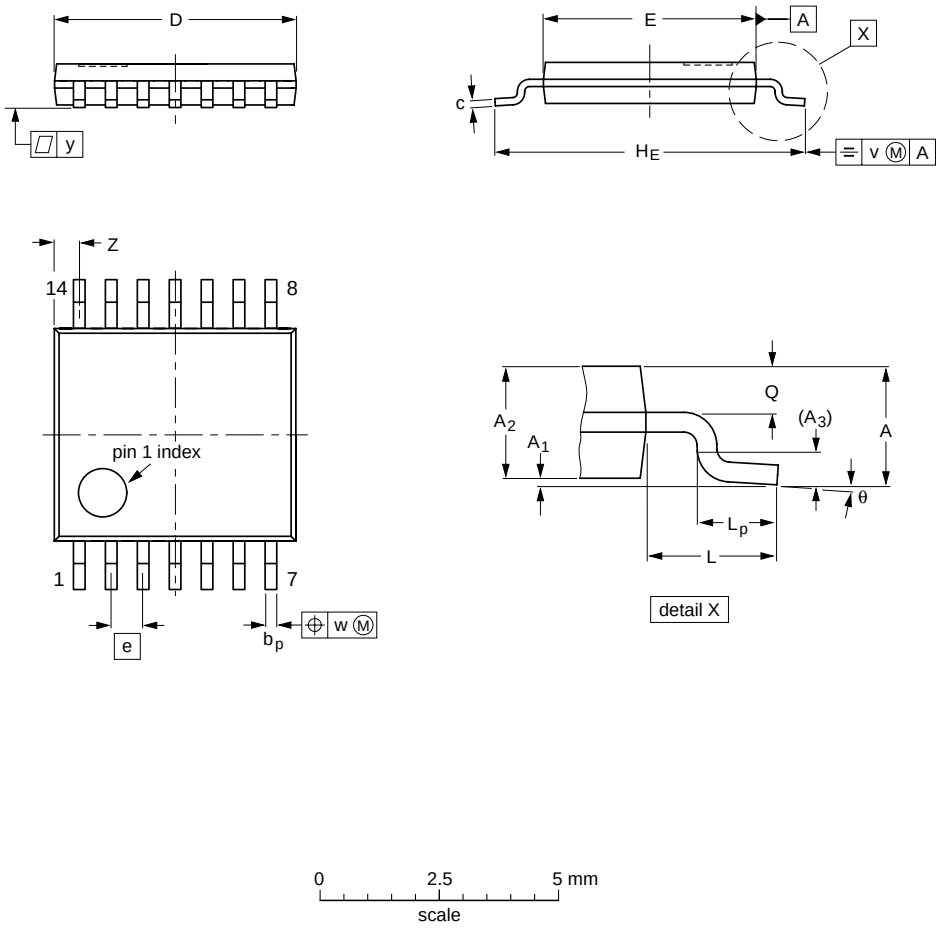

DIMENSIONS (mm are the original dimensions)

UNIT	A max.	A_1	A_2	A_3	b_p	c	D (1)	E (2)	e	H_E	L	L_p	Q	v	w	y	Z (1)	θ
mm	1.1	0.15 0.05	0.95 0.80	0.25	0.30 0.19	0.2 0.1	5.1 4.9	4.5 4.3	0.65	6.6 6.2	1	0.75 0.50	0.4 0.3	0.2	0.13	0.1	0.72 0.38	8° 0°

Notes

1. Plastic or metal protrusions of 0.15 mm maximum per side are not included.
2. Plastic interlead protrusions of 0.25 mm maximum per side are not included.

OUTLINE VERSION	REFERENCES				EUROPEAN PROJECTION	ISSUE DATE
	IEC	JEDEC	JEITA			
SOT402-1		MO-153				~~99-12-27~~ 03-02-18

DHVQFN14: plastic dual in-line compatible thermal enhanced very thin quad flat package; no leads; 14 terminals; body 2.5 x 3 x 0.85 mm **SOT762-1**

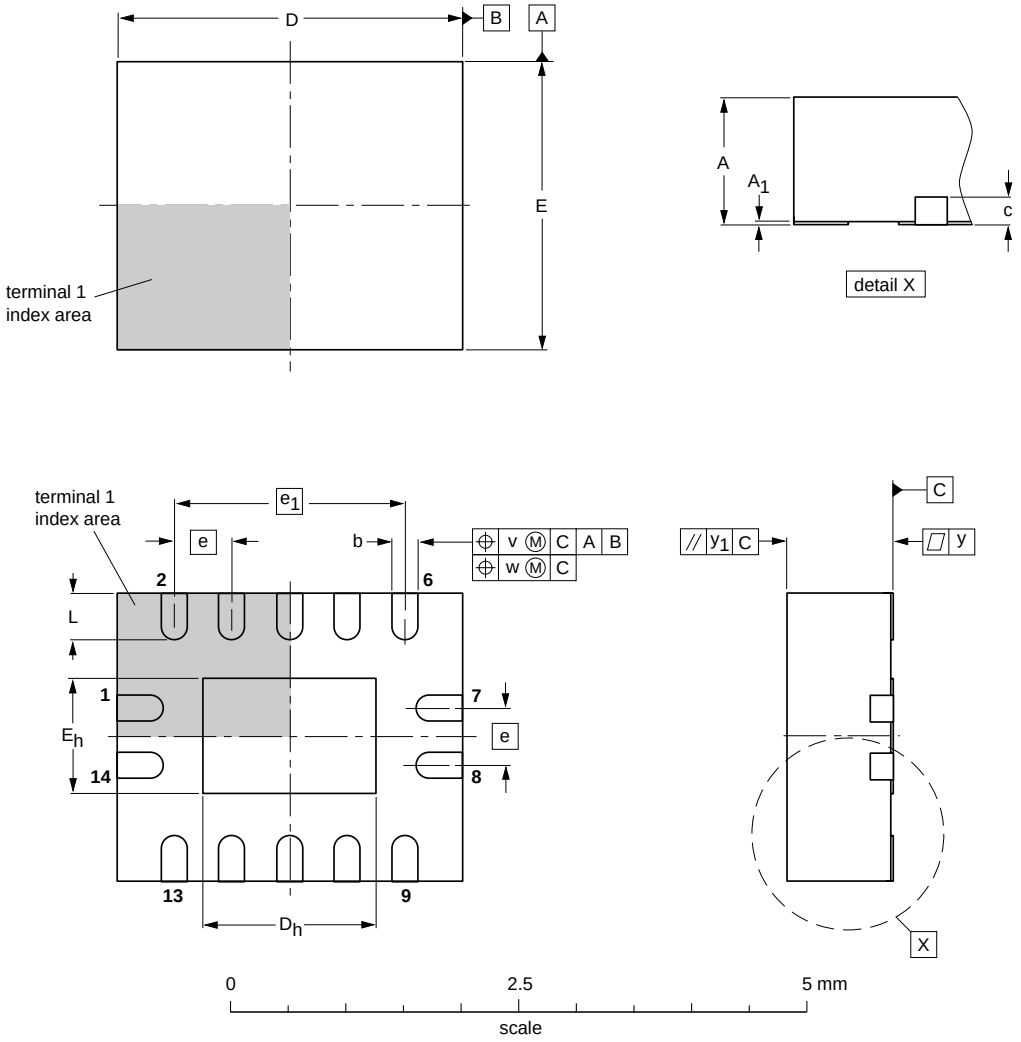

DIMENSIONS (mm are the original dimensions)

UNIT	A(1) max.	A_1	b	c	D(1)	D_h	E(1)	E_h	e	e_1	L	v	w	y	y_1
mm	1	0.05 0.00	0.30 0.18	0.2	3.1 2.9	1.65 1.35	2.6 2.4	1.15 0.85	0.5	2	0.5 0.3	0.1	0.05	0.05	0.1

Note

1. Plastic or metal protrusions of 0.075 mm maximum per side are not included.

OUTLINE VERSION	REFERENCES				EUROPEAN PROJECTION	ISSUE DATE
	IEC	JEDEC	JEITA			
SOT762-1	- - -	MO-241	- - -			~~02-10-17~~ 03-01-27

DATA SHEET STATUS

LEVEL	DATA SHEET STATUS(1)	PRODUCT STATUS(2)(3)	DEFINITION
I	Objective data	Development	This data sheet contains data from the objective specification for product development. Philips Semiconductors reserves the right to change the specification in any manner without notice.
II	Preliminary data	Qualification	This data sheet contains data from the preliminary specification. Supplementary data will be published at a later date. Philips Semiconductors reserves the right to change the specification without notice, in order to improve the design and supply the best possible product.
III	Product data	Production	This data sheet contains data from the product specification. Philips Semiconductors reserves the right to make changes at any time in order to improve the design, manufacturing and supply. Relevant changes will be communicated via a Customer Product/Process Change Notification (CPCN).

Notes

1. Please consult the most recently issued data sheet before initiating or completing a design.
2. The product status of the device(s) described in this data sheet may have changed since this data sheet was published. The latest information is available on the Internet at URL http://www.semiconductors.philips.com.
3. For data sheets describing multiple type numbers, the highest-level product status determines the data sheet status.

DEFINITIONS

Short-form specification — The data in a short-form specification is extracted from a full data sheet with the same type number and title. For detailed information see the relevant data sheet or data handbook.

Limiting values definition — Limiting values given are in accordance with the Absolute Maximum Rating System (IEC 60134). Stress above one or more of the limiting values may cause permanent damage to the device. These are stress ratings only and operation of the device at these or at any other conditions above those given in the Characteristics sections of the specification is not implied. Exposure to limiting values for extended periods may affect device reliability.

Application information — Applications that are described herein for any of these products are for illustrative purposes only. Philips Semiconductors make no representation or warranty that such applications will be suitable for the specified use without further testing or modification.

DISCLAIMERS

Life support applications — These products are not designed for use in life support appliances, devices, or systems where malfunction of these products can reasonably be expected to result in personal injury. Philips Semiconductors customers using or selling these products for use in such applications do so at their own risk and agree to fully indemnify Philips Semiconductors for any damages resulting from such application.

Right to make changes — Philips Semiconductors reserves the right to make changes in the products - including circuits, standard cells, and/or software - described or contained herein in order to improve design and/or performance. When the product is in full production (status ‘Production’), relevant changes will be communicated via a Customer Product/Process Change Notification (CPCN). Philips Semiconductors assumes no responsibility or liability for the use of any of these products, conveys no licence or title under any patent, copyright, or mask work right to these products, and makes no representations or warranties that these products are free from patent, copyright, or mask work right infringement, unless otherwise specified.

Philips Semiconductors – a worldwide company

Contact information

For additional information please visit **http://www.semiconductors.philips.com**. Fax: **+31 40 27 24825**
For sales offices addresses send e-mail to: **sales.addresses@www.semiconductors.philips.com**.

© Koninklijke Philips Electronics N.V. 2004

SCA76

All rights are reserved. Reproduction in whole or in part is prohibited without the prior written consent of the copyright owner.

The information presented in this document does not form part of any quotation or contract, is believed to be accurate and reliable and may be changed without notice. No liability will be accepted by the publisher for any consequence of its use. Publication thereof does not convey nor imply any license under patent- or other industrial or intellectual property rights.

Printed in The Netherlands R20/05/pp17 Date of release: 2004 Mar 12 Document order number: 9397 750 12968

Let's make things better.

Philips
Semiconductors

PHILIPS