DATA SHEET

PCA146x series
32 kHz watch circuits with adaptive motor pulse

Product specification
Supersedes data of 1998 Mar 18
File under Integrated Circuits, IC16

1998 Apr 21

Philips
Semiconductors

PHILIPS

32 kHz watch circuits with adaptive motor pulse

PCA146x series

FEATURES

- 32 kHz oscillator, amplitude regulated with excellent frequency stability
- High immunity of the oscillator to leakage currents
- Time calibration electrically programmable and reprogrammable (via EEPROM)
- A quartz crystal is the only external component required
- Very low current consumption; typically 170 nA
- Output for bipolar stepping motors of different types
- Up to 50% reduction in motor current compared with conventional circuits, by self adaption of the motor pulse width to match the required torque of the motor
- No loss of motor steps possible because of on-chip detection of the induced motor voltage
- Detector for lithium or silver-oxide battery voltage levels
- Indication for battery end-of-life
- Stop function for accurate timing
- Power-on reset for fast testing
- Various test modes for testing the mechanical parts of the watch and the IC.

GENERAL DESCRIPTION

The PCA146x series devices are CMOS integrated circuits specially suited for battery-operated, quartz-crystal-controlled wrist-watches, with a bipolar stepping motor.

ORDERING INFORMATION

TYPE NUMBER	PACKAGE[1]		
	NAME	DESCRIPTION	VERSION
PCA1461U	–	chip in tray	–
PCA1461U/10	–	chip on foil	–
PCA1462U	–	chip in tray	–
PCA1462U/7	–	chip with bumps on tape	–
PCA1462U/10	–	chip on foil	–
PCA1463U	–	chip in tray	–
PCA1463U/10	–	chip on foil	–
PCA1465U/10	–	chip on foil	–
PCA1465U/7	–	chip with bumps on tape	–
PCA1467U/10	–	chip on foil	–

Note

1. Figure 1 and Chapter “Package outline” show details of standard package, available for large orders only. Chapter “Chip dimensions and bonding pad locations” shows exact pad locations for other delivery formats.

PINNING

SYMBOL	PIN	DESCRIPTION
V_{SS}	1	ground (0 V)
TEST	2	test output
OSC IN	3	oscillator input
OSC OUT	4	oscillator output
V_{DD}	5	supply voltage
M1	6	motor 1 output
M2	7	motor 2 output
RESET	8	reset input

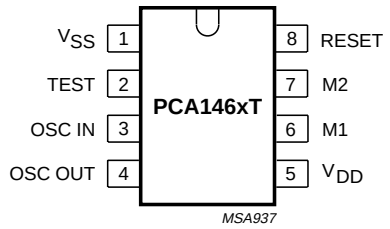

Fig.1 Pin configuration, PCA146xT, (PMFP8).

FUNCTIONAL DESCRIPTION AND TESTING

The motor output delivers pulses of six different stages depending on the torque required to turn the motor (Figs. 3 and 4). Every motor pulse is followed by a detection phase which monitors the waveform of the induced motor voltage. When a step is missed a correction sequence will be started (Fig.2).

Motor pulses

The circuit produces motor pulses of six different stages (stage 1 to 5, stage 8). Each stage has two independent modes: silver-oxide and lithium. The voltage level of V_{DD} determines which mode is selected (see Section “Voltage level detector”).

Stages 1 to 5 (both modes) are used in normal operation, stage 8 occurs under the following conditions:

- Correction pulse after a missing step (both modes)
- End-of-life mode
- If stage 5 is not enough to turn the motor (both modes).

In the silver-oxide mode, the ON state of the motor pulse varies between 56.25% and 100% of the duty factor t_{DF} = 977 µs depending on the stage (Fig.3). It increases in steps of 6.25% per stage.

In the lithium mode, the ON state of the motor pulse is reduced by 18.75% of the duty factor t_{DF} (Fig.4) to compensate for the increase in the voltage level.

After a RESET the circuit always starts and continues with stage 1, when all motor pulses have been executed. A failure to execute all motor pulses results in the circuit going into stage 2, this sequence will be repeated through to stage 8.

When the motor pulses at stage 5 are not large enough to turn the motor, stage 8 is implemented for a maximum of 8 minutes with no attempt to keep current consumption low. After stage 8 has been executed the procedure is repeated from RESET.

The circuit operates for 8 minutes at a fixed stage, if every motor pulse is executed. The next 480 motor pulses are then produced at the next lower stage unless a missing step is detected. If a step is missed a correction sequence is produced and for a maximum of 8 minutes the motor pulses are increased by one stage.

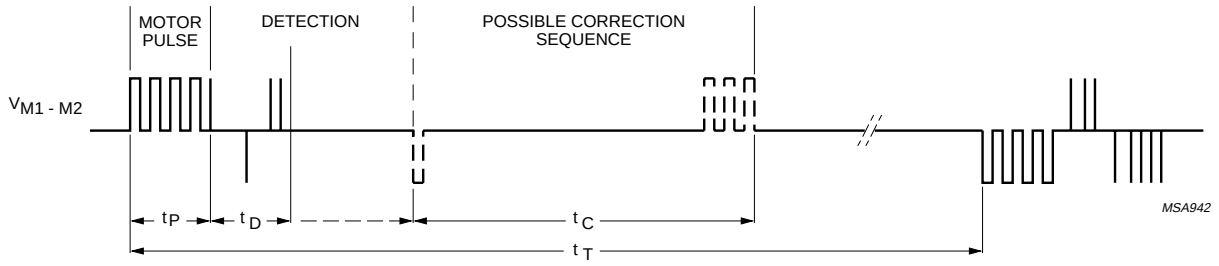

Fig.2 Possible motor output waveform in normal operation with motor connected.

32 kHz watch circuits with adaptive motor pulse

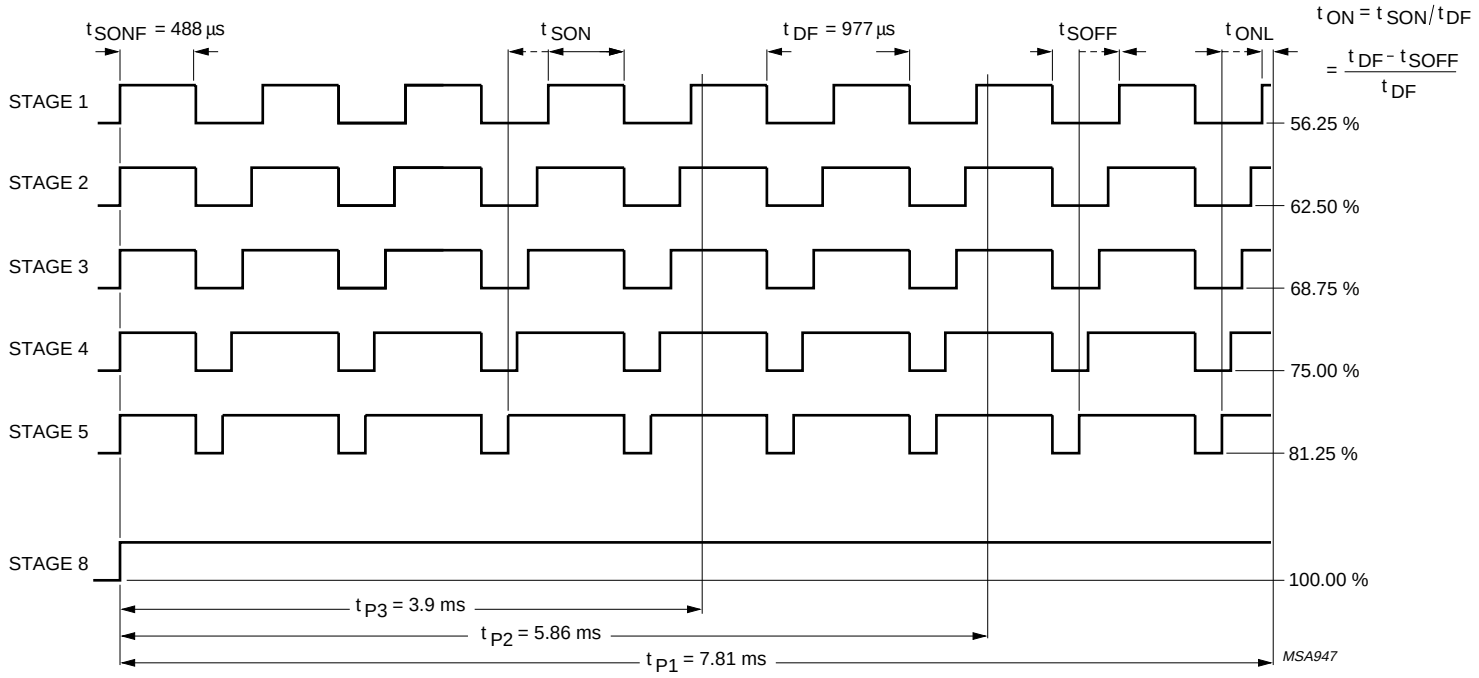

t_{OFF} for stage 1 to 5 = 488 µs – stage × 61 µs
t_{ON} for stage 1 to 5 = 488 µs + stage × 61 µs

Fig.3 Motor pulses in the silver-oxide mode (V_{DD} = 1.55 V).

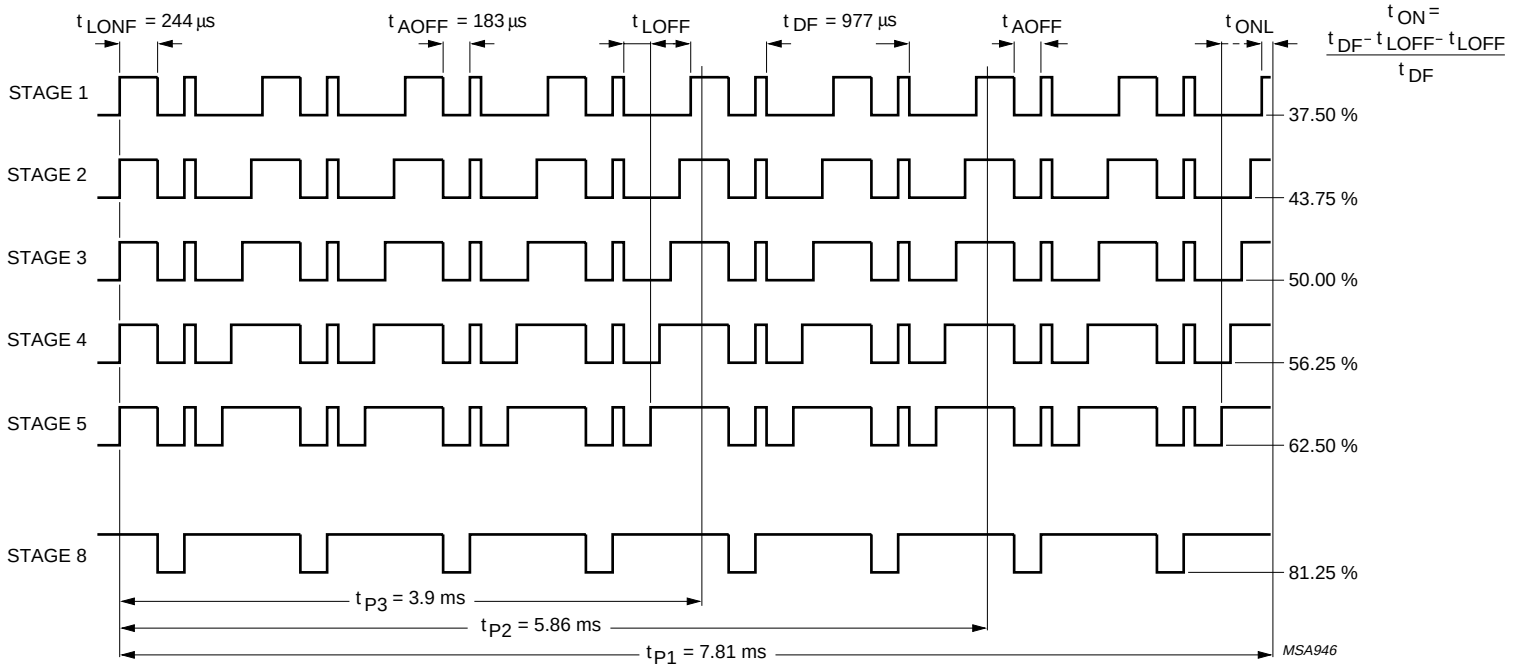

t_{OFF} for stage 1 to 5 = 672 µs − stage × 61 µs
t_{ON} for stage 1 to 5 = 305 µs + stage × 61 µs

Fig.4 Motor pulses in the lithium mode (V_{DD} = 2.1 V).

Voltage level detector

The supply voltage is compared with the internal voltage reference V_{LIT} and V_{EOL} every minute. The first voltage level detection is carried out 30 ms after RESET.

When a lithium voltage level is detected ($V_{DD} \geq V_{LIT}$), the circuit starts operating in the lithium mode (Fig.4).

When the detected V_{DD} voltage level is between V_{LIT} and V_{EOL}, the circuit operates in the silver-oxide mode (Fig.3).

If the battery end-of-life is detected ($V_{DD} < V_{EOL}$), the detection and stage control is switched OFF and the waveform produced is an unchopped version of the stage 8 waveform. To indicate this condition the waveform is produced in bursts of 4 pulses every 4 s.

Detection of motor movement

After a motor pulse, the motor is short-circuited to V_{DD} for 1 ms. Afterwards the energy in the motor inductor will be dissipated to measure only the current generated by the induced motor voltage. During the time t_{DI} (dissipation of energy time) all switches shown in Fig.5 are open to reduce the current as fast as possible. The current will now flow through the diodes D3 and D2, or D4 and D1. Then the first of 52 possible measurement cycles (t_{MC}) starts to measure the induced current.

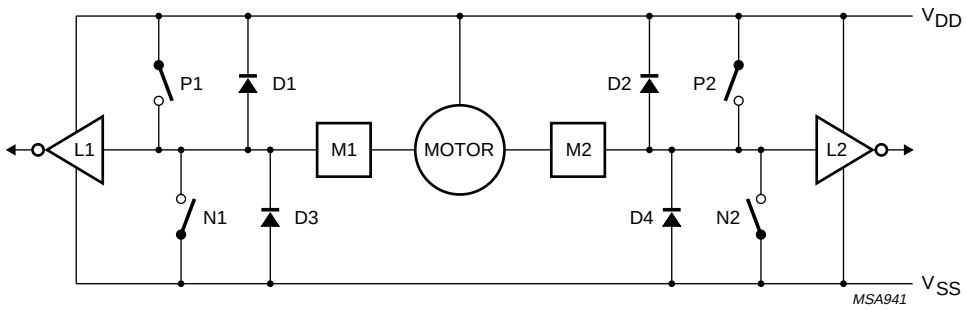

Fig.5 Motor driving and detecting circuit.

Detection criteria

The PCA146x uses current detection in two defined parts of the detection phase to determine if the motor has moved (refer to Figs 6 and 7). The detection criteria are:

part 1

- Minimum value of P = 1; where P = number of measured positive current polarities after t_{DI}.

part 2

- Minimum value of N = 2; where N = number of measured positive current polarities since the first negative current polarity after part 1 was detected (see Fig.6).

If the opposite polarity is measured in one part, the internal counter is reset, so the results of all measurements in this part are ignored.

The waveform of the induced current must enable all these measurements within the time t_D after the end of a positive motor pulse in order to be accepted as a waveform of an executed motor pulse.

If the detection criterion is satisfied earlier, a measurement cycle will not be started and the switches P1 and P2 stay closed, the motor is switched to V_{DD}.

Every measurement cycle (t_{MC}) has 4 phases. These are detailed in Table 1.

Note that detection and pulse width control will be switched OFF when the battery voltage is below the end-of-life voltage (V_{EOL}), or if stage 5 is not sufficient to turn the motor.

Table 1 Measurement cycle

SYMBOL	PHASE	DESCRIPTION
t_{M1}	1	During t_{M1} the switches P1 and P2 are closed in order to switch the motor to V_{DD}, so the induced current flows unaffected through the motor inductance.
t_{M2}	2	Measures the induced current; during a maximum time t_{M2} all switches are open until a change is sensed by one of the level detectors (L1, L2). The motor is short-circuited to V_{DD}. Depending on the direction of the interrupted current: • The current flows through diodes D3 and D2, causing the voltage at M1 to decrease in relation to M2; • The current flows through diodes D4 and D1, causing the voltage at M2 to decrease in relation to M1. A successfully detected current polarity is normally characterized by a short pulse of 0.5 to 10 μs with a voltage up to ±2.1 V, failed polarity detection by the maximum pulse width of 61 μs and a voltage of ±0.5 V (see Fig.7).
t_{M3}	3	The switches P1 and P2 remain closed for the time t_{M3}.
t_{M4}	4	If the circuit detects fewer pulses than P and N respectively, a pulse of the time t_{M4} occurs to reduce the induced current. Therefore P2 and P1 are opened and N1 and N2 are closed. Otherwise P1 and P2 remain closed.

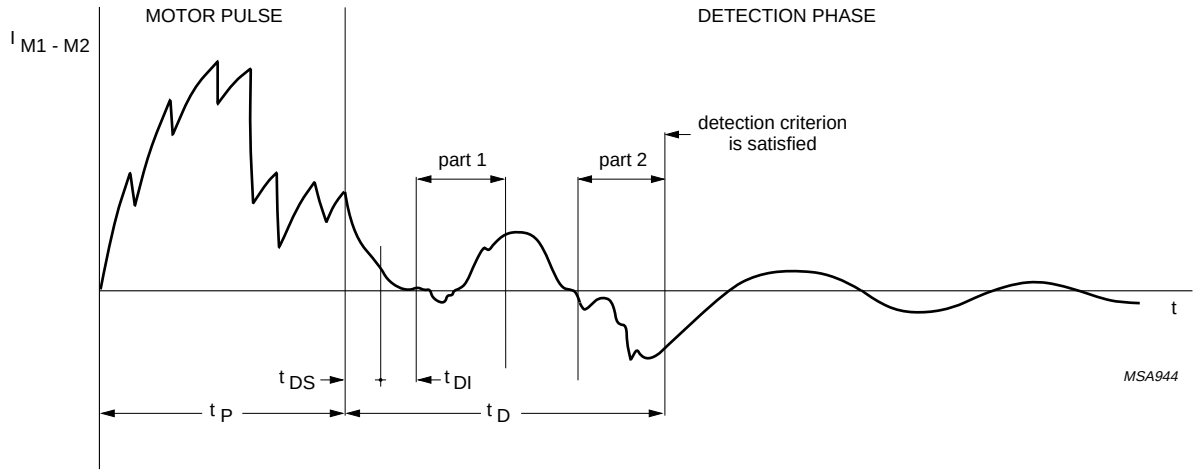

Fig.6 Typical current waveform of a successfully executed motor pulse.

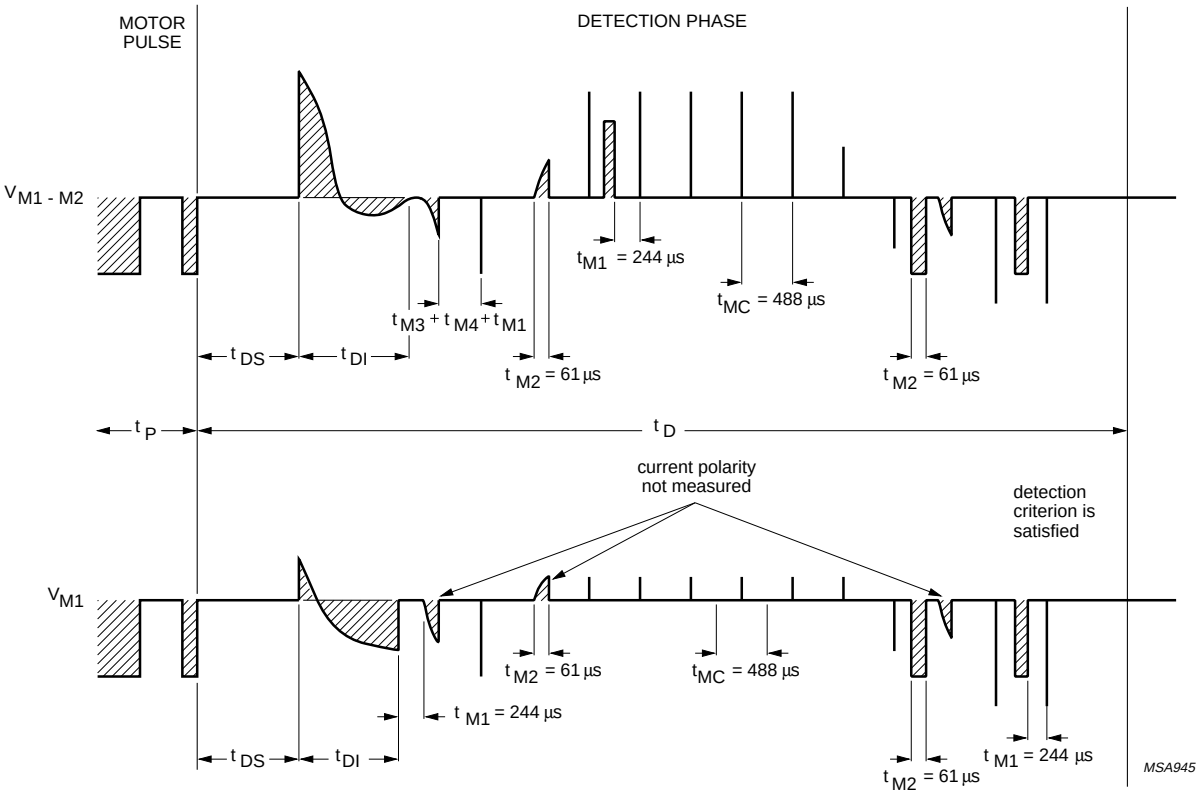

Fig.7 Detection phase of the current waveform in Fig.6.

Correction sequence (see Fig.8)

If a missing step is detected, a correction sequence is produced. This consists of a small pulse (t_{C1}) which gives the motor a defined position and after 29.30 ms a pulse of stage 8 (t_{C2}) to turn the motor.

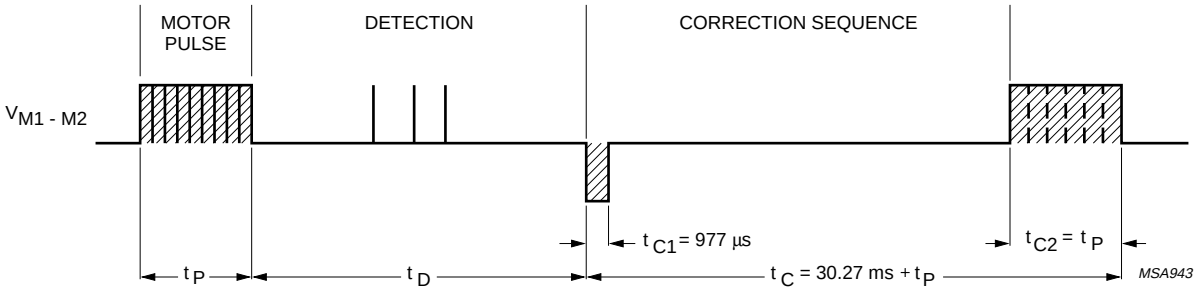

Fig.8 Correction sequence after a missing motor step with motor connected.

Time calibration

Taking a normal quartz crystal with frequency 32768kHz, frequency deviation ($\Delta f/f$) of $\pm 15 \times 10^{-6}$ and C_L = 8.2 pF; the oscillator frequency is offset (by using non-symmetrical internal oscillator input and output capacitances of 10 pF and 15 pF) such that the frequency deviation is positive-only. This positive deviation can then be compensated for to maintain time-keeping accuracy.

Once the positive frequency deviation is measured, a corresponding number 'n' (see Table 2) can be programmed into the device's EEPROM. This causes n pulses of frequency 8192 Hz to be inhibited every minute of operation, which achieves the required calibration.

The programming circuit is shown in Fig.9. The required number n is programmed into EEPROM by varying V_{DD} according to the steps shown in Fig.10, which are explained below:

1. The positive quartz frequency deviation ($\Delta f/f$) is measured, and the corresponding values of n are found according to Table 2.
2. V_{DD} is increased to 5.1 V allowing the contents of the EEPROM to be checked from the motor pulse period t_{T3} at nominal frequency.
3. V_{DD} is decreased to 2.5 V during a motor pulse to initialize a storing sequence.
4. The first V_{DD} pulse to 5.1 V erases the contents of EEPROM.
5. When the EEPROM is erased a logic 1 is at the TEST pin.
6. V_{DD} is increased to 5.1 V to read the data by pulsing V_{DD} n times to 4.5 V. After the n edge, V_{DD} is decreased to 2.5 V.
7. V_{DD} is increased to 5.1 V to store n bits in the EEPROM.
8. V_{DD} is decreased to 2.5 V to terminate the storing sequence and to return to operating mode.
9. V_{DD} is increased to 5.1 V to check writing from the motor pulse period t_{T3}.
10. V_{DD} is decreased to the operation voltage **between** two motor pulses to return to operating mode. (Decreasing V_{DD} during the motor pulse would restart the programming mode).

The time calibration can be reprogrammed up to 100 times.

Table 2 Quartz crystal frequency deviation, n and t_{T3}

FREQUENCY DEVIATION $\Delta f/f$ ($\times 10^{-6}$)	NUMBER OF PULSES (n)	t_{T3} (ms)
0[1]	0	31.250[2]
+2.03	1	31.372
+4.06	2	31.494
. . .	. . .	. . .
+127.89	63	38.936

Notes

1. Increments of 2.03×10^{-6}/step.
2. Increments of 122 μs/step.

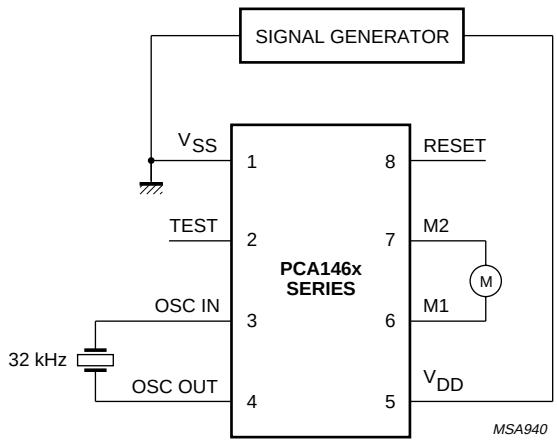

Fig.9 Circuit for programming the time calibration.

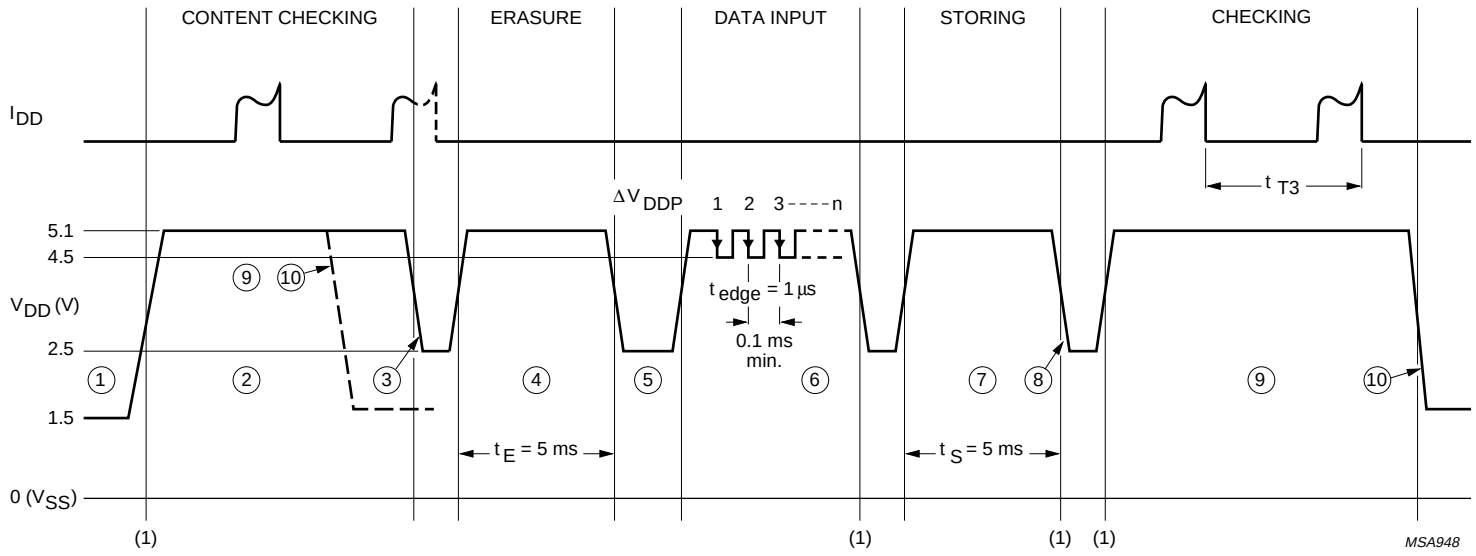

(1) Rise and fall time should be greater than 400 µs/V for immediately correct checking.

Fig.10 V_{DD} for programming.

Power-on reset

For correct operation of the Power-on reset the rise time of V_{DD} from 0 V to 2.1 V should be less than 0.1 ms.
All resetable flip-flops are reset. Additionally the polarity of the first motor pulse is positive: $V_{M1} - V_{M2} \geq 0$ V.

Customer testing

An output frequency of 32 Hz is provided at RESET (pin 8) to be used for exact frequency measurement. Every minute a jitter occurs as a result of the inhibition, which occurs 90 to 150 ms after disconnecting the RESET from V_{DD}.

Connecting the RESET to V_{DD} stops the motor pulses leaving them in a 3-state mode and sets the motor pulse width for the next available motor pulse to stage 1 in the silver-oxide mode. A 32 Hz signal without jitter is produced at the TEST pin.
Debounce time RESET = 14.7 to 123.2 ms.

Connecting RESET to V_{SS} activates Tests 1 and 2 and disables the inhibition.

Test 1, $V_{DD} > V_{EOL}$. Normal function takes place except that the motor pulse period is t_{T1} = 125 ms instead of t_T, and the motor pulse stage is reduced every second instead of every 8 minutes. At TEST a speeded-up 8 minute signal is available.

Test 2, $V_{DD} < V_{EOL}$. Motor pulses of stage 8 are produced, with a time period of t_{T2} = 31.25 ms.

Test and reset modes are terminated by disconnecting the RESET pin.

Test 3, V_{DD} > 5.1 V. Motor pulses of stage 8 are produced, with a time period of t_{T3} = 31.25 ms and $n \times 122$ µs to check the contents of the EEPROM. At TEST a speeded-up cycle for motor pulse period signal t_T is available at 1024 times its normal frequency.
Decreasing V_{DD} voltage level to lower than 2.5 V between two motor pulses returns the circuit to normal operating conditions.

AVAILABLE TYPES

Refer to Chapters “Ordering information” and “Functional description and testing”.

SHORT TYPE NUMBER	DELIVERY FORMAT(1)	PERIOD t_T (s)	SPECIFICATIONS					
			PULSE WIDTH t_P (ms)	DRIVE (%)	DETECTION CRITERION	EEPROM	BATTERY EOL DETECTION	REMARKS
1461	U; U/10	1	7.8	max. 100 81	P = 1 N = 2	yes	yes	1.5 V and 2.1 V Lithium
1462	U; U/7; U/10	1	5.8	max. 100 81	P = 1 N = 2	yes	yes	1.5 V and 2.1 V Lithium
1463	U; U/10	1	3.9	max. 100 81	P = 1 N = 2	yes	yes	1.5 V and 2.1 V Lithium
1465	U/10; U/7	1	5.8	max. 100	P = 1 N = 2	yes	no	1.5 V
1467	U/10	1	7.8	max. 100	P = 1 N = 2	yes	no	1.5 V

Note

1. U = Chip in tray; U/7 = chip with bumps on tape; U/10 = chip on foil.

LIMITING VALUES

In accordance with the Absolute Maximum Rating System (IEC 134).

SYMBOL	PARAMETER	CONDITIONS	MIN.	MAX.	UNIT
V_{DD}	supply voltage	V_{SS} = 0 V; note 1	–1.8	+6	V
V_I	all input voltages		V_{SS}	V_{DD}	V
	output short-circuit duration		indefinite		
T_{amb}	operating ambient temperature		–10	+60	°C
T_{stg}	storage temperature		–30	+100	°C

Note

1. Connecting the battery with reversed polarity does not destroy the circuit, but in this condition a large current flows, which will rapidly discharge the battery.

HANDLING

Inputs and outputs are protected against electrostatic discharges in normal handling. However, to be totally safe, it is advisable to take handling precautions appropriate to handling MOS devices. Advice can be found in *"Data Handbook IC16, General, Handling MOS Devices"*.

CHARACTERISTICS

V_{DD} = 1.55 V; V_{SS} = 0 V; f_{osc} = 32.768 kHz; T_{amb} = 25 °C; crystal: R_S = 20 kΩ; C_1 = 2 to 3 fF; C_L = 8 to 10 pF; C_0 = 1 to 3 pF; unless otherwise specified.

Immunity against parasitic impedance = 20 MΩ between adjacent pins.

SYMBOL	PARAMETER	CONDITIONS	MIN.	TYP.	MAX.	UNIT
Supply						
V_{DD1}	supply voltage	T_{amb} = –10 to +60 °C	1.2	1.55	2.5	V
ΔV_{DD}	supply voltage variation	transient within 1.2 V and 2.5 V	–	–	0.25	V
V_{DD2}	supply voltage	programming	5.0	5.1	5.2	V
ΔV_{DDP}	supply voltage pulse variation	programming	0.55	0.6	0.65	V
I_{DD1}	supply current	between motor pulses	–	170	260	nA
I_{DD2}	supply current	V_{DD} = 2.1 V	–	190	300	nA
I_{DD3}	supply current	stop mode; pin 8 connected to V_{DD}	–	180	280	nA
I_{DD4}	supply current	V_{DD} = 2.1 V	–	220	360	nA
I_{DD5}	supply current	T_{amb} = –10 to +60 °C	–	–	600	nA
Motor output						
V_{sat}	saturation voltage Σ (P + N)	R_M = 2 kΩ; T_{amb} = –10 to +60 °C	–	150	200	mV
$Z_{o(sc)}$	output short-circuit impedance	between motor pulses $I_{transistor}$ < 1 mA	–	200	300	Ω

SYMBOL	PARAMETER	CONDITIONS	MIN.	TYP.	MAX.	UNIT
Oscillator						
$V_{OSC\ ST}$	starting voltage		1.2	–	–	V
g_m	transconductance	$V_{i(p-p)} \leq 50$ mV	6	15	–	µS
t_{osc}	start-up time		–	1	–	s
$\Delta f/f$	frequency stability	$\Delta V_{DD} = 100$ mV	–	0.05×10^{-6}	0.3×10^{-6}	
C_i	input capacitance		8	10	12	pF
C_o	output capacitance		12	15	18	pF
Voltage level detector						
V_{LIT}	threshold voltage		1.62	1.80	1.98	V
V_{EOL}	threshold voltage		1.30	1.38	1.46	V
ΔV_{EOL}	hysteresis of threshold		–	10	–	mV
TC_{EOL}	temperature coefficient		–	–1	–	mV/K
Reset input						
f_o	output frequency		–	32	–	Hz
ΔV_o	output voltage swing	R = 1 MΩ; C = 10 pF	1.4	–	–	V
t_{edge}	edge time	R = 1 MΩ; C = 10 pF	–	1	–	µs
I_{im}	peak input current	note 1	–	320	–	nA
$I_{i(av)}$	average input current		–	10	–	nA

Note

1. Duty factor is 1 : 32 and RESET = V_{DD} or V_{SS}.

TIMING PARAMETERS

SYMBOL	PARAMETER	SECTION	VALUE	OPTION	UNIT
t_T	cycle for motor pulse (note 1)	motor pulse (Figs 2, 3 and 4)	1	5, 10, 12 or 20	s
t_P	motor pulse width		7.81	3.9 or 5.9	ms
t_{DF}	duty factor		977	–	µs
t_{ONL}	last duty factor on		61 to 305	–	µs
t_v	voltage detection cycle	level mode	60	–	s
t_{SON}	duty factor on	silver-oxide mode (Fig.3)	550 to 794	–	µs
t_{SOFF}	duty factor off		427 to 183	–	µs
t_{SONF}	first duty factor on		488	–	µs
t_{AOFF}	additional duty factor off	lithium mode (Fig.4)	183	–	µs
t_{LON}	duty factor on		305 to 611	–	µs
t_{LOFF}	duty factor off		672 to 366	–	µs
t_{LONF}	first duty factor on		244	–	µs
t_E	EOL sequence	end-of-life mode	4	–	s
t_{E1}	motor pulse width		t_P	–	ms
t_{E2}	time between pulses		31.25	–	ms
t_D	detection sequence	detection (Fig.7)	4.3 to 28.3	–	ms
t_{DS}	short-circuited motor		977	–	µs
t_{DI}	dissipation of energy		977	–	µs
t_{MC}	measurement cycle		488	–	µs
t_{M1}	phase 1		244	–	µs
t_{M2}	phase 2 (measure window)		61	–	µs
t_{M3}	phase 3		122	–	µs
t_{M4}	phase 4		61	–	µs
P	positive current polarities		1	P < N	
N	negative current polarities		2	2 to 6	
t_C	correction sequence	correction sequence (Fig.8)	t_P + 30.27	–	ms
t_{C1}	small pulse width		977	–	µs
t_{C2}	large pulse width		t_P	–	ms
	cycles for motor-pulses in:	testing			
t_{T1}	test 1		125	–	ms
t_{T2}	test 2		31.25	–	ms
t_{T3}	test 3	Fig.10	31.25 to 39	–	ms
t_{DEB}	debounce time for RESET = V_{DD}		14.7 to 123.2	–	ms

Note

1. No option available when EOL indication is required.

CHIP DIMENSIONS AND BONDING PAD LOCATIONS

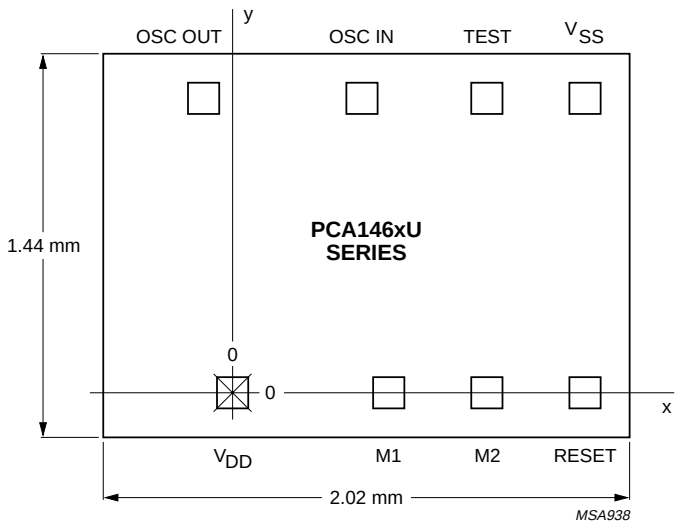

Chip area: 2.91 mm^2.
Bonding pad dimensions: 110 µm × 110 µm.
Chip thickness: 200 ±25 µm, with bumps: 270 ±25 µm.

Fig.11 Bonding pad locations, PCA146xU series; 8 terminals.

Table 3 Bonding pad locations (dimensions in µm)
All x/y coordinates are referenced to bottom left pad (V_{DD}), see Fig.11.

PAD	x	y
V_{SS}	1290	1100
TEST	940	1100
OSC IN	481	1100
OSC OUT	–102	1100
V_{DD}	0	0
M1	578	0
M2	930	0
RESET	1290	0
chip corner (max. value)	–497.5	–170

APPLICATION INFORMATION

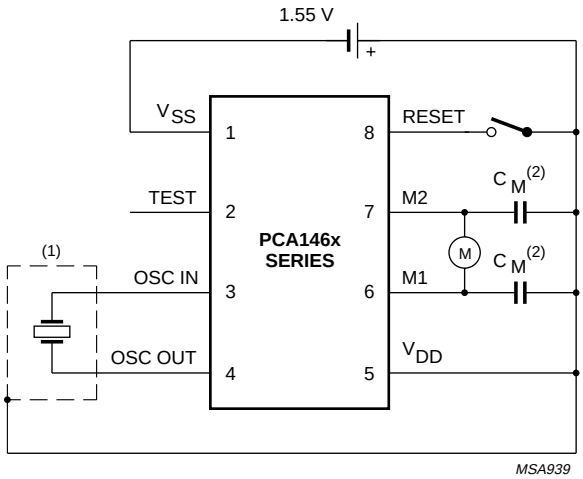

(1) Quartz crystal case should be connected to V_{DD}. Stray capacitance and leakage resistance from RESET, M1 or M2 to OSC IN should be less than 0.5 pF or larger than 20 MΩ.

(2) Motor, probe and stray capacitance from M2 or M1 to V_{DD} or V_{SS} should be less than C_M = 80 pF for correct operation of the detection circuit. Driving the motor at its minimum energy, probe and stray capacitance must be avoided.

Fig.12 Typical application circuit diagram.

PACKAGE OUTLINE

PMFP8: plastic micro flat package; 8 leads (straight) **SOT144-1**

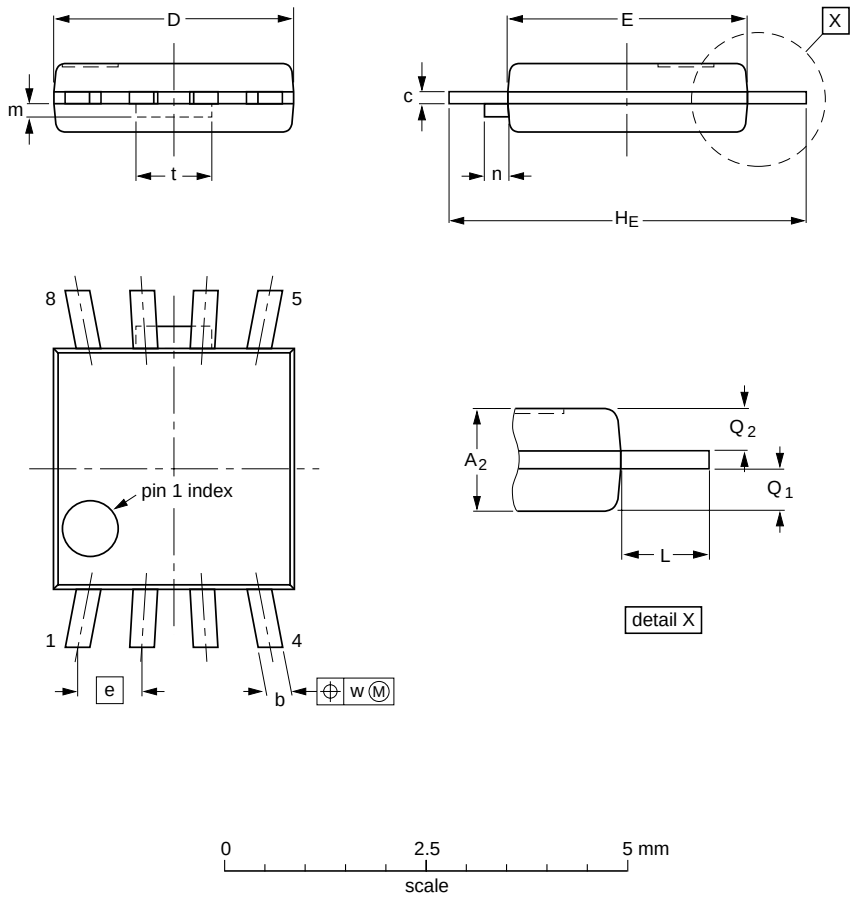

DIMENSIONS (mm are the original dimensions)

UNIT	A_2	b	c	D (1)	E (1)	e	H_E	L	m max.	n max.	Q_1	Q_2	t	w
mm	0.90 0.70	0.40 0.25	0.19 0.12	3.1 2.9	3.1 2.9	0.80	4.6 4.4	0.75	0.26	0.3	0.40 0.30	0.40 0.30	0.95	0.1

Note

1. Plastic or metal protrusions of 0.15 mm maximum per side are not included.

OUTLINE VERSION	REFERENCES				EUROPEAN PROJECTION	ISSUE DATE
	IEC	JEDEC	EIAJ			
SOT144-1						~~94-01-25~~ 95-01-24

SOLDERING

Introduction

There is no soldering method that is ideal for all IC packages. Wave soldering is often preferred when through-hole and surface mounted components are mixed on one printed-circuit board. However, wave soldering is not always suitable for surface mounted ICs, or for printed-circuits with high population densities. In these situations reflow soldering is often used.

This text gives a very brief insight to a complex technology. A more in-depth account of soldering ICs can be found in our *"IC Package Databook"* (order code 9398 652 90011).

Reflow soldering

Reflow soldering techniques are suitable for all SO packages.

Reflow soldering requires solder paste (a suspension of fine solder particles, flux and binding agent) to be applied to the printed-circuit board by screen printing, stencilling or pressure-syringe dispensing before package placement.

Several techniques exist for reflowing; for example, thermal conduction by heated belt. Dwell times vary between 50 and 300 seconds depending on heating method. Typical reflow temperatures range from 215 to 250 °C.

Preheating is necessary to dry the paste and evaporate the binding agent. Preheating duration: 45 minutes at 45 °C.

Wave soldering

Wave soldering techniques can be used for all SO packages if the following conditions are observed:

- A double-wave (a turbulent wave with high upward pressure followed by a smooth laminar wave) soldering technique should be used.
- The longitudinal axis of the package footprint must be parallel to the solder flow.
- The package footprint must incorporate solder thieves at the downstream end.

During placement and before soldering, the package must be fixed with a droplet of adhesive. The adhesive can be applied by screen printing, pin transfer or syringe dispensing. The package can be soldered after the adhesive is cured.

Maximum permissible solder temperature is 260 °C, and maximum duration of package immersion in solder is 10 seconds, if cooled to less than 150 °C within 6 seconds. Typical dwell time is 4 seconds at 250 °C.

A mildly-activated flux will eliminate the need for removal of corrosive residues in most applications.

Repairing soldered joints

Fix the component by first soldering two diagonally-opposite end leads. Use only a low voltage soldering iron (less than 24 V) applied to the flat part of the lead. Contact time must be limited to 10 seconds at up to 300 °C. When using a dedicated tool, all other leads can be soldered in one operation within 2 to 5 seconds between 270 and 320 °C.

DEFINITIONS

Data sheet status	
Objective specification	This data sheet contains target or goal specifications for product development.
Preliminary specification	This data sheet contains preliminary data; supplementary data may be published later.
Product specification	This data sheet contains final product specifications.
Limiting values	
Limiting values given are in accordance with the Absolute Maximum Rating System (IEC 134). Stress above one or more of the limiting values may cause permanent damage to the device. These are stress ratings only and operation of the device at these or at any other conditions above those given in the Characteristics sections of the specification is not implied. Exposure to limiting values for extended periods may affect device reliability.	
Application information	
Where application information is given, it is advisory and does not form part of the specification.	

LIFE SUPPORT APPLICATIONS

These products are not designed for use in life support appliances, devices, or systems where malfunction of these products can reasonably be expected to result in personal injury. Philips customers using or selling these products for use in such applications do so at their own risk and agree to fully indemnify Philips for any damages resulting from such improper use or sale.

NOTES

NOTES

Philips Semiconductors – a worldwide company

Argentina: see South America

Australia: 34 Waterloo Road, NORTH RYDE, NSW 2113, Tel. +61 2 9805 4455, Fax. +61 2 9805 4466

Austria: Computerstr. 6, A-1101 WIEN, P.O. Box 213, Tel. +43 160 1010, Fax. +43 160 101 1210

Belarus: Hotel Minsk Business Center, Bld. 3, r. 1211, Volodarski Str. 6, 220050 MINSK, Tel. +375 172 200 733, Fax. +375 172 200 773

Belgium: see The Netherlands

Brazil: see South America

Bulgaria: Philips Bulgaria Ltd., Energoproject, 15th floor, 51 James Bourchier Blvd., 1407 SOFIA, Tel. +359 2 689 211, Fax. +359 2 689 102

Canada: PHILIPS SEMICONDUCTORS/COMPONENTS, Tel. +1 800 234 7381

China/Hong Kong: 501 Hong Kong Industrial Technology Centre, 72 Tat Chee Avenue, Kowloon Tong, HONG KONG, Tel. +852 2319 7888, Fax. +852 2319 7700

Colombia: see South America

Czech Republic: see Austria

Denmark: Prags Boulevard 80, PB 1919, DK-2300 COPENHAGEN S, Tel. +45 32 88 2636, Fax. +45 31 57 0044

Finland: Sinikalliontie 3, FIN-02630 ESPOO, Tel. +358 9 615800, Fax. +358 9 61580920

France: 51 Rue Carnot, BP317, 92156 SURESNES Cedex, Tel. +33 1 40 99 6161, Fax. +33 1 40 99 6427

Germany: Hammerbrookstraße 69, D-20097 HAMBURG, Tel. +49 40 23 53 60, Fax. +49 40 23 536 300

Greece: No. 15, 25th March Street, GR 17778 TAVROS/ATHENS, Tel. +30 1 4894 339/239, Fax. +30 1 4814 240

Hungary: see Austria

India: Philips INDIA Ltd, Band Box Building, 2nd floor, 254-D, Dr. Annie Besant Road, Worli, MUMBAI 400 025, Tel. +91 22 493 8541, Fax. +91 22 493 0966

Indonesia: see Singapore

Ireland: Newstead, Clonskeagh, DUBLIN 14, Tel. +353 1 7640 000, Fax. +353 1 7640 200

Israel: RAPAC Electronics, 7 Kehilat Saloniki St, PO Box 18053, TEL AVIV 61180, Tel. +972 3 645 0444, Fax. +972 3 649 1007

Italy: PHILIPS SEMICONDUCTORS, Piazza IV Novembre 3, 20124 MILANO, Tel. +39 2 6752 2531, Fax. +39 2 6752 2557

Japan: Philips Bldg 13-37, Kohnan 2-chome, Minato-ku, TOKYO 108, Tel. +81 3 3740 5130, Fax. +81 3 3740 5077

Korea: Philips House, 260-199 Itaewon-dong, Yongsan-ku, SEOUL, Tel. +82 2 709 1412, Fax. +82 2 709 1415

Malaysia: No. 76 Jalan Universiti, 46200 PETALING JAYA, SELANGOR, Tel. +60 3 750 5214, Fax. +60 3 757 4880

Mexico: 5900 Gateway East, Suite 200, EL PASO, TEXAS 79905, Tel. +9-5 800 234 7381

Middle East: see Italy

Netherlands: Postbus 90050, 5600 PB EINDHOVEN, Bldg. VB, Tel. +31 40 27 82785, Fax. +31 40 27 88399

New Zealand: 2 Wagener Place, C.P.O. Box 1041, AUCKLAND, Tel. +64 9 849 4160, Fax. +64 9 849 7811

Norway: Box 1, Manglerud 0612, OSLO, Tel. +47 22 74 8000, Fax. +47 22 74 8341

Philippines: Philips Semiconductors Philippines Inc., 106 Valero St. Salcedo Village, P.O. Box 2108 MCC, MAKATI, Metro MANILA, Tel. +63 2 816 6380, Fax. +63 2 817 3474

Poland: Ul. Lukiska 10, PL 04-123 WARSZAWA, Tel. +48 22 612 2831, Fax. +48 22 612 2327

Portugal: see Spain

Romania: see Italy

Russia: Philips Russia, Ul. Usatcheva 35A, 119048 MOSCOW, Tel. +7 095 755 6918, Fax. +7 095 755 6919

Singapore: Lorong 1, Toa Payoh, SINGAPORE 1231, Tel. +65 350 2538, Fax. +65 251 6500

Slovakia: see Austria

Slovenia: see Italy

South Africa: S.A. PHILIPS Pty Ltd., 195-215 Main Road Martindale, 2092 JOHANNESBURG, P.O. Box 7430 Johannesburg 2000, Tel. +27 11 470 5911, Fax. +27 11 470 5494

South America: Al. Vicente Pinzon, 173, 6th floor, 04547-130 SÃO PAULO, SP, Brazil, Tel. +55 11 821 2333, Fax. +55 11 821 2382

Spain: Balmes 22, 08007 BARCELONA, Tel. +34 3 301 6312, Fax. +34 3 301 4107

Sweden: Kottbygatan 7, Akalla, S-16485 STOCKHOLM, Tel. +46 8 632 2000, Fax. +46 8 632 2745

Switzerland: Allmendstrasse 140, CH-8027 ZÜRICH, Tel. +41 1 488 2686, Fax. +41 1 488 3263

Taiwan: Philips Semiconductors, 6F, No. 96, Chien Kuo N. Rd., Sec. 1, TAIPEI, Taiwan Tel. +886 2 2134 2865, Fax. +886 2 2134 2874

Thailand: PHILIPS ELECTRONICS (THAILAND) Ltd., 209/2 Sanpavuth-Bangna Road Prakanong, BANGKOK 10260, Tel. +66 2 745 4090, Fax. +66 2 398 0793

Turkey: Talatpasa Cad. No. 5, 80640 GÜLTEPE/ISTANBUL, Tel. +90 212 279 2770, Fax. +90 212 282 6707

Ukraine: PHILIPS UKRAINE, 4 Patrice Lumumba str., Building B, Floor 7, 252042 KIEV, Tel. +380 44 264 2776, Fax. +380 44 268 0461

United Kingdom: Philips Semiconductors Ltd., 276 Bath Road, Hayes, MIDDLESEX UB3 5BX, Tel. +44 181 730 5000, Fax. +44 181 754 8421

United States: 811 East Arques Avenue, SUNNYVALE, CA 94088-3409, Tel. +1 800 234 7381

Uruguay: see South America

Vietnam: see Singapore

Yugoslavia: PHILIPS, Trg N. Pasica 5/v, 11000 BEOGRAD, Tel. +381 11 625 344, Fax.+381 11 635 777

For all other countries apply to: Philips Semiconductors, International Marketing & Sales Communications, Building BE-p, P.O. Box 218, 5600 MD EINDHOVEN, The Netherlands, Fax. +31 40 27 24825

Internet: http://www.semiconductors.philips.com

© Philips Electronics N.V. 1998

SCA57

All rights are reserved. Reproduction in whole or in part is prohibited without the prior written consent of the copyright owner.

The information presented in this document does not form part of any quotation or contract, is believed to be accurate and reliable and may be changed without notice. No liability will be accepted by the publisher for any consequence of its use. Publication thereof does not convey nor imply any license under patent- or other industrial or intellectual property rights.

Printed in The Netherlands 415108/1200/04/pp24 Date of release: 1998 Apr 21 Document order number: 9397 750 03769

Let's make things better.

Philips Semiconductors

PHILIPS