CMOS Low Voltage 2.5 Ω Dual SPDT Switch

ADG736

FEATURES

1.8 V to 5.5 V single supply
Automotive temperature range: −40°C to +125°C
2.5 Ω (typical) on resistance
Low on resistance flatness
−3 dB bandwidth > 200 MHz
Rail-to-rail operation
10-lead MSOP package
Fast switching times
  t_{ON}: 16 ns
  t_{OFF}: 8 ns
Typical power consumption (<0.01 µW)
TTL-/CMOS-compatible

APPLICATIONS

USB 1.1 signal switching circuits
Cell phones
PDAs
Battery-powered systems
Communications systems
Sample-and-hold systems
Audio signal routing
Audio and video switching
Mechanical reed relay replacement

FUNCTIONAL BLOCK DIAGRAM

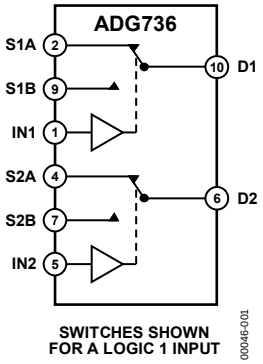

Figure 1.

GENERAL DESCRIPTION

The ADG736 is a monolithic device comprising two independently selectable CMOS single pole, double throw (SPDT) switches. These switches are designed using a submicron process that provides low power dissipation yet gives high switching speed, low on resistance, low leakage currents, and wide input signal bandwidth.

The on resistance profile is very flat over the full analog signal range. This ensures excellent linearity and low distortion when switching audio signals. Fast switching speed also makes the part suitable for video signal switching.

The ADG736 operates from a single 1.8 V to 5.5 V supply, making it ideally suited to portable and battery-powered instruments.

Each switch conducts equally well in both directions when on, and each has an input signal range that extends to the power supplies. The ADG736 exhibits break-before-make switching action.

The ADG736 is available in a 10-lead MSOP package.

PRODUCT HIGHLIGHTS

1. 1.8 V to 5.5 V Single-Supply Operation. The ADG736 offers high performance, including low on resistance and fast switching times. It is fully specified and guaranteed with 3 V and 5 V supply rails.
2. Very Low R_{ON} (4.5 Ω Maximum at 5 V, 8 Ω Maximum at 3 V). At a supply voltage of 1.8 V, R_{ON} is typically 35 Ω over the temperature range.
3. Low On Resistance Flatness.
4. −3 dB Bandwidth > 200 MHz.
5. Low Power Dissipation. CMOS construction ensures low power dissipation.
6. Fast t_{ON}/t_{OFF}.
7. Break-Before-Make Switching Action.
8. 10-Lead MSOP Package.

Rev. C

One Technology Way, P.O. Box 9106, Norwood, MA 02062-9106, U.S.A.
Tel: 781.329.4700 **www.analog.com**
Fax: 781.461.3113

TABLE OF CONTENTS

REVISION HISTORY

12/07—Rev. B to Rev. C

Updated Temperature Range (Throughout) ... 1
Changes to Features Section ... 1
Changes to Figure 4 and Figure 5 ... 7
Changes to Ordering Guide ... 12

1/07—Rev. A to Rev. B

Updated Format ... Universal
Changes to Leakage Currents ... 3
Changes to Leakage Currents ... 4
Changes to Ordering Guide ... 12
Updated Outline Dimensions ... 12

11/03—Rev. 0 to Rev. A

Renumbered Figures and TPCs ... Universal
Change to Title ... 1
Changes to Applications ... 1
Changes to Absolute Maximum Ratings ... 4
Changes to Ordering Guide ... 4
Changes to Test Circuit 3 ... 7
Changes to Outline Dimensions ... 8

SPECIFICATIONS

V_{DD} = 5 V ± 10%, GND = 0 V. All specifications −40°C to +125°C, unless otherwise noted.

Table 1.

Parameter	B Version 25°C	B Version −40°C to +85°C	B Version −40°C to +125°C	Unit	Test Conditions/Comments
ANALOG SWITCH					
Analog Signal Range			0 V to V_{DD}	V	
On Resistance (R_{ON})	2.5			Ω typ	V_S = 0 V to V_{DD}, I_{DS} = −10 mA; see Figure 10
	4	4.5	7	Ω max	
On Resistance Match Between Channels (ΔR_{ON})	0.1			Ω typ	V_S = 0 V to V_{DD}, I_{DS} = −10 mA
		0.4	0.4	Ω max	
On Resistance Flatness ($R_{FLAT\ (ON)}$)	0.5			Ω typ	V_S = 0 V to V_{DD}, I_{DS} = −10 mA
		1.2	1.5	Ω max	
LEAKAGE CURRENTS					V_{DD} = 5.5 V
Source Off Leakage I_S (Off)	±0.01		1	nA typ	V_S = 4.5 V/1 V, V_D = 1 V/4.5 V; see Figure 11
Channel On Leakage I_D, I_S (On)	±0.01		5	nA typ	V_S = V_D = 1 V or 4.5 V; see Figure 12
DIGITAL INPUTS					
Input High Voltage, V_{INH}		2.4	2.4	V min	
Input Low Voltage, V_{INL}		0.8	0.8	V max	
Input Current, I_{INL} or I_{INH}	0.005			µA typ	V_{IN} = V_{INL} or V_{INH}
		± 0.1	± 0.1	µA max	
DYNAMIC CHARACTERISTICS[1]					
t_{ON}	12			ns typ	R_L = 300 Ω, C_L = 35 pF
		16	16	ns max	V_S = 3 V; see Figure 13
t_{OFF}	5			ns typ	R_L = 300 Ω, C_L = 35 pF
		8	8	ns max	V_S = 3 V; see Figure 13
Break-Before-Make Time Delay, t_D	7			ns typ	R_L = 300 Ω, C_L = 35 pF
		1	1	ns min	V_{S1} = V_{S2} = 3 V; see Figure 14
Off Isolation	−62			dB typ	R_L = 50 Ω, C_L = 5 pF, f = 10 MHz
	−82			dB typ	R_L = 50 Ω, C_L = 5 pF, f = 1 MHz; see Figure 15
Channel-to-Channel Crosstalk	−62			dB typ	R_L = 50 Ω, C_L = 5 pF, f = 10 MHz
	−82			dB typ	R_L = 50 Ω, C_L = 5 pF, f = 1 MHz; see Figure 16
Bandwidth (−3 dB)	200			MHz typ	R_L = 50 Ω, C_L = 5 pF; see Figure 17
C_S (Off)	9			pF typ	
C_D, C_S (On)	32			pF typ	
POWER REQUIREMENTS					V_{DD} = 5.5 V
I_{DD}	0.001			µA typ	Digital inputs = 0 V or 5 V
		1.0	1.0	µA max	

[1] Guaranteed by design; not subject to production test.

V_{DD} = 3 V ± 10%, GND = 0 V. All specifications −40°C to +125°C, unless otherwise noted.

Table 2.

Parameter	B Version 25°C	B Version −40°C to +85°C	B Version −40°C to +125°C	Unit	Test Conditions/Comments
ANALOG SWITCH					
Analog Signal Range			0 V to V_{DD}	V	
On Resistance (R_{ON})	5	5.5		Ω typ	V_S = 0 V to V_{DD}, I_{DS} = −10 mA; see Figure 10
		8	12	Ω max	See Figure 10
On Resistance Match Between Channels (ΔR_{ON})	0.1			Ω typ	V_S = 0 V to V_{DD}, I_{DS} = −10 mA
		0.4	0.4	Ω max	
On Resistance Flatness ($R_{FLAT\ (ON)}$)		2.5	2.5	Ω typ	V_S = 0 V to V_{DD}, I_{DS} = −10 mA
LEAKAGE CURRENTS					V_{DD} = 3.3 V
Source Off Leakage I_S (Off)	±0.01		1	nA typ	V_S = 3 V/1 V, V_D = 1 V/3 V; see Figure 11
Channel On Leakage I_D, I_S (On)	±0.01		5	nA typ	V_S = V_D = 1 V or 3 V; see Figure 12
DIGITAL INPUTS					
Input High Voltage, V_{INH}		2.0	2.4	V min	
Input Low Voltage, V_{INL}		0.4	0.8	V max	
Input Current, I_{INL} or I_{INH}	0.005			µA typ	V_{IN} = V_{INL} or V_{INH}
		±0.1	± 0.1	µA max	
DYNAMIC CHARACTERISTICS[1]					
t_{ON}	14			ns typ	R_L = 300 Ω, C_L = 35 pF
		20	20	ns max	V_S = 2 V; see Figure 13
t_{OFF}	6			ns typ	R_L = 300 Ω, C_L = 35 pF
		10	10	ns max	V_S = 2 V; see Figure 13
Break-Before-Make Time Delay, t_D	7			ns typ	R_L = 300 Ω, C_L = 35 pF
		1	1	ns min	V_{S1} = V_{S2} = 2 V; see Figure 14
Off Isolation	−62			dB typ	R_L = 50 Ω, C_L = 5 pF, f = 10 MHz
	−82			dB typ	R_L = 50 Ω, C_L = 5 pF, f = 1 MHz; see Figure 15
Channel-to-Channel Crosstalk	−62			dB typ	R_L = 50 Ω, C_L = 5 pF, f = 10 MHz
	−82			dB typ	R_L = 50 Ω, C_L = 5 pF, f = 1 MHz; see Figure 16
Bandwidth (−3 dB)	200			MHz typ	R_L = 50 Ω, C_L = 5 pF; see Figure 17
C_S (Off)	9			pF typ	
C_D, C_S (On)	32			pF typ	
POWER REQUIREMENTS					V_{DD} = 3.3 V
I_{DD}	0.001			µA typ	Digital inputs = 0 V or 3 V
		1.0	1.0	µA max	

[1] Guaranteed by design; not subject to production test.

ABSOLUTE MAXIMUM RATINGS

T_A = 25°C, unless otherwise noted.

Table 3.

Parameter	Rating
V_{DD} to GND	−0.3 V to +6 V
Analog, Digital Inputs[1]	−0.3 V to V_{DD} + 0.3 V or 30 mA, whichever occurs first
Continuous Current, S or D	30 mA
Peak Current, S or D	100 mA (Pulsed at 1 ms, 10% duty cycle maximum)
Operating Temperature Range	
Automotive	−40°C to +125°C
Storage Temperature Range	−65°C to +150°C
Junction Temperature	150°C
MSOP Package, Power Dissipation	315 mW
θ_{JA} Thermal Impedance	205°C/W
Lead Temperature (Soldering, 10 sec)	300°C
IR Reflow (Peak Temperature, <20 sec)	235°C
Lead-Free Reflow Soldering	
Peak Temperature	260(+0/−5)°C
Time at Peak Temperature	10 sec to 40 sec
ESD	2 kV

[1] Overvoltages at IN, S, or D are clamped by internal diodes. Current should be limited to the maximum ratings given.

Stresses above those listed under Absolute Maximum Ratings may cause permanent damage to the device. This is a stress rating only; functional operation of the device at these or any other conditions above those indicated in the operational section of this specification is not implied. Exposure to absolute maximum rating conditions for extended periods may affect device reliability.

ESD CAUTION

ESD (electrostatic discharge) sensitive device. Charged devices and circuit boards can discharge without detection. Although this product features patented or proprietary protection circuitry, damage may occur on devices subjected to high energy ESD. Therefore, proper ESD precautions should be taken to avoid performance degradation or loss of functionality.

PIN CONFIGURATION AND FUNCTION DESCRIPTIONS

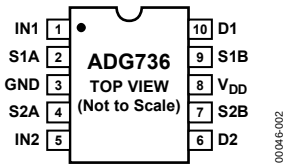

Figure 2. Pin Configuration

Table 4. Pin Function Descriptions

Pin No.	Mnemonic	Description
1	IN1	Logic Control Input.
2	S1A	Source Terminal. May be an input or output.
3	GND	Ground (0 V) Reference.
4	S2A	Source Terminal. May be an input or output.
5	IN2	Logic Control Input.
6	D2	Drain Terminal. May be an input or output.
7	S2B	Source Terminal. May be an input or output.
8	V_{DD}	Most Positive Power Supply Potential.
9	S1B	Source Terminal. May be an input or output.
10	D1	Drain Terminal. May be an input or output.

Table 5. Truth Table

Logic	Switch A	Switch B
0	Off	On
1	On	Off

TYPICAL PERFORMANCE CHARACTERISTICS

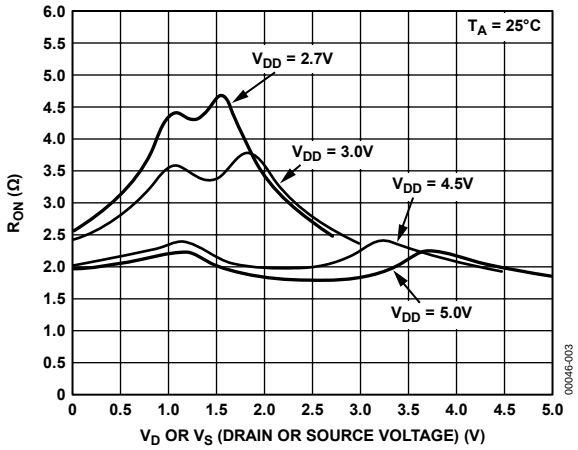

Figure 3. On Resistance as a Function of V_D or V_S Single Supplies

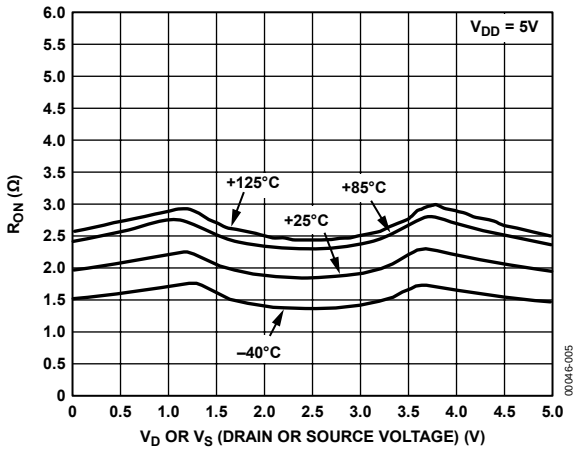

Figure 5. On Resistance as a Function of V_D or V_S for Different Temperatures V_{DD} = 5 V

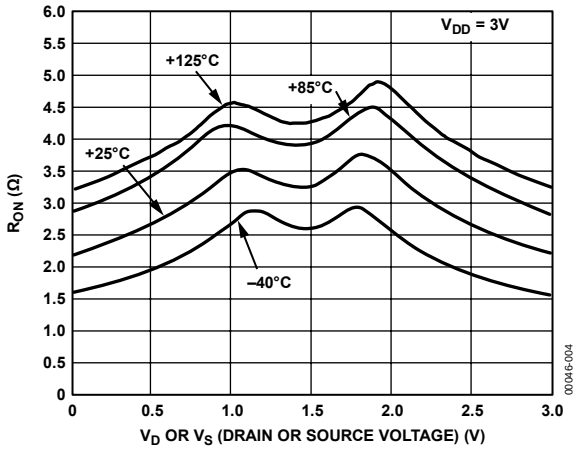

Figure 4. On Resistance as a Function of V_D or V_S for Different Temperatures V_{DD} = 3 V

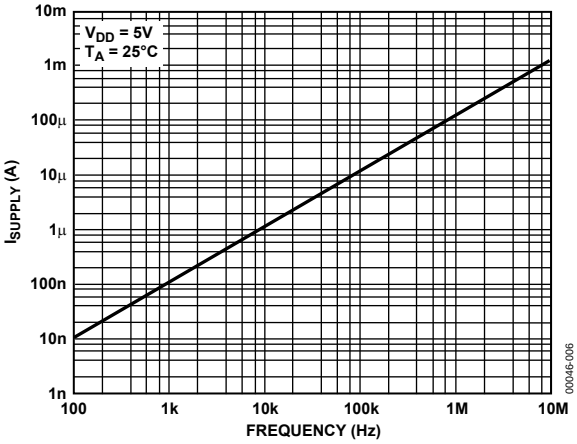

Figure 6. Supply Current vs. Input Switching Frequency

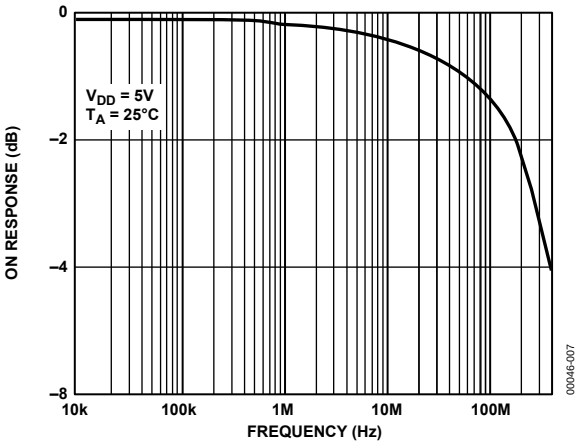

Figure 7. Bandwidth

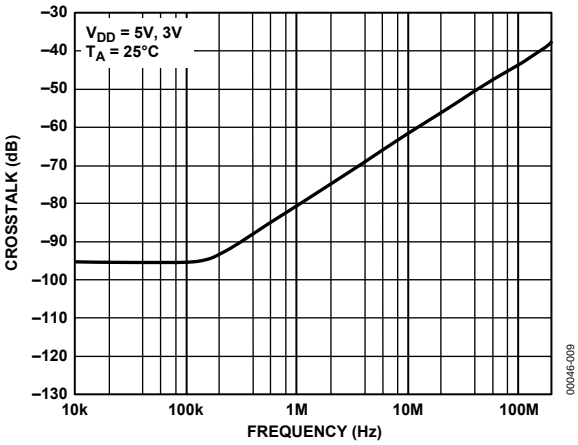

Figure 9. Crosstalk vs. Frequency

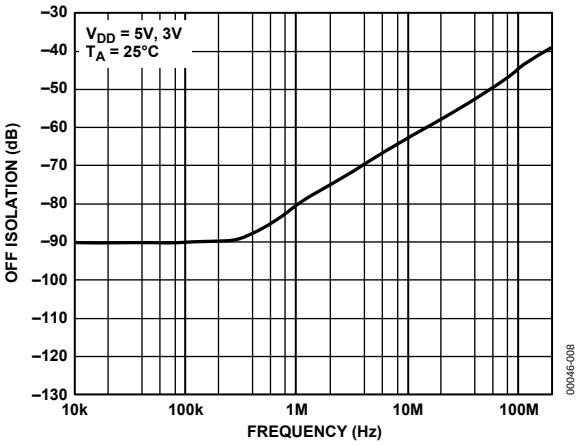

Figure 8. Off Isolation vs. Frequency

TEST CIRCUITS

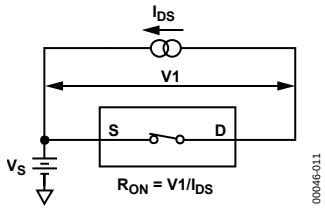

Figure 10. On Resistance

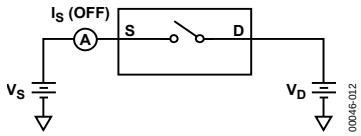

Figure 11. Off Leakage

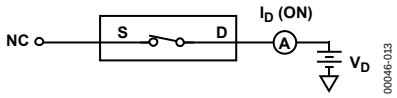

Figure 12. On Leakage

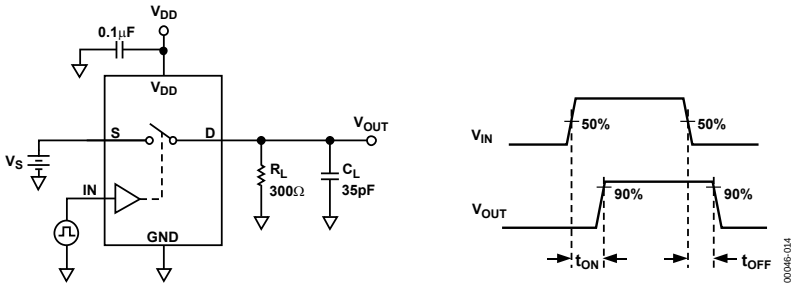

Figure 13. Switching Times

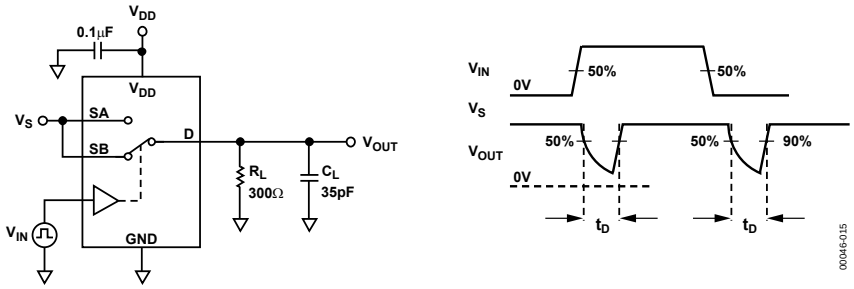

Figure 14. Break-Before-Make Time Delay, t_D

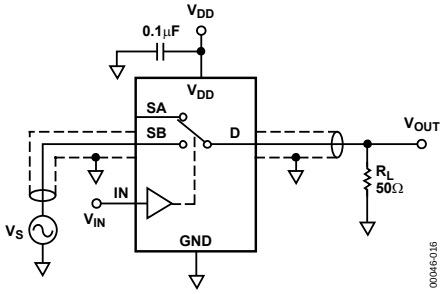

Figure 15. Off Isolation

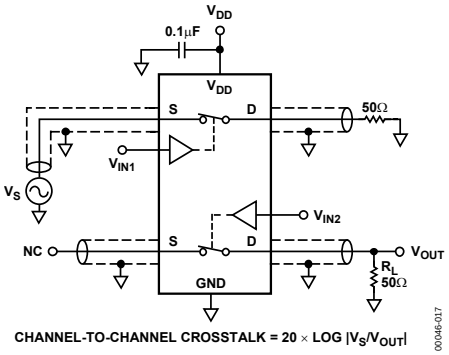

Figure 16. Channel-to-Channel Crosstalk

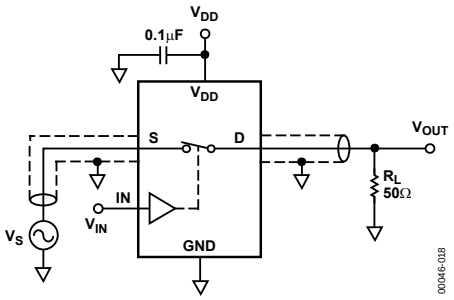

Figure 17. Bandwidth

TERMINOLOGY

R_{ON}
Ohmic resistance between Terminal D and Terminal S.

ΔR_{ON}
On resistance match between any two channels; that is, R_{ON} maximum − R_{ON} minimum.

$R_{FLAT\ (ON)}$
Flatness is defined as the difference between the maximum and minimum value of on resistance as measured over the specified analog signal range.

I_S (Off)
Source leakage current with the switch off.

I_D, I_S (On)
Channel leakage current with the switch on.

V_D (V_S)
Analog voltage on Terminal D and Terminal S.

C_S (Off)
Off switch source capacitance.

C_D, C_S (On)
On switch capacitance.

t_{ON}
Delay between applying the digital control input and the output switching on. See Figure 13.

t_{OFF}
Delay between applying the digital control input and the output switching off. See Figure 13.

t_D
Off time or on time measured between the 90% points of both switches, when switching from one address state to another. See Figure 14.

Crosstalk
A measure of unwanted signal that is coupled from one channel to another as a result of parasitic capacitance.

Off Isolation
A measure of unwanted signal coupling through an off switch.

Bandwidth
The frequency at which the output is attenuated by −3 dB.

On Response
The frequency response of the on switch.

On Loss
The voltage drop across the on switch, seen on the on response vs. frequency plot (see Figure 7) as how many decibels (dB) the signal is away from 0 dB at very low frequencies.

APPLICATIONS INFORMATION

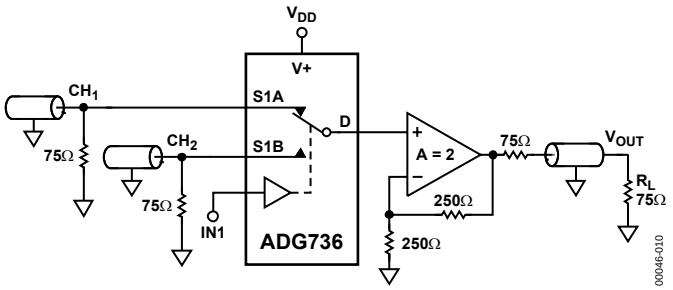

Figure 18. Using the ADG736 to Select Between Two Video Signals

OUTLINE DIMENSIONS

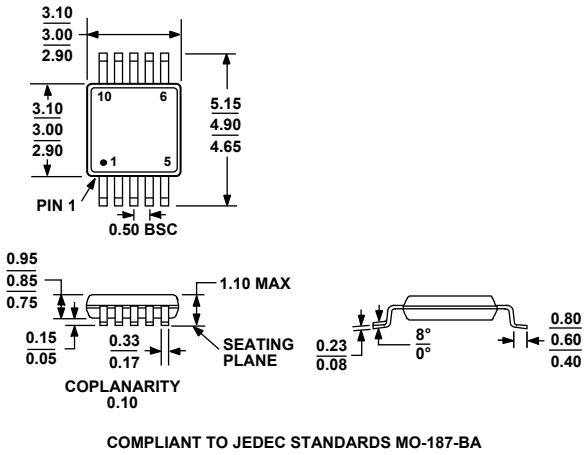

Figure 19. 10-Lead Mini Small Outline Package [MSOP] (RM-10)
Dimensions shown in millimeters

ORDERING GUIDE

Model	Temperature Range	Package Description	Package Option	Branding
ADG736BRM	−40°C to +125°C	10-Lead Mini Small Outline Package (MSOP)	RM-10	SAB
ADG736BRM-REEL	−40°C to +125°C	10-Lead Mini Small Outline Package (MSOP)	RM-10	SAB
ADG736BRM-REEL7	−40°C to +125°C	10-Lead Mini Small Outline Package (MSOP)	RM-10	SAB
ADG736BRMZ[1]	−40°C to +125°C	10-Lead Mini Small Outline Package (MSOP)	RM-10	SAB#
ADG736BRMZ-REEL[1]	−40°C to +125°C	10-Lead Mini Small Outline Package (MSOP)	RM-10	SAB#
ADG736BRMZ-REEL7[1]	−40°C to +125°C	10-Lead Mini Small Outline Package (MSOP)	RM-10	SAB#

[1] Z = RoHS Compliant Part, # denotes RoHS compliant part may be top or bottom marked.