High Efficiency, 2-Phase Synchronous Step-Down Switching Regulators

FEATURES

- **Wide Output Voltage Range: 0.8V ≤ V_{OUT} ≤ 14V**
- **Out-of-Phase Controllers Reduce Required Input Capacitance and Power Supply Induced Noise**
- **OPTI-LOOP® Compensation Minimizes C_{OUT}**
- **±1% Output Voltage Accuracy**
- **Power Good Output Voltage Monitor**
- **Phase-Lockable Fixed Frequency 250kHz to 550kHz**
- Latched Short-Circuit Shutdown (LTC3727 Only)
- Dual N-Channel MOSFET Synchronous Drive
- Wide V_{IN} Range: 4V to 36V Operation
- Very Low Dropout Operation: 99% Duty Cycle
- Adjustable Soft-Start Current Ramping
- Foldback Output Current Limiting
- Output Overvoltage Protection
- Low Shutdown I_Q: 20µA
- Selectable Constant Frequency or Burst Mode® Operation
- Small 28-Lead SSOP Package
- LTC3727-1 Also Available in the 5mm × 5mm QFN Package

APPLICATIONS

- Telecom Systems
- Automotive Systems
- Battery-Operated Digital Devices

DESCRIPTION

The LTC®3727/LTC3727-1 are high performance dual step-down switching regulator controllers that drive all N-channel synchronous power MOSFET stages. A constant frequency current mode architecture allows phase-lockable frequency of up to 550kHz. Power loss and noise due to the ESR of the input capacitors are minimized by operating the two controller output stages out of phase.

OPTI-LOOP compensation allows the transient response to be optimized over a wide range of output capacitance and ESR values. There is a precision 0.8V reference and a power good output indicator. A wide 4V to 30V (36V maximum) input supply range encompasses all battery chemistries.

A RUN/SS pin for each controller provides soft-start, and on the LTC3727GN, optional timed, short-circuit shutdown. Current foldback limits MOSFET heat dissipation during short-circuit conditions when overcurrent latchoff is disabled. Output overvoltage protection circuitry latches on the bottom MOSFET until V_{OUT} returns to normal. The FCB mode pin can select among Burst Mode, constant frequency mode and continuous inductor current mode or regulate a secondary winding.

LT, LTC and LTM are registered trademarks of Linear Technology Corporation. Burst Mode and OPTI-LOOP are registered trademarks of Linear Technology Corporation. All other trademarks are the property of their respective owners. Protected by U.S. Patents, including 5481178, 5929620, 6177787, 6144194, 6100678, 5408150, 6580258, 6304066, 5705919.

TYPICAL APPLICATION

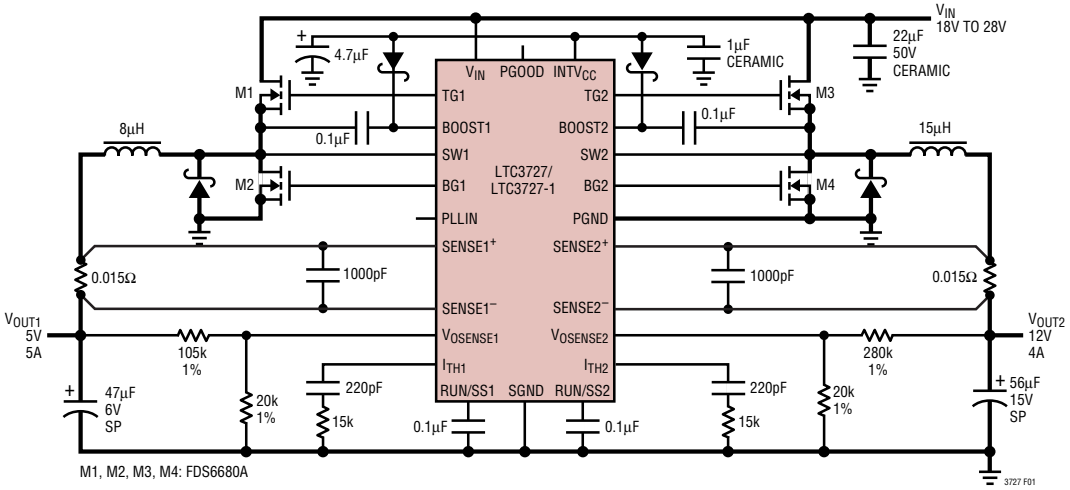

Figure 1. High Efficiency Dual 12V/5V Step-Down Converter

ABSOLUTE MAXIMUM RATINGS (Note 1)

Input Supply Voltage (V_{IN}) ..... 36V to –0.3V
Top Side Driver Voltages
(BOOST1, BOOST2) ..... 42V to –0.3V
Switch Voltage (SW1, SW2) ..... 36V to –5V
$INTV_{CC}$, $EXTV_{CC}$, (BOOST1-SW1),
(BOOST2-SW2) ..... 8.5V to –0.3V
RUN/SS1, RUN/SS2, PGOOD ..... 7V to –0.3V
$SENSE1^+$, $SENSE2^+$, $SENSE1^-$,
$SENSE2^-$ Voltages ..... 14V to –0.3V
PLLIN, PLLFLTR, FCB Voltages ..... $INTV_{CC}$ to –0.3V
I_{TH1}, I_{TH2}, $V_{OSENSE1}$, $V_{OSENSE2}$ Voltages ... 2.7V to –0.3V
Peak Output Current <10µs (TG1, TG2, BG1, BG2) ... 3A
$INTV_{CC}$ Peak Output Current 50mA
Operating Temperature Range (Note 2) .. –40°C to 85°C
Junction Temperature (Note 3) ..... 125°C
Storage Temperature Range ..... –65°C to 125°C
Lead Temperature
(Soldering, 10 sec, G Package) ..... 300°C
Solder Reflow Temperature (UH Package) ..... 265°C

PACKAGE/ORDER INFORMATION

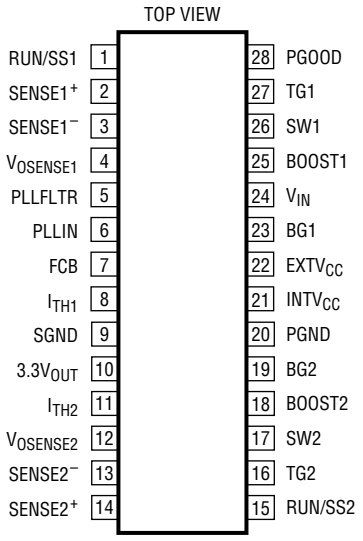

G PACKAGE
28-LEAD PLASTIC SSOP
T_{JMAX} = 125°C, θ_{JA} = 95°C/W

ORDER PART NUMBER

LTC3727EG
LTC3727EG-1
LTC3727IG-1

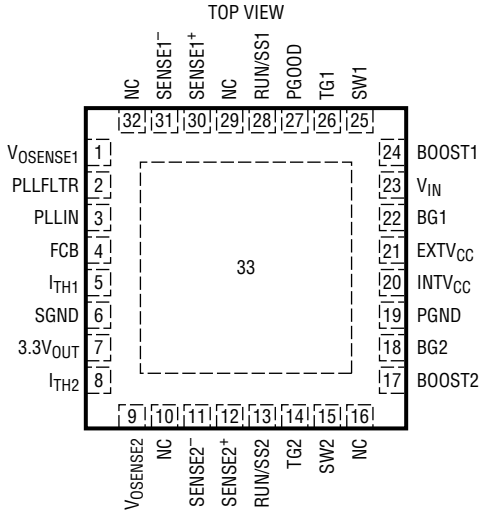

UH PACKAGE
32-LEAD (5mm × 5mm) PLASTIC QFN
T_{JMAX} = 125°C, θ_{JA} = 34°C/W
EXPOSED PAD (PIN 33) IS SGND
(MUST BE SOLDERED TO PCB)

ORDER PART NUMBER

LTC3727EUH-1

UH PART MARKING

37271

Order Options Tape and Reel: Add #TR Lead Free: Add #PBF Lead Free Tape and Reel: Add #TRPBF
Lead Free Part Marking: http://www.linear.com/leadfree/

Consult LTC Marketing for parts specified with wider operating temperature ranges.

ELECTRICAL CHARACTERISTICS

The ● denotes the specifications which apply over the full operating temperature range, otherwise specifications are at T_A = 25°C. V_{IN} = 15V, $V_{RUN/SS1,2}$ = 5V unless otherwise noted.

SYMBOL	PARAMETER	CONDITIONS		MIN	TYP	MAX	UNITS
Main Control Loops							
$V_{OSENSE1,2}$	Regulated Feedback Voltage	(Note 4); $I_{TH1,2}$ Voltage = 1.2V	●	0.792	0.800	0.808	V
$I_{VOSENSE1,2}$	Feedback Current	(Note 4)			–5	–50	nA
$V_{REFLNREG}$	Reference Voltage Line Regulation	V_{IN} = 3.6V to 30V (Note 4)			0.002	0.02	%/V

ELECTRICAL CHARACTERISTICS

The ● denotes the specifications which apply over the full operating temperature range, otherwise specifications are at T_A = 25°C. V_{IN} = 15V, $V_{RUN/SS1,2}$ = 5V unless otherwise noted.

SYMBOL	PARAMETER	CONDITIONS		MIN	TYP	MAX	UNITS
$V_{LOADREG}$	Output Voltage Load Regulation	(Note 4) Measured in Servo Loop; ΔI_{TH} Voltage = 1.2V to 0.7V Measured in Servo Loop; ΔI_{TH} Voltage = 1.2V to 2.0V	 ● ●		 0.1 −0.1	 0.5 −0.5	 % %
$g_{m1,2}$	Transconductance Amplifier g_m	$I_{TH1,2}$ = 1.2V; Sink/Source 5µA (Note 4)			1.3		mmho
$g_{mGBW1,2}$	Transconductance Amplifier GBW	$I_{TH1,2}$ = 1.2V (Note 4)			3		MHz
I_Q	Input DC Supply Current Normal Mode Shutdown	(Note 5) V_{IN} = 15V, $EXTV_{CC}$ Tied to V_{OUT1}, V_{OUT1} = 8.5V $V_{RUN/SS1,2}$ = 0V			 670 20	 35	 µA µA
V_{FCB}	Forced Continuous Threshold		●	0.76	0.800	0.84	V
I_{FCB}	Forced Continuous Pin Current	V_{FCB} = 0.85V		−0.30	−0.18	−0.05	µA
$V_{BINHIBIT}$	Burst Inhibit (Constant Frequency) Threshold	Measured at FCB pin			6.8	7.3	V
UVLO	Undervoltage Lockout	V_{IN} Ramping Down	●		3.5	4	V
V_{OVL}	Feedback Overvoltage Lockout	Measured at $V_{OSENSE1,2}$	●	0.84	0.86	0.88	V
I_{SENSE}	Sense Pins Total Source Current	(Each Channel) $V_{SENSE1-,2-}$ = $V_{SENSE1+,2+}$ = 0V		−85	−60		µA
DF_{MAX}	Maximum Duty Factor	In Dropout		98	99.4		%
$I_{RUN/SS1,2}$	Soft-Start Charge Current	$V_{RUN/SS1,2}$ = 1.9V		0.5	1.2		µA
$V_{RUN/SS1,2}$ ON	RUN/SS Pin ON Threshold	$V_{RUN/SS1}$, $V_{RUN/SS2}$ Rising		1.0	1.5	1.9	V
$V_{RUN/SS1,2}$ LT	RUN/SS Pin Latchoff Arming Threshold	$V_{RUN/SS1}$, $V_{RUN/SS2}$ Rising from 3V (LTC3727 Only)			4.1	4.5	V
$I_{SCL1,2}$	RUN/SS Discharge Current	Soft-Short Condition $V_{OSENSE1,2}$ = 0.5V, $V_{RUN/SS1,2}$ = 4.5V (LTC 3727 Only)		0.5	2	4	µA
I_{SDLHO}	Shutdown Latch Disable Current	$V_{OSENSE1,2}$ = 0.5V (LTC3727 Only)			1.6	5	µA
$V_{SENSE(MAX)}$	Maximum Current Sense Threshold	$V_{OSENSE1,2}$ = 0.7V,$V_{SENSE1-,2-}$ = 12V	●	105	135	165	mV
 TG1, 2 t_r TG1, 2 t_f	TG Transition Time: Rise Time Fall Time	(Note 6) C_{LOAD} = 3300pF C_{LOAD} = 3300pF			 50 50	 90 90	 ns ns
 BG1, 2 t_r BG1, 2 t_f	BG Transition Time: Rise Time Fall Time	(Note 6) C_{LOAD} = 3300pF C_{LOAD} = 3300pF			 40 40	 90 80	 ns ns
TG/BG t_{1D}	Top Gate Off to Bottom Gate On Delay Synchronous Switch-On Delay Time	C_{LOAD} = 3300pF Each Driver			90		ns
BG/TG t_{2D}	Bottom Gate Off to Top Gate On Delay Top Switch-On Delay Time	C_{LOAD} = 3300pF Each Driver			90		ns
$t_{ON(MIN)}$	Minimum On-Time	Tested with a Square Wave (Note 7)			180		ns
$INTV_{CC}$ Linear Regulator							
V_{INTVCC}	Internal V_{CC} Voltage	8.5V < V_{IN} < 30V, V_{EXTVCC} = 6V		7.2	7.5	7.8	V
V_{LDO} INT	$INTV_{CC}$ Load Regulation	I_{CC} = 0mA to 20mA, V_{EXTVCC} = 6V			0.2	1.0	%
V_{LDO} EXT	$EXTV_{CC}$ Voltage Drop	I_{CC} = 20mA, V_{EXTVCC} = 8.5V			70	160	mV
V_{EXTVCC}	$EXTV_{CC}$ Switchover Voltage	I_{CC} = 20mA, $EXTV_{CC}$ Ramping Positive	●	6.9	7.3		V
V_{LDOHYS}	$EXTV_{CC}$ Hysteresis				0.3		V
Oscillator and Phase-Locked Loop							
f_{NOM}	Nominal Frequency	$V_{PLLFLTR}$ = 1.2V		350	380	430	kHz
f_{LOW}	Lowest Frequency	$V_{PLLFLTR}$ = 0V		220	255	290	kHz
f_{HIGH}	Highest Frequency	$V_{PLLFLTR}$ ≥ 2.4V		460	530	580	kHz

ELECTRICAL CHARACTERISTICS

The ● denotes the specifications which apply over the full operating temperature range, otherwise specifications are at T_A = 25°C. V_{IN} = 15V, $V_{RUN/SS1,2}$ = 5V unless otherwise noted.

SYMBOL	PARAMETER	CONDITIONS		MIN	TYP	MAX	UNITS
R_{PLLIN}	PLLIN Input Resistance				50		kΩ
$I_{PLLFLTR}$	Phase Detector Output Current Sinking Capability	$f_{PLLIN} < f_{OSC}$			–15		µA
	Sourcing Capability	$f_{PLLIN} > f_{OSC}$			15		µA
3.3V Linear Regulator							
$V_{3.3OUT}$	3.3V Regulator Output Voltage	No Load	●	3.25	3.35	3.45	V
$V_{3.3IL}$	3.3V Regulator Load Regulation	$I_{3.3}$ = 0mA to 10mA			0.5	2.5	%
$V_{3.3VL}$	3.3V Regulator Line Regulation	6V < V_{IN} < 30V (LTC3727) 6V < V_{IN} < 30V (LTC3727-1)			0.05 0.05	0.2 0.3	% %
PGOOD Output							
V_{PGL}	PGOOD Voltage Low	I_{PGOOD} = 2mA			0.1	0.3	V
I_{PGOOD}	PGOOD Leakage Current	V_{PGOOD} = 5V				±1	µA
V_{PG}	PGOOD Trip Level, Either Controller	V_{OSENSE} with Respect to Set Output Voltage V_{OSENSE} Ramping Negative V_{OSENSE} Ramping Positive		 –6 6	 –7.5 7.5	 –9.5 9.5	 % %

Note 1: Stresses beyond those listed under Absolute Maximum Ratings may cause permanent damage to the device. Exposure to any Absolute Maximum Rating condition for extended periods may affect device reliability and lifetime.

Note 2: The LTC3727E/LTC3727E-1 are guaranteed to meet performance specifications from 0°C to 85°C. Specifications over the –40°C to 85°C operating temperature range are assured by design, characterization and correlation with statistical process controls. The LTC3727IG-1 is guaranteed to meet performance specifications over the –40°C to 85°C operating temperature range.

Note 3: T_J is calculated from the ambient temperature T_A and power dissipation P_D according to the following formulas:

LTC3727EG/LTC3727EG-1/LTC3727IG-1: $T_J = T_A + (P_D \bullet 95\ °C/W)$
LTC3727EUH-1: $T_J = T_A + (P_D \bullet 34\ °C/W)$

Note 4: The LTC3727/LTC3727-1 are tested in a feedback loop that servos $V_{ITH1,2}$ to a specified voltage and measures the resultant $V_{OSENSE1,2}$.

Note 5: Dynamic supply current is higher due to the gate charge being delivered at the switching frequency. See Applications Information.

Note 6: Rise and fall times are measured using 10% and 90% levels. Delay times are measured using 50% levels.

Note 7: The minimum on-time condition is specified for an inductor peak-to-peak ripple current ≥40% of I_{MAX} (see minimum on-time considerations in the Applications Information section).

TYPICAL PERFORMANCE CHARACTERISTICS

Efficiency vs Output Current and Mode (Figure 13)

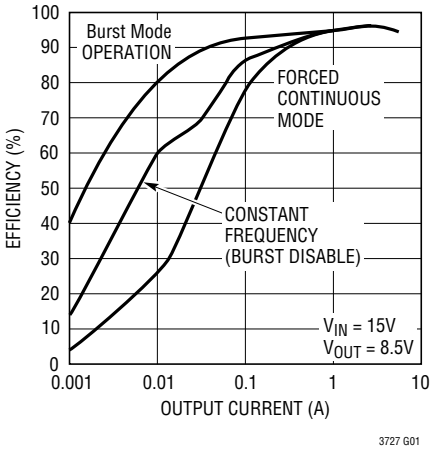

Efficiency vs Output Current (Figure 13)

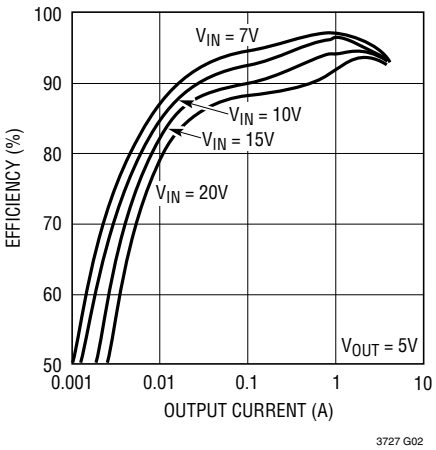

Efficiency vs Input Voltage (Figure 13)

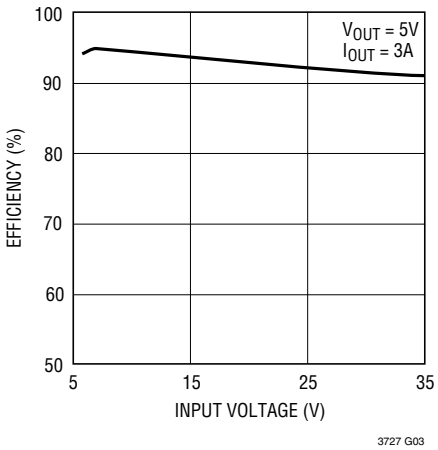

TYPICAL PERFORMANCE CHARACTERISTICS

Supply Current vs Input Voltage and Mode (Figure 13)

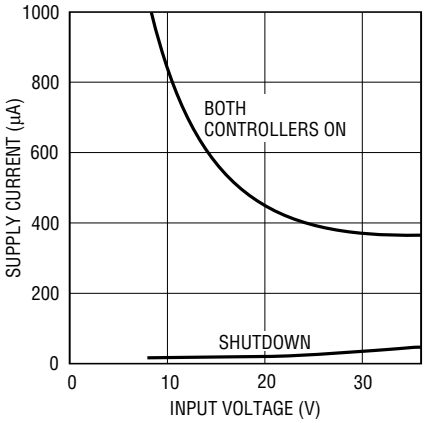

$EXTV_{CC}$ Voltage Drop

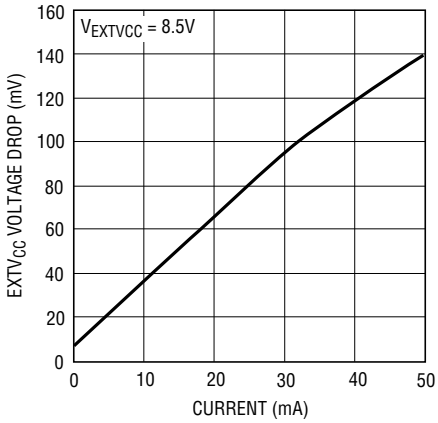

Internal 7.5V LDO Line Regulation

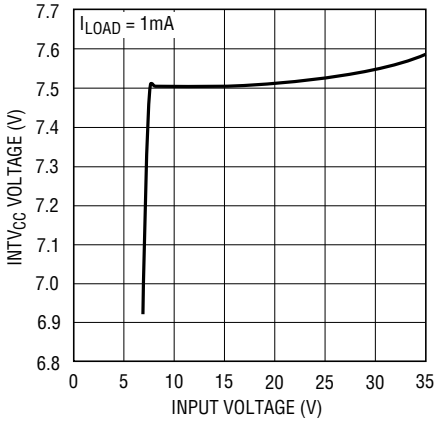

Maximum Current Sense Threshold vs Duty Factor

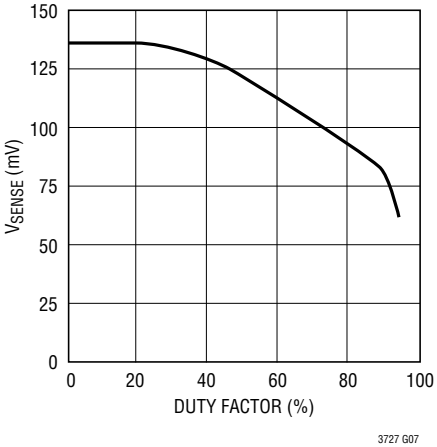

Maximum Current Sense Threshold vs Percent of Nominal Output Voltage (Foldback)

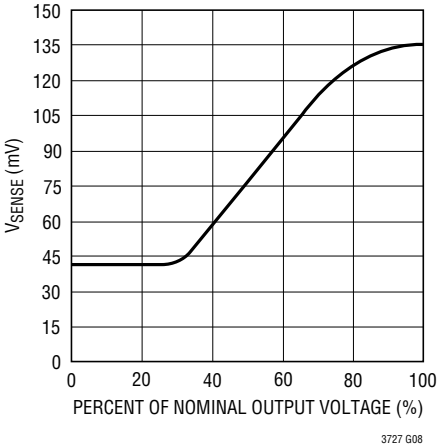

Maximum Current Sense Threshold vs $V_{RUN/SS}$ (Soft-Start)

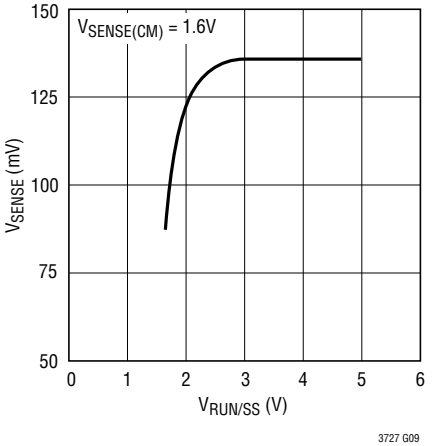

Current Sense Threshold vs I_{TH} Voltage

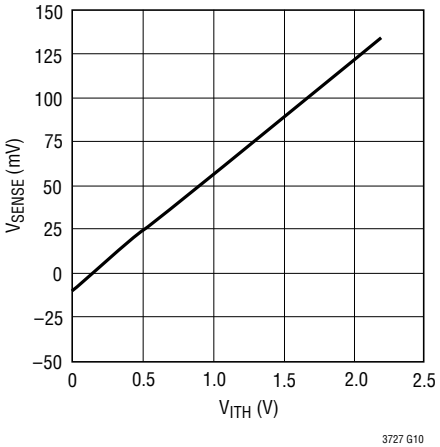

Load Regulation

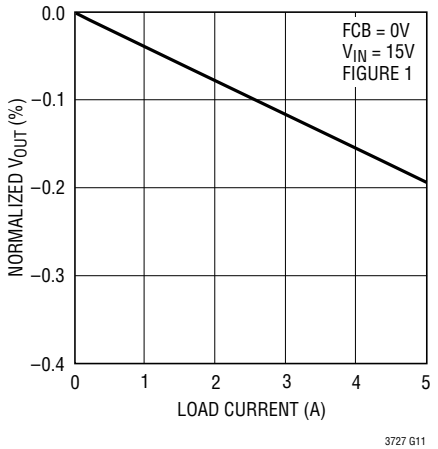

V_{ITH} vs $V_{RUN/SS}$

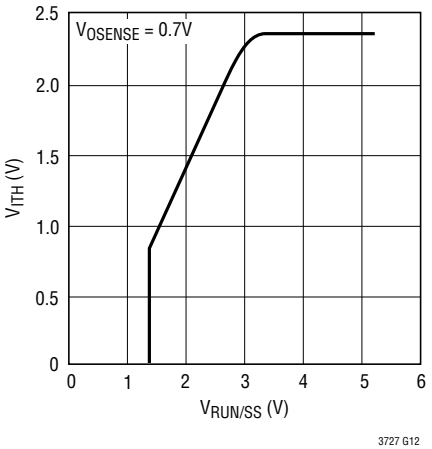

TYPICAL PERFORMANCE CHARACTERISTICS

SENSE Pins Total Source Current

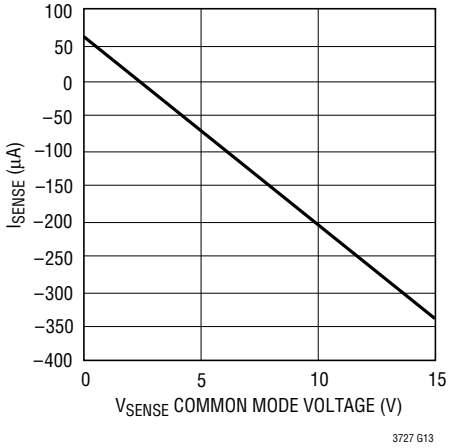

Dropout Voltage vs Output Current (Figure 13)

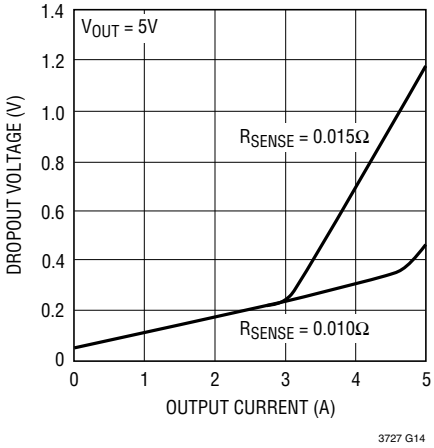

RUN/SS Current vs Temperature

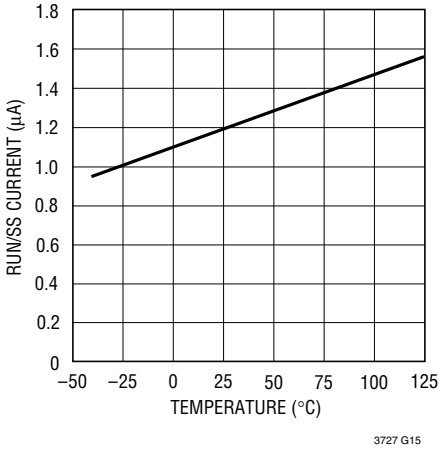

Soft-Start Up (Figure 12)

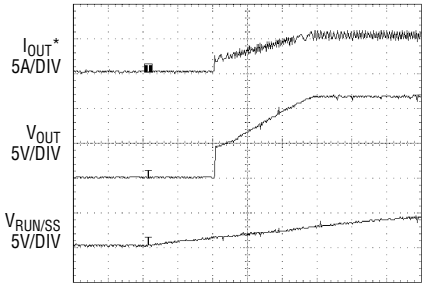

V_{IN} = 20V 50ms/DIV 3727 G16
V_{OUT} = 12V

Load Step (Figure 12)

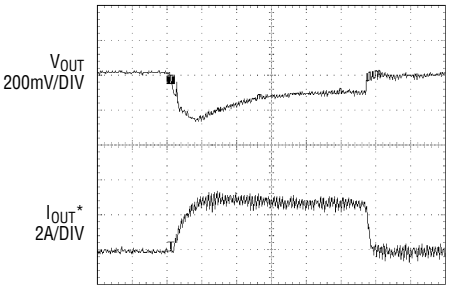

V_{IN} = 15V 50µs/DIV 3727 G17
V_{OUT} = 12V
LOAD STEP = 0A TO 3A
Burst Mode OPERATION

Load Step (Figure 12)

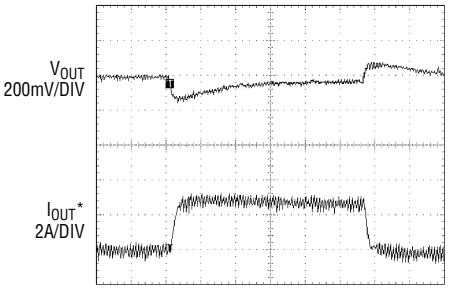

V_{IN} = 15V 50µs/DIV 3727 G18
V_{OUT} = 12V
LOAD STEP = 0A TO 3A
CONTINUOUS MODE

Input Source/Capacitor Instantaneous Current (Figure 12)

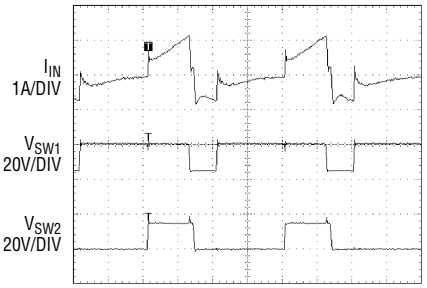

V_{IN} = 15V 1µs/DIV 3727 G19
V_{OUT1} = 12V
V_{OUT2} = 5V
I_{OUT1} = I_{OUT2} = 2A

Burst Mode Operation (Figure 12)

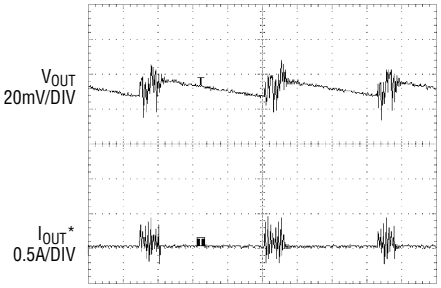

V_{IN} = 15V 50µs/DIV 3727 G20
V_{OUT} = 12V
V_{FCB} = OPEN
I_{OUT} = 20mA

Constant Frequency (Burst Inhibit) Operation (Figure 12)

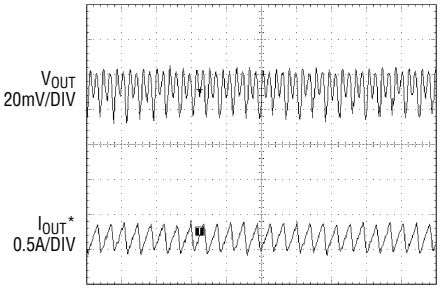

V_{IN} = 15V 5µs/DIV 3727 G21
V_{OUT} = 12V
V_{FCB} = 7.5V
I_{OUT} = 20mA

*I_{OUT} ⇒ INDUCTOR CURRENT

TYPICAL PERFORMANCE CHARACTERISTICS

Current Sense Pin Input Current vs Temperature

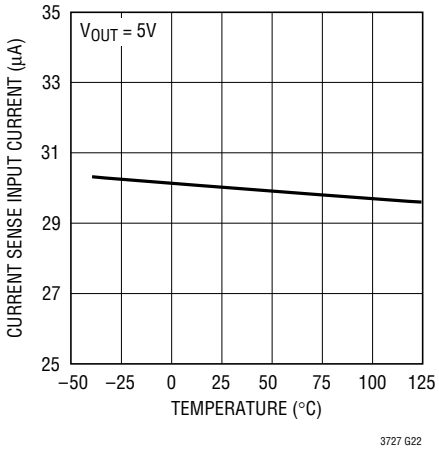

$EXTV_{CC}$ Switch Resistance vs Temperature

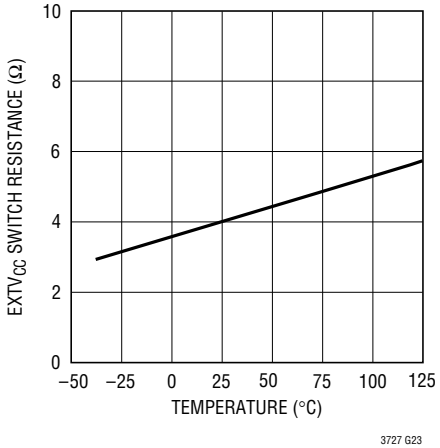

Oscillator Frequency vs Temperature

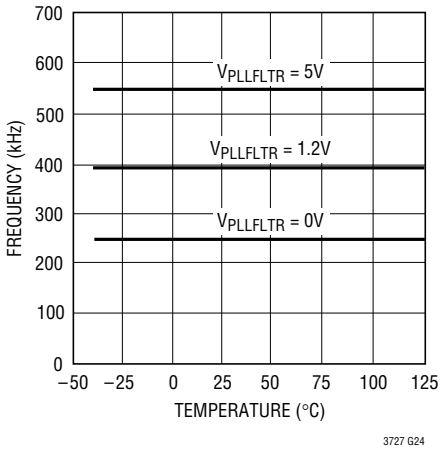

Undervoltage Lockout vs Temperature

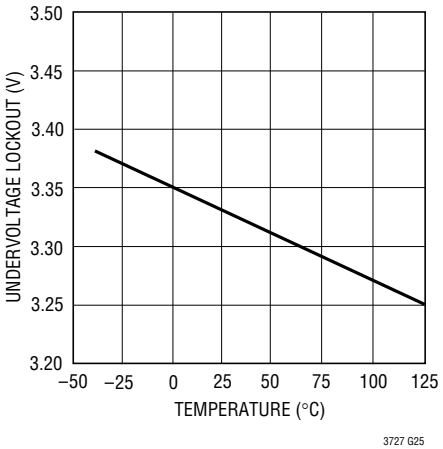

Shutdown Latch Thresholds vs Temperature

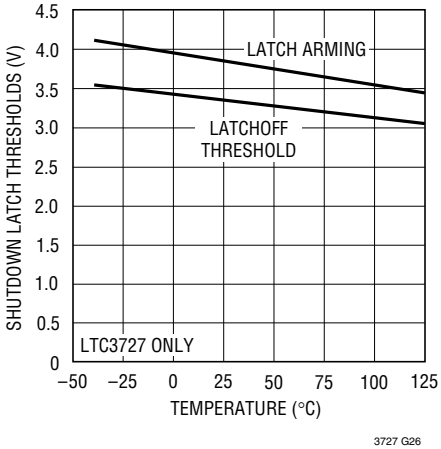

PIN FUNCTIONS G Package/UH Package

RUN/SS1, RUN/SS2 (Pins 1, 15/Pins 28, 13): Combination of Soft-Start, Run Control Inputs and Short-Circuit Detection Timers (LTC3727 only). A capacitor to ground at each of these pins sets the ramp time to full output current. Forcing either of these pins back below 1.0V causes the IC to shut down the circuitry required for that particular controller. Latchoff overcurrent protection is also invoked via this pin as described in the Applications Information section (LTC3727 only).

$SENSE1^+$, $SENSE2^+$ (Pins 2, 14/Pins 30, 12): The (+) Input to the Differential Current Comparators. The I_{TH} pin voltage and controlled offsets between the $SENSE^-$ and $SENSE^+$ pins in conjunction with R_{SENSE} set the current trip threshold.

$SENSE1^-$, $SENSE2^-$ (Pins 3, 13/Pins 31, 11): The (–) Input to the Differential Current Comparators.

$V_{OSENSE1}$, $V_{OSENSE2}$ (Pins 4, 12/Pins 1, 9): Receives the remotely-sensed feedback voltage for each controller from an external resistive divider across the output.

PIN FUNCTIONS

PLLFLTR (Pin 5/Pin 2): The phase-locked loop's lowpass filter is tied to this pin. Alternatively, this pin can be driven with an AC or DC voltage source to vary the frequency of the internal oscillator.

PLLIN (Pin 6/Pin 3): External Synchronization Input to Phase Detector. This pin is internally terminated to SGND with 50kΩ. The phase-locked loop will force the rising top gate signal of controller 1 to be synchronized with the rising edge of the PLLIN signal.

FCB (Pin 7/Pin 4): Forced Continuous Control Input. This input acts on both controllers and is normally used to regulate a secondary winding. Pulling this pin below 0.8V will force continuous synchronous operation. Do not leave this pin floating.

I_{TH1}, I_{TH2} (Pins 8, 11/Pins 5, 8): Error Amplifier Outputs and Switching Regulator Compensation Points. Each associated channels' current comparator trip point increases with this control voltage.

SGND (Pin 9/Pin 6): Small Signal Ground. Common to both controllers; must be routed separately from high current grounds to the common (–) terminals of the C_{OUT} capacitors.

$3.3V_{OUT}$ (Pin 10/Pin 7): Linear Regulator Output. Capable of supplying 10mA DC with peak currents as high as 50mA.

PGND (Pin 20/Pin 19): Driver Power Ground. Connects to the sources of bottom (synchronous) N-channel MOSFETs, anodes of the Schottky rectifiers and the (–) terminal(s) of C_{IN}.

$INTV_{CC}$ (Pin 21/Pin 20): Output of the Internal 7.5V Linear Low Dropout Regulator and the $EXTV_{CC}$ Switch. The driver and control circuits are powered from this voltage source. Must be decoupled to power ground with a minimum of 4.7μF tantalum or other low ESR capacitor.

$EXTV_{CC}$ (Pin 22/Pin 21): External Power Input to an Internal Switch Connected to $INTV_{CC}$. This switch closes and supplies V_{CC} power, bypassing the internal low dropout regulator, whenever $EXTV_{CC}$ is higher than 7.3V. See $EXTV_{CC}$ connection in Applications section. Do not exceed 8.5V on this pin.

BG1, BG2 (Pins 23, 19/Pins 22, 18): High Current Gate Drives for Bottom (Synchronous) N-Channel MOSFETs. Voltage swing at these pins is from ground to $INTV_{CC}$.

V_{IN} (Pin 24/Pin 23): Main Supply Pin. A bypass capacitor should be tied between this pin and the signal ground pin.

BOOST1, BOOST2 (Pins 25, 18/Pins 24, 17): Bootstrapped Supplies to the Top Side Floating Drivers. Capacitors are connected between the boost and switch pins and Schottky diodes are tied between the boost and $INTV_{CC}$ pins. Voltage swing at the boost pins is from $INTV_{CC}$ to (V_{IN} + $INTV_{CC}$).

SW1, SW2 (Pins 26, 17/Pins 25, 15): Switch Node Connections to Inductors. Voltage swing at these pins is from a Schottky diode (external) voltage drop below ground to V_{IN}.

TG1, TG2 (Pins 27, 16/Pins 26, 14): High Current Gate Drives for Top N-Channel MOSFETs. These are the outputs of floating drivers with a voltage swing equal to $INTV_{CC}$ – 0.5V superimposed on the switch node voltage SW.

PGOOD (Pin 28/Pin 27): Open-Drain Logic Output. PGOOD is pulled to ground when the voltage on either V_{OSENSE} pin is not within ±7.5% of its set point.

Exposed Pad (Pin 33, UH Package): Signal Ground. Must be soldered to the PCB ground for electrical contact and optimum thermal performance.

FUNCTIONAL DIAGRAM

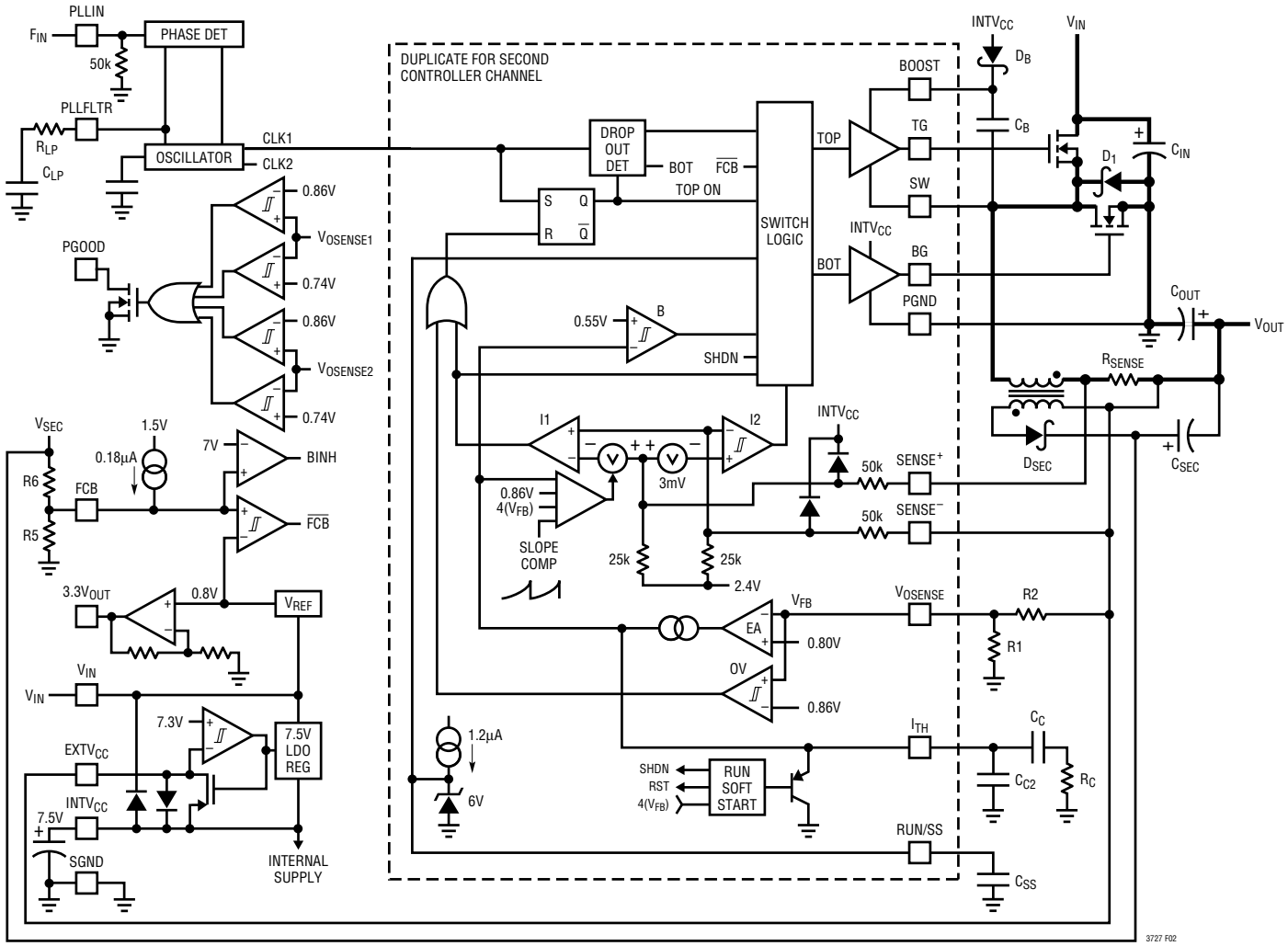

Figure 2

OPERATION (Refer to Functional Diagram)

Main Control Loop

The LTC3727/LTC3727-1 use a constant frequency, current mode step-down architecture with the two controller channels operating 180 degrees out of phase. During normal operation, each top MOSFET is turned on when the clock for that channel sets the RS latch, and turned off when the main current comparator, I_1, resets the RS latch. The peak inductor current at which I_1 resets the RS latch is controlled by the voltage on the I_{TH} pin, which is the output of each error amplifier EA. The V_{OSENSE} pin receives the voltage feedback signal, which is compared to the internal reference voltage by the EA. When the load current increases, it causes a slight decrease in V_{OSENSE} relative to the 0.8V reference, which in turn causes the I_{TH} voltage to increase until the average inductor current matches the new load current. After the top MOSFET has turned off, the bottom MOSFET is turned on until either the inductor current starts to reverse, as indicated by current comparator I_2, or the beginning of the next cycle.

OPERATION (Refer to Functional Diagram)

The top MOSFET drivers are biased from floating bootstrap capacitor C_B, which normally is recharged during each off cycle through an external diode when the top MOSFET turns off. As V_{IN} decreases to a voltage close to V_{OUT}, the loop may enter dropout and attempt to turn on the top MOSFET continuously. The dropout detector detects this and forces the top MOSFET off for about 400ns every tenth cycle to allow C_B to recharge.

The main control loop is shut down by pulling the RUN/SS pin low. Releasing RUN/SS allows an internal 1.2μA current source to charge soft-start capacitor C_{SS}. When C_{SS} reaches 1.5V, the main control loop is enabled with the I_{TH} voltage clamped at approximately 30% of its maximum value. As C_{SS} continues to charge, the I_{TH} pin voltage is gradually released allowing normal, full-current operation. When both RUN/SS1 and RUN/SS2 are low, all LTC3727/LTC3727-1 controller functions are shut down, including the 7.5V and 3.3V regulators.

Low Current Operation

The FCB pin is a multifunction pin providing two functions: 1) to provide regulation for a secondary winding by temporarily forcing continuous PWM operation on both controllers; and 2) to select between *two* modes of low current operation. When the FCB pin voltage is below 0.8V, the controller forces continuous PWM current mode operation. In this mode, the top and bottom MOSFETs are alternately turned on to maintain the output voltage independent of direction of inductor current. When the FCB pin is below V_{INTVCC} – 2V but greater than 0.8V, the controller enters Burst Mode operation. Burst Mode operation sets a minimum output current level before inhibiting the top switch and turns off the synchronous MOSFET(s) when the inductor current goes negative. This combination of requirements will, at low currents, force the I_{TH} pin below a voltage threshold that will temporarily inhibit turn-on of both output MOSFETs until the output voltage drops. There is 60mV of hysteresis in the burst comparator B tied to the I_{TH} pin. This hysteresis produces output signals to the MOSFETs that turn them on for several cycles, followed by a variable "sleep" interval depending upon the load current. The resultant output voltage ripple is held to a very small value by having the hysteretic comparator follow the error amplifier gain block.

Frequency Synchronization

The phase-locked loop allows the internal oscillator to be synchronized to an external source via the PLLIN pin. The output of the phase detector at the PLLFLTR pin is also the DC frequency control input of the oscillator that operates over a 250kHz to 550kHz range corresponding to a DC voltage input from 0V to 2.4V. When locked, the PLL aligns the turn on of the top MOSFET to the rising edge of the synchronizing signal. When PLLIN is left open, the PLLFLTR pin goes low, forcing the oscillator to its minimum frequency.

Continuous Current (PWM) Operation

Tying the FCB pin to ground will force continuous current operation. This is the least efficient operating mode, but may be desirable in certain applications. The output can source or sink current in this mode. When sinking current while in forced continuous operation, current will be forced back into the main power supply potentially boosting the input supply to dangerous voltage levels—BEWARE!

$INTV_{CC}/EXTV_{CC}$ Power

Power for the top and bottom MOSFET drivers and most other internal circuitry is derived from the $INTV_{CC}$ pin. When the $EXTV_{CC}$ pin is left open, an internal 7.5V low dropout linear regulator supplies $INTV_{CC}$ power. If $EXTV_{CC}$ is taken above 7.3V, the 7.5V regulator is turned off and an internal switch is turned on connecting $EXTV_{CC}$ to $INTV_{CC}$. This allows the $INTV_{CC}$ power to be derived from a high efficiency external source such as the output of the regulator itself or a secondary winding, as described in the Applications Information section.

Output Overvoltage Protection

An overvoltage comparator, OV, guards against transient overshoots (>7.5%) as well as other more serious conditions that may overvoltage the output. In this case, the top MOSFET is turned off and the bottom MOSFET is turned on until the overvoltage condition is cleared.

OPERATION (Refer to Functional Diagram)

Power Good (PGOOD) Pin

The PGOOD pin is connected to an open drain of an internal MOSFET. The MOSFET turns on and pulls the pin low when either output is not within ±7.5% of the nominal output level as determined by the resistive feedback divider. When both outputs meet the ±7.5% requirement, the MOSFET is turned off within 10μs and the pin is allowed to be pulled up by an external resistor to a source of up to 7V.

Foldback Current, Short-Circuit Detection and Short-Circuit Latchoff (LTC3727 Only)

The RUN/SS capacitors are used initially to limit the inrush current of each switching regulator. After the controller has been started and been given adequate time to charge up the output capacitors and provide full load current, the RUN/SS capacitor is used in a short-circuit time-out circuit. If the output voltage falls to less than 70% of its nominal output voltage, the RUN/SS capacitor begins discharging on the assumption that the output is in an overcurrent and/or short-circuit condition. If the condition lasts for a long enough period as determined by the size of the RUN/SS capacitor, the controller will be shut down until the RUN/SS pin(s) voltage(s) are recycled. This built-in latchoff can be overridden by providing a >5μA pull-up at a compliance of 5V to the RUN/SS pin(s). This current shortens the soft start period but also prevents net discharge of the RUN/SS capacitor(s) during an overcurrent and/or short-circuit condition. Foldback current limiting is also activated when the output voltage falls below 70% of its nominal level whether or not the short-circuit latchoff circuit is enabled. Even if a short is present and the short-circuit latchoff is not enabled, a safe, low output current is provided due to internal current foldback and actual power wasted is low due to the efficient nature of the current mode switching regulator.

PART NUMBER	FUNCTION
LTC3727	With Latchoff Function Available
LTC3727-1	Latchoff Always Disabled

THEORY AND BENEFITS OF 2-PHASE OPERATION

The LTC3727 dual high efficiency DC/DC controller brings the considerable benefits of 2-phase operation to portable applications. Notebook computers, PDAs, handheld terminals and automotive electronics will all benefit from the lower input filtering requirement, reduced electromagnetic interference (EMI) and increased efficiency associated with 2-phase operation.

Why the need for 2-phase operation? Until recently, constant-frequency dual switching regulators operated both channels in phase (i.e., single-phase operation). This means that both switches turned on at the same time, causing current pulses of up to twice the amplitude of those for one regulator to be drawn from the input capacitor and battery. These large amplitude current pulses increased the total RMS current flowing from the input capacitor, requiring the use of more expensive input capacitors and increasing both EMI and losses in the input capacitor and battery.

With 2-phase operation, the two channels of the dual-switching regulator are operated 180 degrees out of phase. This effectively interleaves the current pulses drawn by the switches, greatly reducing the overlap time where they add together. *The result is a significant reduction in total RMS input current, which in turn allows less expensive input capacitors to be used, reduces shielding requirements for EMI and improves real world operating efficiency.*

Figure 3 compares the input waveforms for a representative single-phase dual switching regulator to the new LTC3727 2-phase dual switching regulator. An actual measurement of the RMS input current under these conditions shows that 2-phase operation dropped the input current from $2.53A_{RMS}$ to $1.55A_{RMS}$. While this is an impressive reduction in itself, remember that the power losses are proportional to I_{RMS}^2, meaning that the actual power wasted is reduced by a factor of 2.66. The reduced input ripple voltage also means less power is lost in the

OPERATION (Refer to Functional Diagram)

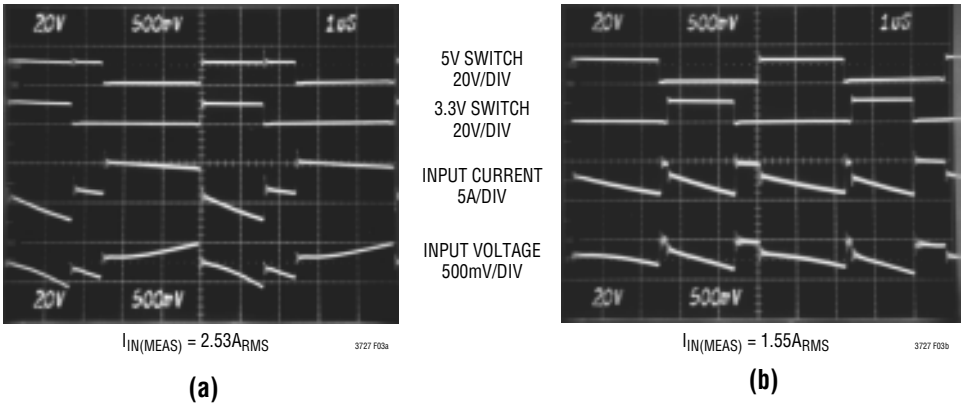

Figure 3. Input Waveforms Comparing Single-Phase (a) and 2-Phase (b) Operation for Dual Switching Regulators Converting 12V to 5V and 3.3V at 3A Each. The Reduced Input Ripple with the LTC3727 2-Phase Regulator Allows Less Expensive Input Capacitors, Reduces Shielding Requirements for EMI and Improves Efficiency

input power path, which could include batteries, switches, trace/connector resistances and protection circuitry. Improvements in both conducted and radiated EMI also directly accrue as a result of the reduced RMS input current and voltage.

Of course, the improvement afforded by 2-phase operation is a function of the dual switching regulator's relative duty cycles which, in turn, are dependent upon the input voltage V_{IN} (Duty Cycle = V_{OUT}/V_{IN}). Figure 4 shows how the RMS input current varies for single-phase and 2-phase operation for 3.3V and 5V regulators over a wide input voltage range.

It can readily be seen that the advantages of 2-phase operation are not just limited to a narrow operating range, but in fact extend over a wide region. A good rule of thumb for most applications is that 2-phase operation will reduce the input capacitor requirement to that for just one channel operating at maximum current and 50% duty cycle.

A final question: If 2-phase operation offers such an advantage over single-phase operation for dual switching regulators, why hasn't it been done before? The answer is that, while simple in concept, it is hard to implement. Constant-frequency current mode switching regulators require an oscillator derived "slope compensation" signal to allow stable operation of each regulator at over 50% duty cycle. This signal is relatively easy to derive in single-phase dual switching regulators, but required the development of a new and proprietary technique to allow 2-phase operation. In addition, isolation between the two channels becomes more critical with 2-phase operation because switch transitions in one channel could potentially disrupt the operation of the other channel.

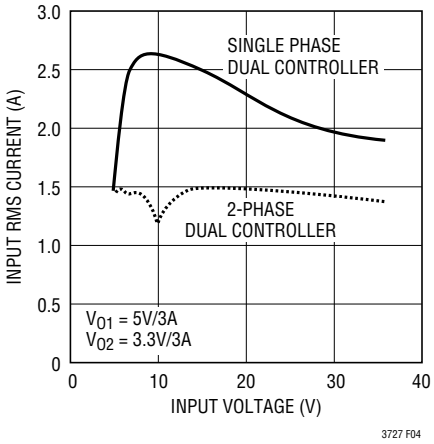

Figure 4. RMS Input Current Comparison

APPLICATIONS INFORMATION

Figure 1 on the first page is a basic LTC3727/LTC3727-1 application circuit. External component selection is driven by the load requirement, and begins with the selection of R_{SENSE} and the inductor value. Next, the power MOSFETs and D1 are selected. Finally, C_{IN} and C_{OUT} are selected. The circuit shown in Figure 1 can be configured for operation up to an input voltage of 28V (limited by the external MOSFETs).

R_{SENSE} Selection For Output Current

R_{SENSE} is chosen based on the required output current. The LTC3727 current comparator has a maximum threshold of 135mV/R_{SENSE} and an input common mode range of SGND to 14V. The current comparator threshold sets the peak of the inductor current, yielding a maximum average output current I_{MAX} equal to the peak value less half the peak-to-peak ripple current, ΔI_L.

Allowing a margin for variations in the LTC3727 and external component values yields:

$$R_{SENSE} = \frac{90mV}{I_{MAX}}$$

When using the controller in very low dropout conditions, the maximum output current level will be reduced due to the internal compensation required to meet stability criterion for buck regulators operating at greater than 50% duty factor. A curve is provided to estimate this reducton in peak output current level depending upon the operating duty factor.

Operating Frequency

The LTC3727 uses a constant frequency phase-lockable architecture with the frequency determined by an internal capacitor. This capacitor is charged by a fixed current plus an additional current which is proportional to the voltage applied to the PLLFLTR pin. Refer to Phase-Locked Loop and Frequency Synchronization in the Applications Information section for additional information.

A graph for the voltage applied to the PLLFLTR pin vs frequency is given in Figure 5. As the operating frequency is increased the gate charge losses will be higher, reducing efficiency (see Efficiency Considerations). The maximum switching frequency is approximately 550kHz.

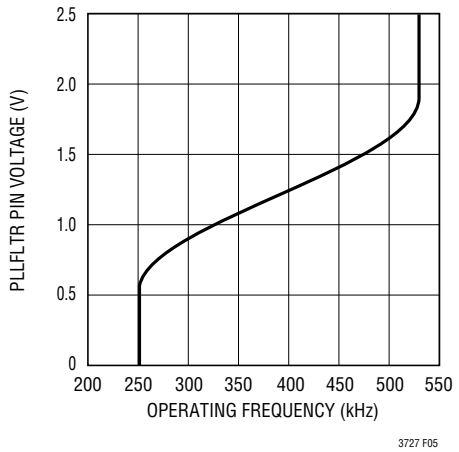

Figure 5. PLLFLTR Pin Voltage vs Frequency

Inductor Value Calculation

The operating frequency and inductor selection are interrelated in that higher operating frequencies allow the use of smaller inductor and capacitor values. So why would anyone ever choose to operate at lower frequencies with larger components? The answer is efficiency. A higher frequency generally results in lower efficiency because of MOSFET gate charge losses. In addition to this basic trade-off, the effect of inductor value on ripple current and low current operation must also be considered.

The inductor value has a direct effect on ripple current. The inductor ripple current ΔI_L decreases with higher inductance or frequency and increases with higher V_{IN}:

$$\Delta I_L = \frac{1}{(f)(L)} V_{OUT}\left(1 - \frac{V_{OUT}}{V_{IN}}\right)$$

Accepting larger values of ΔI_L allows the use of low inductances, but results in higher output voltage ripple and greater core losses. A reasonable starting point for setting ripple current is $\Delta I_L = 0.3(I_{MAX})$. The maximum ΔI_L occurs at the maximum input voltage.

APPLICATIONS INFORMATION

The inductor value also has secondary effects. The transition to Burst Mode operation begins when the average inductor current required results in a peak current below 25% of the current limit determined by R_{SENSE}. Lower inductor values (higher ΔI_L) will cause this to occur at lower load currents, which can cause a dip in efficiency in the upper range of low current operation. In Burst Mode operation, lower inductance values will cause the burst frequency to decrease.

Inductor Core Selection

Once the inductance value is determined, the type of inductor must be selected. Actual core loss is independent of core size for a fixed inductor value, but it is very dependent on inductance selected. As inductance increases, core losses go down. Unfortunately, increased inductance requires more turns of wire and therefore copper (I^2R) losses will increase.

Ferrite designs have very low core loss and are preferred at high switching frequencies, so designers can concentrate on reducing I^2R loss and preventing saturation. Ferrite core material saturates "hard," which means that inductance collapses abruptly when the peak design current is exceeded. This results in an abrupt increase in inductor ripple current and consequent output voltage ripple. Do not allow the core to saturate!

Different core materials and shapes will change the size/current and price/current relationship of an inductor. Toroid or shielded pot cores in ferrite or permalloy materials are small and don't radiate much energy, but generally cost more than powdered iron core inductors with similar characteristics. The choice of which style inductor to use mainly depends on the price vs size requirements and any radiated field/EMI requirements. New designs for high current surface mount inductors are available from numerous manufacturers, including Coiltronics, Vishay, TDK, Pulse, Panasonic, Wuerth, Coilcraft, Toko and Sumida.

Power MOSFET and D1 Selection

Two external power MOSFETs must be selected for each controller in the LTC3727: One N-channel MOSFET for the top (main) switch, and one N-channel MOSFET for the bottom (synchronous) switch.

The peak-to-peak drive levels are set by the $INTV_{CC}$ voltage. This voltage is typically 7.5V during start-up (see $EXTV_{CC}$ Pin Connection). Consequently, logic-level threshold MOSFETs must be used in most applications. The only exception is if low input voltage is expected (V_{IN} < 5V); then, sub-logic level threshold MOSFETs ($V_{GS(TH)}$ < 3V) should be used. Pay close attention to the BV_{DSS} specification for the MOSFETs as well; most of the logic level MOSFETs are limited to 30V or less.

Selection criteria for the power MOSFETs include the "ON" resistance $R_{DS(ON)}$, reverse transfer capacitance C_{RSS}, input voltage and maximum output current. When the LTC3727 is operating in continuous mode the duty cycles for the top and bottom MOSFETs are given by:

$$\text{Main Switch Duty Cycle} = \frac{V_{OUT}}{V_{IN}}$$

$$\text{Synchronous Switch Duty Cycle} = \frac{V_{IN} - V_{OUT}}{V_{IN}}$$

The MOSFET power dissipations at maximum output current are given by:

$$P_{MAIN} = \frac{V_{OUT}}{V_{IN}}(I_{MAX})^2(1+\delta)R_{DS(ON)} + k(V_{IN})^2(I_{MAX})(C_{RSS})(f)$$

$$P_{SYNC} = \frac{V_{IN} - V_{OUT}}{V_{IN}}(I_{MAX})^2(1+\delta)R_{DS(ON)}$$

where δ is the temperature dependency of $R_{DS(ON)}$ and k is a constant inversely related to the gate drive current.

Both MOSFETs have I^2R losses while the topside N-channel equation includes an additional term for transition losses, which are highest at high input voltages. For V_{IN} < 20V the high current efficiency generally improves with larger MOSFETs, while for V_{IN} > 20V the transition losses rapidly increase to the point that the use of a higher $R_{DS(ON)}$ device with lower C_{RSS} actually provides higher efficiency. The synchronous MOSFET losses are greatest at high input voltage when the top switch duty factor is low or during a

APPLICATIONS INFORMATION

short-circuit when the synchronous switch is on close to 100% of the period.

The term (1+δ) is generally given for a MOSFET in the form of a normalized $R_{DS(ON)}$ vs Temperature curve, but δ = 0.005/°C can be used as an approximation for low voltage MOSFETs. C_{RSS} is usually specified in the MOSFET characteristics. The constant k = 1.7 can be used to estimate the contributions of the two terms in the main switch dissipation equation.

The Schottky diode D1 shown in Figure 2 conducts during the dead-time between the conduction of the two power MOSFETs. This prevents the body diode of the bottom MOSFET from turning on, storing charge during the dead-time and requiring a reverse recovery period that could cost as much as 3% in efficiency at high V_{IN}. A 1A to 3A Schottky is generally a good compromise for both regions of operation due to the relatively small average current. Larger diodes result in additional transition losses due to their larger junction capacitance. Schottky diodes should be placed in parallel with the synchronous MOSFETs when operating in pulse-skip mode or in Burst Mode operation.

C_{IN} and C_{OUT} Selection

The selection of C_{IN} is simplified by the multiphase architecture and its impact on the worst-case RMS current drawn through the input network (battery/fuse/capacitor). It can be shown that the worst case RMS current occurs when only one controller is operating. The controller with the highest $(V_{OUT})(I_{OUT})$ product needs to be used in the formula below to determine the maximum RMS current requirement. Increasing the output current, drawn from the other out-of-phase controller, will actually decrease the input RMS ripple current from this maximum value (see Figure 4). The out-of-phase technique typically reduces the input capacitor's RMS ripple current by a factor of 30% to 70% when compared to a single phase power supply solution.

The type of input capacitor, value and ESR rating have efficiency effects that need to be considered in the selection process. The capacitance value chosen should be sufficient to store adequate charge to keep high peak battery currents down. 22μF to 47μF is usually sufficient for a 25W output supply operating at 250kHz. The ESR of the capacitor is important for capacitor power dissipation as well as overall battery efficiency. All of the power (RMS ripple current • ESR) not only heats up the capacitor but wastes power from the battery.

Medium voltage (20V to 35V) ceramic, tantalum, OS-CON and switcher-rated electrolytic capacitors can be used as input capacitors, but each has drawbacks: ceramic voltage coefficients are very high and may have audible piezoelectric effects; tantalums need to be surge-rated; OS-CONs suffer from higher inductance, larger case size and limited surface-mount applicability; electrolytics' higher ESR and dryout possibility require several to be used. Multiphase systems allow the lowest amount of capacitance overall. As little as one 22μF or two to three 10μF ceramic capacitors are an ideal choice in a 20W to 35W power supply due to their extremely low ESR. Even though the capacitance at 20V is substantially below their rating at zero-bias, very low ESR loss makes ceramics an ideal candidate for highest efficiency battery operated systems. Also consider parallel ceramic and high quality electrolytic capacitors as an effective means of achieving ESR and bulk capacitance goals.

In continuous mode, the source current of the top N-channel MOSFET is a square wave of duty cycle V_{OUT}/V_{IN}. To prevent large voltage transients, a low ESR input capacitor sized for the maximum RMS current of one channel must be used. The maximum RMS capacitor current is given by:

$$C_{IN}\,\text{Required}\,I_{RMS} \cong I_{MAX}\frac{\left[V_{OUT}\left(V_{IN}-V_{OUT}\right)\right]^{1/2}}{V_{IN}}$$

This formula has a maximum at $V_{IN} = 2V_{OUT}$, where $I_{RMS} = I_{OUT}/2$. This simple worst case condition is commonly used for design because even significant deviations do not offer much relief. Note that capacitor manufacturer's ripple current ratings are often based on only 2000 hours of life. This makes it advisable to further derate the capacitor, or to choose a capacitor rated at a higher temperature than required. Several capacitors may also be paralleled to meet size or height requirements in the design. Always consult the manufacturer if there is any question.

APPLICATIONS INFORMATION

The benefit of the LTC3727 multiphase can be calculated by using the equation above for the higher power controller and then calculating the loss that would have resulted if both controller channels switch on at the same time. The total RMS power lost is lower when both controllers are operating due to the interleaving of current pulses through the input capacitor's ESR. This is why the input capacitor's requirement calculated above for the worst-case controller is adequate for the dual controller design. Remember that input protection fuse resistance, battery resistance and PC board trace resistance losses are also reduced due to the reduced peak currents in a multiphase system. *The overall benefit of a multiphase design will only be fully realized when the source impedance of the power supply/battery is included in the efficiency testing.* The drains of the two top MOSFETS should be placed within 1cm of each other and share a common C_{IN}(s). Separating the drains and C_{IN} may produce undesirable voltage and current resonances at V_{IN}.

The selection of C_{OUT} is driven by the required effective series resistance (ESR). Typically once the ESR requirement is satisfied the capacitance is adequate for filtering. The output ripple (ΔV_{OUT}) is determined by:

$$\Delta V_{OUT} \cong \Delta I_L \left(ESR + \frac{1}{8fC_{OUT}} \right)$$

Where f = operating frequency, C_{OUT} = output capacitance, and ΔI_L= ripple current in the inductor. The output ripple is highest at maximum input voltage since ΔI_L increases with input voltage. With $\Delta I_L = 0.3I_{OUT(MAX)}$ the output ripple will typically be less than 50mV at max V_{IN} assuming:

C_{OUT} Recommended ESR < 2 R_{SENSE}

and $C_{OUT} > 1/(8fR_{SENSE})$

The first condition relates to the ripple current into the ESR of the output capacitance while the second term guarantees that the output capacitance does not significantly discharge during the operating frequency period due to ripple current. The choice of using smaller output capacitance increases the ripple voltage due to the discharging term but can be compensated for by using capacitors of very low ESR to maintain the ripple voltage at or below 50mV. The I_{TH} pin OPTI-LOOP compensation components can be optimized to provide stable, high performance transient response regardless of the output capacitors selected.

Manufacturers such as Nichicon, Nippon Chemi-Con and Sanyo can be considered for high performance through-hole capacitors. The OS-CON semiconductor dielectric capacitor available from Sanyo has the lowest (ESR)(size) product of any aluminum electrolytic at a somewhat higher price. An additional ceramic capacitor in parallel with OS-CON capacitors is recommended to reduce the inductance effects.

In surface mount applications multiple capacitors may need to be used in parallel to meet the ESR, RMS current handling and load step requirements of the application. Aluminum electrolytic, dry tantalum and special polymer capacitors are available in surface mount packages. Special polymer surface mount capacitors offer very low ESR but have lower storage capacity per unit volume than other capacitor types. These capacitors offer a very cost-effective output capacitor solution and are an ideal choice when combined with a controller having high loop bandwidth. Tantalum capacitors offer the highest capacitance density and are often used as output capacitors for switching regulators having controlled soft-start. Several excellent surge-tested choices are the AVX TPS, AVX TPS Series III or the KEMET T510 series of surface mount tantalums, available in case heights ranging from 1.2mm to 4.1mm. Aluminum electrolytic capacitors can be used in cost-driven applications providing that consideration is given to ripple current ratings, temperature and long term reliability. A typical application will require several to many aluminum electrolytic capacitors in parallel. A combination of the above mentioned capacitors will often result in maximizing performance and minimizing overall cost. Other capacitor types include Nichicon PL series, NEC Neocap, Cornell Dubilier ESRE and Sprague 595D series. Consult manufacturers for other specific recommendations.

APPLICATIONS INFORMATION

$INTV_{CC}$ Regulator

An internal P-channel low dropout regulator produces 7.5V at the $INTV_{CC}$ pin from the V_{IN} supply pin. $INTV_{CC}$ powers the drivers and internal circuitry within the LTC3727. The $INTV_{CC}$ pin regulator can supply a peak current of 50mA and must be bypassed to ground with a minimum of 4.7µF tantalum, 10µF special polymer, or low ESR type electrolytic capacitor. A 1µF ceramic capacitor placed directly adjacent to the $INTV_{CC}$ and PGND IC pins is highly recommended. Good bypassing is necessary to supply the high transient currents required by the MOSFET gate drivers and to prevent interaction between channels.

Higher input voltage applications in which large MOSFETs are being driven at high frequencies may cause the maximum junction temperature rating for the LTC3727 to be exceeded. The system supply current is normally dominated by the gate charge current. Additional external loading of the $INTV_{CC}$ and 3.3V linear regulators also needs to be taken into account for the power dissipation calculations. The total $INTV_{CC}$ current can be supplied by either the 7.5V internal linear regulator or by the $EXTV_{CC}$ input pin. When the voltage applied to the $EXTV_{CC}$ pin is less than 7.3V, all of the $INTV_{CC}$ current is supplied by the internal 7.5V linear regulator. Power dissipation for the IC in this case is highest: $(V_{IN})(I_{INTVCC})$, and overall efficiency is lowered. The gate charge current is dependent on operating frequency as discussed in the Efficiency Considerations section. The junction temperature can be estimated by using the equations given in Note 2 of the Electrical Characteristics. For example, the LTC3727 V_{IN} current is limited to less than 24mA from a 24V supply when not using the $EXTV_{CC}$ pin as follows:

$$T_J = 70°C + (24mA)(24V)(95°C/W) = 125°C$$

Use of the $EXTV_{CC}$ input pin reduces the junction temperature to:

$$T_J = 70°C + (24mA)(7.5V)(95°C/W) = 87°C$$

Dissipation should be calculated to also include any added current drawn from the internal 3.3V linear regulator. To prevent maximum junction temperature from being exceeded, the input supply current must be checked operating in continuous mode at maximum V_{IN}.

$EXTV_{CC}$ Connection

The LTC3727 contains an internal P-channel MOSFET switch connected between the $EXTV_{CC}$ and $INTV_{CC}$ pins. When the voltage applied to $EXTV_{CC}$ rises above 7.3V, the internal regulator is turned off and the switch closes, connecting the $EXTV_{CC}$ pin to the $INTV_{CC}$ pin thereby supplying internal power. The switch remains closed as long as the voltage applied to $EXTV_{CC}$ remains above 7.0V. This allows the MOSFET driver and control power to be derived from the output during normal operation ($7.2V < V_{OUT} < 8.5V$) and from the internal regulator when the output is out of regulation (start-up, short-circuit). If more current is required through the $EXTV_{CC}$ switch than is specified, an external Schottky diode can be added between the $EXTV_{CC}$ and $INTV_{CC}$ pins. Do not apply greater than 8.5V to the $EXTV_{CC}$ pin and ensure that $EXTV_{CC} \leq V_{IN}$.

Significant efficiency gains can be realized by powering $INTV_{CC}$ from the output, since the V_{IN} current resulting from the driver and control currents will be scaled by a factor of (Duty Cycle)/(Efficiency). For 7.5V regulators this supply means connecting the $EXTV_{CC}$ pin directly to V_{OUT}. However, for 3.3V and other lower voltage regulators, additional circuitry is required to derive $INTV_{CC}$ power from the output.

The following list summarizes the four possible connections for $EXTV_{CC}$:

1. $EXTV_{CC}$ Left Open (or Grounded). This will cause $INTV_{CC}$ to be powered from the internal 7.5V regulator resulting in an efficiency penalty of up to 10% at high input voltages.

2. $EXTV_{CC}$ Connected directly to V_{OUT}. This is the normal connection for a 7.5V regulator and provides the highest efficiency.

3. $EXTV_{CC}$ Connected to an External supply. If an external supply is available in the 7.5V to 8.5V range, it may be used to power $EXTV_{CC}$ providing it is compatible with the MOSFET gate drive requirements.

4. $EXTV_{CC}$ Connected to an Output-Derived Boost Network. For 3.3V and other low voltage regulators, efficiency gains can still be realized by connecting $EXTV_{CC}$ to an output-derived voltage that has been boosted to greater

APPLICATIONS INFORMATION

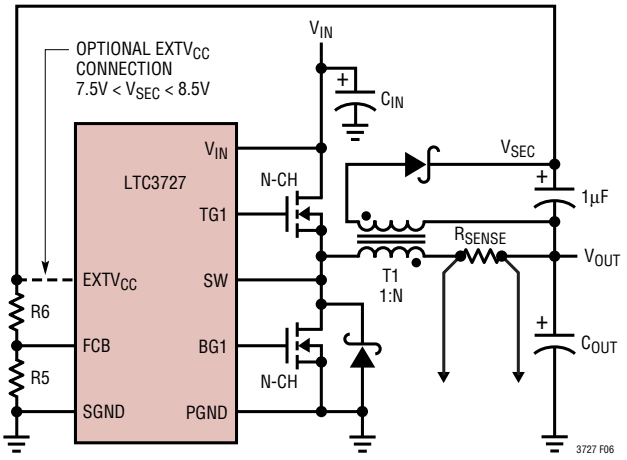

Figure 6. Secondary Output Loop & $EXTV_{CC}$ Connection

than 7.5V. This can be done with the inductive boost winding as shown in Figure 6.

Topside MOSFET Driver Supply (C_B, D_B)

External bootstrap capacitors C_B connected to the BOOST pins supply the gate drive voltages for the topside MOSFETs. Capacitor C_B in the functional diagram is charged though external diode D_B from $INTV_{CC}$ when the SW pin is low. When one of the topside MOSFETs is to be turned on, the driver places the C_B voltage across the gate-source of the desired MOSFET. This enhances the MOSFET and turns on the topside switch. The switch node voltage, SW, rises to V_{IN} and the BOOST pin follows. With the topside MOSFET on, the boost voltage is above the input supply: $V_{BOOST} = V_{IN} + V_{INTVCC}$. The value of the boost capacitor C_B needs to be 100 times that of the total input capacitance of the topside MOSFET(s). The reverse breakdown of the external Schottky diode must be greater than $V_{IN(MAX)}$. When adjusting the gate drive level, the final arbiter is the total input current for the regulator. If a change is made and the input current decreases, then the efficiency has improved. If there is no change in input current, then there is no change in efficiency.

Output Voltage

The LTC3727 output voltages are each set by an external feedback resistive divider carefully placed across the output capacitor. The resultant feedback signal is compared with the internal precision 0.800V voltage reference by the error amplifier. The output voltage is given by the equation:

$$V_{OUT} = 0.8V\left(1+\frac{R2}{R1}\right)$$

where R1 and R2 are defined in Figure 2.

$SENSE^+/SENSE^-$ Pins

The common mode input range of the current comparator sense pins is from 0V to 14V. Continuous linear operation is guaranteed throughout this range allowing output voltage setting from 0.8V to 14V. A differential NPN input stage is biased with internal resistors from an internal 2.4V source as shown in the Functional Diagram. This requires that current either be sourced or sunk from the SENSE pins depending on the output voltage. If the output voltage is below 2.4V current will flow out of both SENSE pins to the main output. The output can be easily preloaded by the V_{OUT} resistive divider to compensate for the current comparator's negative input bias current. The maximum current flowing out of each pair of SENSE pins is:

$$I_{SENSE}^+ + I_{SENSE}^- = (2.4V - V_{OUT})/24k$$

Since V_{OSENSE} is servoed to the 0.8V reference voltage, we can choose R1 in Figure 2 to have a maximum value to absorb this current.

$$R1_{(MAX)} = 24k\left(\frac{0.8V}{2.4V - V_{OUT}}\right)$$

for $V_{OUT} < 2.4V$

APPLICATIONS INFORMATION

Regulating an output voltage of 1.8V, the maximum value of R1 should be 32K. Note that for an output voltage above 2.4V, R1 has no maximum value necessary to absorb the sense currents; however, R1 is still bounded by the V_{OSENSE} feedback current.

Soft-Start/Run Function

The RUN/SS1 and RUN/SS2 pins are multipurpose pins that provide a soft-start function and a means to shut down the LTC3727. Soft-start reduces the input power source's surge currents by gradually increasing the controller's current limit (proportional to V_{ITH}). This pin can also be used for power supply sequencing.

An internal 1.2µA current source charges up the C_{SS} capacitor. When the voltage on RUN/SS1 (RUN/SS2) reaches 1.5V, the particular controller is permitted to start operating. As the voltage on RUN/SS increases from 1.5V to 3.0V, the internal current limit is increased from 45mV/R_{SENSE} to 135mV/R_{SENSE}. The output current limit ramps up slowly, taking an additional 1.25s/µF to reach full current. The output current thus ramps up slowly, reducing the starting surge current required from the input power supply. If RUN/SS has been pulled all the way to ground there is a delay before starting of approximately:

$$t_{DELAY} = \frac{1.5V}{1.2\mu A} C_{SS} = (1.25s/\mu F) C_{SS}$$

$$t_{IRAMP} = \frac{3V - 1.5V}{1.2\mu A} C_{SS} = (1.25s/\mu F) C_{SS}$$

By pulling both RUN/SS pins below 1V, the LTC3727 is put into low current shutdown (I_Q = 20µA). The RUN/SS pins can be driven directly from logic as shown in Figure 7. Diode D1 in Figure 7 reduces the start delay but allows C_{SS} to ramp up slowly providing the soft-start function. Each RUN/SS pin has an internal 6V zener clamp (See Functional Diagram).

Fault Conditions: Overcurrent Latchoff (LTC3727 Only)

The RUN/SS pins also provide the ability to latch off the controller(s) when an overcurrent condition is detected.

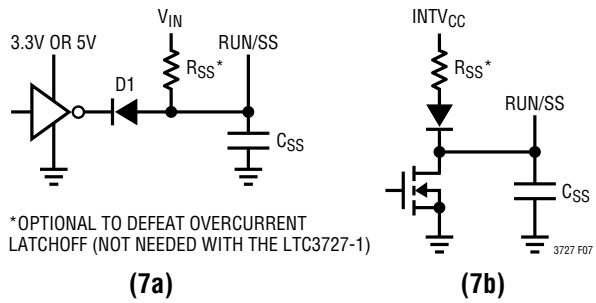

Figure 7. RUN/SS Pin Interfacing

The RUN/SS capacitor, C_{SS}, is used initially to turn on and limit the inrush current. After the controller has been started and been given adequate time to charge up the output capacitor and provide full load current, the RUN/SS capacitor is used for a short-circuit timer. If the regulator's output voltage falls to less than 70% of its nominal value after C_{SS} reaches 4.1V, C_{SS} begins discharging on the assumption that the output is in an overcurrent condition. If the condition lasts for a long enough period as determined by the size of the C_{SS} and the specified discharge current, the controller will be shut down until the RUN/SS pin voltage is recycled. If the overload occurs during start-up, the time can be approximated by:

$$t_{LO1} \cong [C_{SS}(4.1 - 1.5 + 4.1 - 3.5)]/(1.2\mu A)$$
$$= 2.7 \bullet 10^6 (C_{SS})$$

If the overload occurs after start-up the voltage on C_{SS} will begin discharging from the zener clamp voltage:

$$t_{LO2} \cong [C_{SS}(6 - 3.5)]/(1.2\mu A) = 2.1 \bullet 10^6 (C_{SS})$$

This built-in overcurrent latchoff can be overridden by providing a pull-up resistor to the RUN/SS pin as shown in Figure 7. This resistance shortens the soft-start period and prevents the discharge of the RUN/SS capacitor during an over current condition. Tying this pull-up resistor to V_{IN}, as in Figure 7a, defeats overcurrent latchoff. Diode-connecting this pull-up resistor to $INTV_{CC}$, as in Figure 7b, eliminates any extra supply current during controller shutdown while eliminating the $INTV_{CC}$ loading from preventing controller start-up. This pull-up resistor is not needed in LTC3727-1 designs.

APPLICATIONS INFORMATION

Why should you defeat overcurrent latchoff? During the prototyping stage of a design, there may be a problem with noise pickup or poor layout causing the protection circuit to latch off. Defeating this feature will easily allow troubleshooting of the circuit and PC layout. The internal short-circuit and foldback current limiting still remains active, thereby protecting the power supply system from failure. After the design is complete, a decision can be made whether to enable the latchoff feature. If latchoff is not required, the LTC3727-1 can be used.

The value of the soft-start capacitor C_{SS} may need to be scaled with output voltage, output capacitance and load current characteristics. The minimum soft-start capacitance is given by:

$$C_{SS} > (C_{OUT})(V_{OUT})(10^{-4})(R_{SENSE})$$

The minimum recommended soft-start capacitor of $C_{SS} = 0.1\mu F$ will be sufficient for most applications.

Fault Conditions: Current Limit and Current Foldback

The LTC3727 current comparator has a maximum sense voltage of 135mV resulting in a maximum MOSFET current of $135mV/R_{SENSE}$. The maximum value of current limit generally occurs with the largest V_{IN} at the highest ambient temperature, conditions that cause the highest power dissipation in the top MOSFET.

The LTC3727 includes current foldback to help further limit load current when the output is shorted to ground. The foldback circuit is active even when the overload shutdown latch described above is overridden. If the output falls below 70% of its nominal output level, then the maximum sense voltage is progressively lowered from 135mV to 45mV. Under short-circuit conditions with very low duty cycles, the LTC3727 will begin cycle skipping in order to limit the short-circuit current. In this situation the bottom MOSFET will be dissipating most of the power but less than in normal operation. The short-circuit ripple current is determined by the minimum on-time $t_{ON(MIN)}$ of the LTC3727 (less than 200ns), the input voltage and inductor value:

$$\Delta I_{L(SC)} = t_{ON(MIN)}(V_{IN}/L)$$

The resulting short-circuit current is:

$$I_{SC} = \frac{45mV}{R_{SENSE}} + \frac{1}{2}\Delta I_{L(SC)}$$

Fault Conditions: Overvoltage Protection (Crowbar)

The overvoltage crowbar is designed to blow a system input fuse when the output voltage of the regulator rises much higher than nominal levels. The crowbar causes huge currents to flow, that blow the fuse to protect against a shorted top MOSFET if the short occurs while the controller is operating.

A comparator monitors the output for overvoltage conditions. The comparator (OV) detects overvoltage faults greater than 7.5% above the nominal output voltage. When this condition is sensed, the top MOSFET is turned off and the bottom MOSFET is turned on until the overvoltage condition is cleared. The output of this comparator is only latched by the overvoltage condition itself and will therefore allow a switching regulator system having a poor PC layout to function while the design is being debugged. The bottom MOSFET remains on continuously for as long as the OV condition persists; if V_{OUT} returns to a safe level, normal operation automatically resumes. A shorted top MOSFET will result in a high current condition which will open the system fuse. The switching regulator will regulate properly with a leaky top MOSFET by altering the duty cycle to accommodate the leakage.

Phase-Locked Loop and Frequency Synchronization

The LTC3727 has a phase-locked loop comprised of an internal voltage controlled oscillator and phase detector. This allows the top MOSFET turn-on to be locked to the rising edge of an external source. The frequency range of the voltage controlled oscillator is ±50% around the center frequency f_O. A voltage applied to the PLLFLTR pin of 1.2V corresponds to a frequency of approximately 380kHz. The nominal operating frequency range of the LTC3727 is 250kHz to 550kHz.

APPLICATIONS INFORMATION

The phase detector used is an edge sensitive digital type which provides zero degrees phase shift between the external and internal oscillators. This type of phase detector will not lock up on input frequencies close to the harmonics of the VCO center frequency. The PLL hold-in range, Δf_H, is equal to the capture range, Δf_C:

$$\Delta f_H = \Delta f_C = \pm 0.5\ f_O\ (250kHz\text{-}550kHz)$$

The output of the phase detector is a complementary pair of current sources charging or discharging the external filter network on the PLLFLTR pin.

If the external frequency (f_{PLLIN}) is greater than the oscillator frequency f_{OSC}, current is sourced continuously, pulling up the PLLFLTR pin. When the external frequency is less than f_{OSC}, current is sunk continuously, pulling down the PLLFLTR pin. If the external and internal frequencies are the same but exhibit a phase difference, the current sources turn on for an amount of time corresponding to the phase difference. Thus the voltage on the PLLFLTR pin is adjusted until the phase and frequency of the external and internal oscillators are identical. At this stable operating point the phase comparator output is open and the filter capacitor C_{LP} holds the voltage. The LTC3727 PLLIN pin must be driven from a low impedance source such as a logic gate located close to the pin. When using multiple LTC3727s for a phase-locked system, the PLLFLTR pin of the master oscillator should be biased at a voltage that will guarantee the slave oscillator(s) ability to lock onto the master's frequency. A DC voltage of 0.7V to 1.7V applied to the master oscillator's PLLFLTR pin is recommended in order to meet this requirement. The resultant operating frequency can range from 310kHz to 470kHz.

The loop filter components (C_{LP}, R_{LP}) smooth out the current pulses from the phase detector and provide a stable input to the voltage controlled oscillator. The filter components C_{LP} and R_{LP} determine how fast the loop acquires lock. Typically R_{LP} =10kΩ and C_{LP} is 0.01μF to 0.1μF.

Minimum On-Time Considerations

Minimum on-time $t_{ON(MIN)}$ is the smallest time duration that the LTC3727 is capable of turning on the top MOSFET. It is determined by internal timing delays and the gate charge required to turn on the top MOSFET. Low duty cycle applications may approach this minimum on-time limit and care should be taken to ensure that

$$t_{ON(MIN)} < \frac{V_{OUT}}{V_{IN}(f)}$$

If the duty cycle falls below what can be accommodated by the minimum on-time, the LTC3727 will begin to skip cycles. The output voltage will continue to be regulated, but the ripple voltage and current will increase.

The minimum on-time for the LTC3727 is generally less than 200ns. However, as the peak sense voltage decreases the minimum on-time gradually increases up to about 300ns. This is of particular concern in forced continuous applications with low ripple current at light loads. If the duty cycle drops below the minimum on-time limit in this situation, a significant amount of cycle skipping can occur with correspondingly larger inductor current and output voltage ripple.

FCB Pin Operation

The FCB pin can be used to regulate a secondary winding or as a logic level input. Continuous operation is forced on both controllers when the FCB pin drops below 0.8V. During continuous mode, current flows continuously in the transformer primary. The secondary winding(s) draw current only when the bottom, synchronous switch is on. When primary load currents are low and/or the V_{IN}/V_{OUT} ratio is low, the synchronous switch may not be on for a sufficient amount of time to transfer power from the output capacitor to the secondary load. Forced continuous operation will support secondary windings providing there is sufficient synchronous switch duty factor. Thus, the FCB input pin removes the requirement that power must

APPLICATIONS INFORMATION

be drawn from the inductor primary in order to extract power from the auxiliary windings. With the loop in continuous mode, the auxiliary outputs may nominally be loaded without regard to the primary output load.

The secondary output voltage V_{SEC} is normally set as shown in Figure 6 by the turns ratio N of the transformer:

$$V_{SEC} \cong (N + 1)\ V_{OUT}$$

However, if the controller goes into Burst Mode operation and halts switching due to a light primary load current, then V_{SEC} will droop. An external resistive divider from V_{SEC} to the FCB pin sets a minimum voltage $V_{SEC(MIN)}$:

$$V_{SEC(MIN)} \cong 0.8V\left(1+\frac{R6}{R5}\right)$$

where R5 and R6 are shown in Figure 2.

If V_{SEC} drops below this level, the FCB voltage forces temporary continuous switching operation until V_{SEC} is again above its minimum.

In order to prevent erratic operation if no external connections are made to the FCB pin, the FCB pin has a 0.18µA internal current source pulling the pin high. Include this current when choosing resistor values R5 and R6.

The following table summarizes the possible states available on the FCB pin:

Table 1

FCB PIN	CONDITION
0V to 0.75V	Forced Continuous Both Controllers (Current Reversal Allowed— Burst Inhibited)
0.85V < V_{FCB} < 6.8V	Minimum Peak Current Induces Burst Mode Operation No Current Reversal Allowed
Feedback Resistors	Regulating a Secondary Winding
>7.3V	Burst Mode Operation Disabled Constant Frequency Mode Enabled No Current Reversal Allowed No Minimum Peak Current

Voltage Positioning

Voltage positioning can be used to minimize peak-to-peak output voltage excursions under worst-case transient loading conditions. The open-loop DC gain of the control loop is reduced depending upon the maximum load step specifications. Voltage positioning can easily be added to the LTC3727 by loading the I_{TH} pin with a resistive divider having a Thevenin equivalent voltage source equal to the midpoint operating voltage range of the error amplifier, or 1.2V (see Figure 8).

The resistive load reduces the DC loop gain while maintaining the linear control range of the error amplifier. The maximum output voltage deviation can theoretically be reduced to half or alternatively the amount of output capacitance can be reduced for a particular application. A complete explanation is included in Design Solutions 10 (see www.Linear.com).

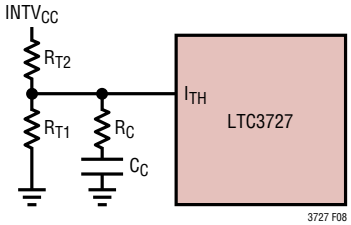

Figure 8. Active Voltage Positioning Applied to the LTC3727

Efficiency Considerations

The percent efficiency of a switching regulator is equal to the output power divided by the input power times 100%. It is often useful to analyze individual losses to determine what is limiting the efficiency and which change would produce the most improvement. Percent efficiency can be expressed as:

$$\%\text{Efficiency} = 100\% - (L1 + L2 + L3 + ...)$$

where L1, L2, etc. are the individual losses as a percentage of input power.

Although all dissipative elements in the circuit produce losses, four main sources usually account for most of the losses in LTC3727 circuits: 1) LTC3727 V_{IN} current (including loading on the 3.3V internal regulator), 2) $INTV_{CC}$ regulator current, 3) I^2R losses, 4) Topside MOSFET transition losses.

1. The V_{IN} current has two components: the first is the DC supply current given in the Electrical Characteristics table,

APPLICATIONS INFORMATION

which excludes MOSFET driver and control currents; the second is the current drawn from the 3.3V linear regulator output. V_{IN} current typically results in a small (<0.1%) loss.

2. $INTV_{CC}$ current is the sum of the MOSFET driver and control currents. The MOSFET driver current results from switching the gate capacitance of the power MOSFETs. Each time a MOSFET gate is switched from low to high to low again, a packet of charge dQ moves from $INTV_{CC}$ to ground. The resulting dQ/dt is a current out of $INTV_{CC}$ that is typically much larger than the control circuit current. In continuous mode, $I_{GATECHG} = f(Q_T + Q_B)$, where Q_T and Q_B are the gate charges of the topside and bottom side MOSFETs.

Supplying $INTV_{CC}$ power through the $EXTV_{CC}$ switch input from an output-derived source will scale the V_{IN} current required for the driver and control circuits by a factor of (Duty Cycle)/(Efficiency). For example, in a 20V to 5V application, 10mA of $INTV_{CC}$ current results in approximately 2.5mA of V_{IN} current. This reduces the mid-current loss from 10% or more (if the driver was powered directly from V_{IN}) to only a few percent.

3. I^2R losses are predicted from the DC resistances of the fuse (if used), MOSFET, inductor, current sense resistor, and input and output capacitor ESR. In continuous mode the average output current flows through L and R_{SENSE}, but is "chopped" between the topside MOSFET and the synchronous MOSFET. If the two MOSFETs have approximately the same $R_{DS(ON)}$, then the resistance of one MOSFET can simply be summed with the resistances of L, R_{SENSE} and ESR to obtain I^2R losses. For example, if each $R_{DS(ON)} = 30m\Omega$, $R_L = 50m\Omega$, $R_{SENSE} = 10m\Omega$ and $R_{ESR} = 40m\Omega$ (sum of both input and output capacitance losses), then the total resistance is $130m\Omega$. This results in losses ranging from 3% to 13% as the output current increases from 1A to 5A for a 5V output, or a 4% to 20% loss for a 3.3V output. Efficiency varies as the inverse square of V_{OUT} for the same external components and output power level. The combined effects of increasingly lower output voltages and higher currents required by high performance digital systems is not doubling but quadrupling the importance of loss terms in the switching regulator system!

4. Transition losses apply only to the topside MOSFET(s), and become significant only when operating at high input voltages (typically 15V or greater). Transition losses can be estimated from:

$$\text{Transition Loss} = (1.7)\ V_{IN}^2\ I_{O(MAX)}\ C_{RSS}\ f$$

Other "hidden" losses such as copper trace and internal battery resistances can account for an additional 5% to 10% efficiency degradation in portable systems. It is very important to include these "system" level losses during the design phase. The internal battery and fuse resistance losses can be minimized by making sure that C_{IN} has adequate charge storage and very low ESR at the switching frequency. A 25W supply will typically require a minimum of 22µF to 47µF of capacitance having a maximum of 20mΩ to 50mΩ of ESR. The LTC3727 2-phase architecture typically halves this input capacitance requirement over competing solutions. Other losses, including Schottky diode conduction losses during dead-time and inductor core losses, generally account for less than 2% total additional loss.

Checking Transient Response

The regulator loop response can be checked by looking at the load current transient response. Switching regulators take several cycles to respond to a step in DC (resistive) load current. When a load step occurs, V_{OUT} shifts by an amount equal to ΔI_{LOAD} (ESR), where ESR is the effective series resistance of C_{OUT}. ΔI_{LOAD} also begins to charge or discharge C_{OUT} generating the feedback error signal that forces the regulator to adapt to the current change and return V_{OUT} to its steady-state value. During this recovery time V_{OUT} can be monitored for excessive overshoot or ringing, which would indicate a stability problem. OPTI-LOOP compensation allows the transient response to be optimized over a wide range of output capacitance and ESR values. *The availability of the I_{TH} pin not only allows optimization of control loop behavior but also provides a DC coupled and AC filtered closed loop response test point. The DC step, rise time and settling at this test point truly reflects the closed loop response.* Assuming a predominantly second order system, phase margin and/or damping factor can be estimated using the percentage of

APPLICATIONS INFORMATION

overshoot seen at this pin. The bandwidth can also be estimated by examining the rise time at the pin. The I_{TH} external components shown in the Figure 1 circuit will provide an adequate starting point for most applications.

The I_{TH} series R_C-C_C filter sets the dominant pole-zero loop compensation. The values can be modified slightly (from 0.5 to 2 times their suggested values) to optimize transient response once the final PC layout is done and the particular output capacitor type and value have been determined. The output capacitors need to be selected because the various types and values determine the loop gain and phase. An output current pulse of 20% to 80% of full-load current having a rise time of 1µs to 10µs will produce output voltage and I_{TH} pin waveforms that will give a sense of the overall loop stability without breaking the feedback loop. Placing a power MOSFET directly across the output capacitor and driving the gate with an appropriate signal generator is a practical way to produce a realistic load step condition. The initial output voltage step resulting from the step change in output current may not be within the bandwidth of the feedback loop, so this signal cannot be used to determine phase margin. This is why it is better to look at the I_{TH} pin signal which is in the feedback loop and is the filtered and compensated control loop response. The gain of the loop will be increased by increasing R_C and the bandwidth of the loop will be increased by decreasing C_C. If R_C is increased by the same factor that C_C is decreased, the zero frequency will be kept the same, thereby keeping the phase shift the same in the most critical frequency range of the feedback loop. The output voltage settling behavior is related to the stability of the closed-loop system and will demonstrate the actual overall supply performance.

A second, more severe transient is caused by switching in loads with large (>1µF) supply bypass capacitors. The discharged bypass capacitors are effectively put in parallel with C_{OUT}, causing a rapid drop in V_{OUT}. No regulator can alter its delivery of current quickly enough to prevent this sudden step change in output voltage if the load switch resistance is low and it is driven quickly. If the ratio of C_{LOAD} to C_{OUT} is greater than 1:50, the switch rise time should be controlled so that the load rise time is limited to approximately 25 • C_{LOAD}. Thus a 10µF capacitor would require a 250µs rise time, limiting the charging current to about 200mA.

Automotive Considerations: Plugging into the Cigarette Lighter

As battery-powered devices go mobile, there is a natural interest in plugging into the cigarette lighter in order to conserve or even recharge battery packs during operation. But before you connect, be advised: you are plugging into the supply from Hell. The main power line in an automobile is the source of a number of nasty potential transients, including load-dump, reverse-battery, and double-battery.

Load-dump is the result of a loose battery cable. When the cable breaks connection, the field collapse in the alternator can cause a positive spike as high as 60V which takes several hundred milliseconds to decay. Reverse-battery is just what it says, while double-battery is a consequence of tow-truck operators finding that a 24V jump start cranks cold engines faster than 12V.

The network shown in Figure 9 is the most straight forward approach to protect a DC/DC converter from the ravages of an automotive power line. The series diode prevents current from flowing during reverse-battery, while the transient suppressor clamps the input voltage during load-dump. Note that the transient suppressor should not conduct during double-battery operation, but must still clamp the input voltage below breakdown of the converter. Although the LTC3727 has a maximum input voltage of 36V, most applications will be limited to 30V by the MOSFET BVDSS.

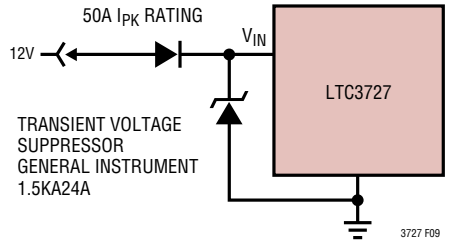

Figure 9. Automotive Application Protection

APPLICATIONS INFORMATION

Design Example

As a design example for one channel, assume V_{IN} = 24V(nominal), V_{IN} = 30V(max), V_{OUT} = 12V, I_{MAX} = 5A and f = 250kHz.

The inductance value is chosen first based on a 40% ripple current assumption. The highest value of ripple current occurs at the maximum input voltage. Tie the PLLFLTR pin to the SGND pin for 250kHz operation. The minimum inductance for 40% ripple current is:

$$\Delta I_L = \frac{V_{OUT}}{(f)(L)}\left(1-\frac{V_{OUT}}{V_{IN}}\right)$$

A 14μH inductor will result in 40% ripple current. The peak inductor current will be the maximum DC value plus one half the ripple current, or 6A, for the 14μH value.

The R_{SENSE} resistor value can be calculated by using the maximum current sense voltage specification with some accommodation for tolerances:

$$R_{SENSE} \le \frac{90mV}{6A} \approx 0.015\Omega$$

Choosing 1% resistors; R1 = 20k and R2 = 280k yields an output voltage of 12V.

The power dissipation on the top side MOSFET can be easily estimated. Choosing a Siliconix Si4412DY results in: $R_{DS(ON)}$ = 0.042Ω, C_{RSS} = 100pF. At maximum input voltage with T(estimated) = 50°C:

$$P_{MAIN} = \frac{12V}{30V}(5)^2\left[1+(0.005)(50°C-25°C)\right]$$
$$(0.042\Omega)+1.7(30V)^2(5A)(100pF)(250kHz)$$
$$= 664mW$$

A short-circuit to ground will result in a folded back current of:

$$I_{SC} = \frac{45mV}{0.015\Omega}+\frac{1}{2}\left(\frac{200ns(30V)}{14\mu H}\right) = 3.2A$$

with a typical value of $R_{DS(ON)}$ and δ = (0.005/°C)(20) = 0.1. The resulting power dissipated in the bottom MOSFET is:

$$P_{SYNC} = \frac{30V-12V}{30V}(3.2A)^2(1.1)(0.042\Omega)$$
$$= 284mW$$

which is less than under full-load conditions.

C_{IN} is chosen for an RMS current rating of at least 3A at temperature assuming only this channel is on. C_{OUT} is chosen with an ESR of 0.02Ω for low output ripple. The output ripple in continuous mode will be highest at the maximum input voltage. The output voltage ripple due to ESR is approximately:

$$V_{ORIPPLE} = R_{ESR}(\Delta I_L) = 0.02\Omega(2A) = 40mV_{P-P}$$

PC Board Layout Checklist

When laying out the printed circuit board, the following checklist should be used to ensure proper operation of the LTC3727. These items are also illustrated graphically in the layout diagram of Figure 10; Figure 11 illustrates the current waveforms present in the various branches of the 2-phase synchronous regulators operating in continuous mode. Check the following in your layout:

1. Are the top N-channel MOSFETs M1 and M3 located within 1cm of each other with a common drain connection at C_{IN}? Do not attempt to split the input decoupling for the two channels as it can cause a large resonant loop.

APPLICATIONS INFORMATION

2. Are the signal and power grounds kept separate? The combined LTC3727 signal ground pin and the ground return of C_{INTVCC} must return to the combined C_{OUT} (–) terminals. The path formed by the top N-channel MOSFET, Schottky diode and the C_{IN} capacitor should have short leads and PC trace lengths. The output capacitor (–) terminals should be connected as close as possible to the (–) terminals of the input capacitor by placing the capacitors next to each other and away from the Schottky loop described above.

3. Do the LTC3727 V_{OSENSE} pins resistive dividers connect to the (+) terminals of C_{OUT}? The resistive divider must be connected between the (+) terminal of C_{OUT} and signal ground. The R2 and R4 connections should not be along the high current input feeds from the input capacitor(s).

4. Are the $SENSE^-$ and $SENSE^+$ leads routed together with minimum PC trace spacing? The filter capacitor between $SENSE^+$ and $SENSE^-$ should be as close as possible to the IC. Ensure accurate current sensing with Kelvin connections at the SENSE resistor.

5. Is the $INTV_{CC}$ decoupling capacitor connected close to the IC, between the $INTV_{CC}$ and the power ground pins? This capacitor carries the MOSFET drivers current peaks. An additional 1µF ceramic capacitor placed immediately next to the $INTV_{CC}$ and PGND pins can help improve noise performance substantially.

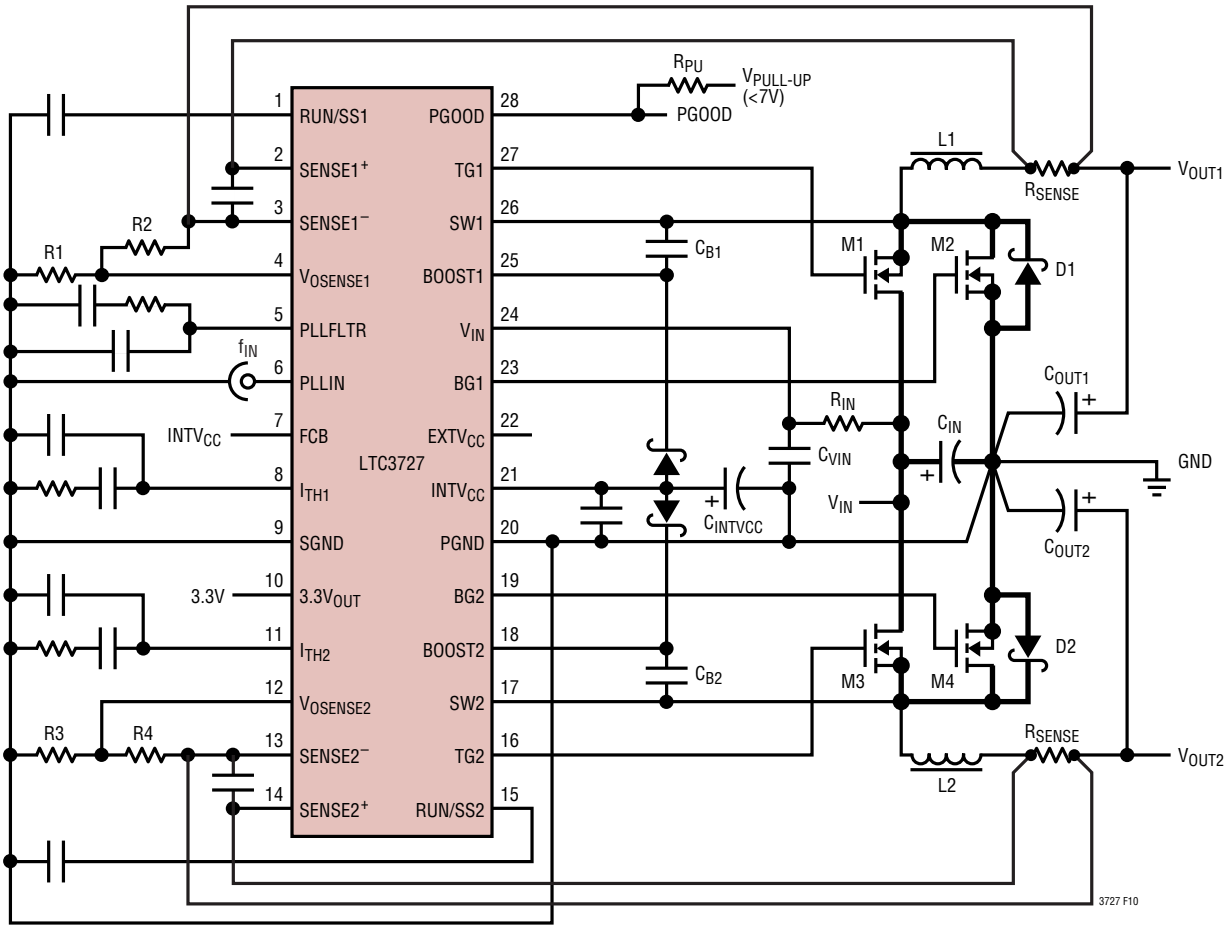

Figure 10. LTC3727 Recommended Printed Circuit Layout Diagram

APPLICATIONS INFORMATION

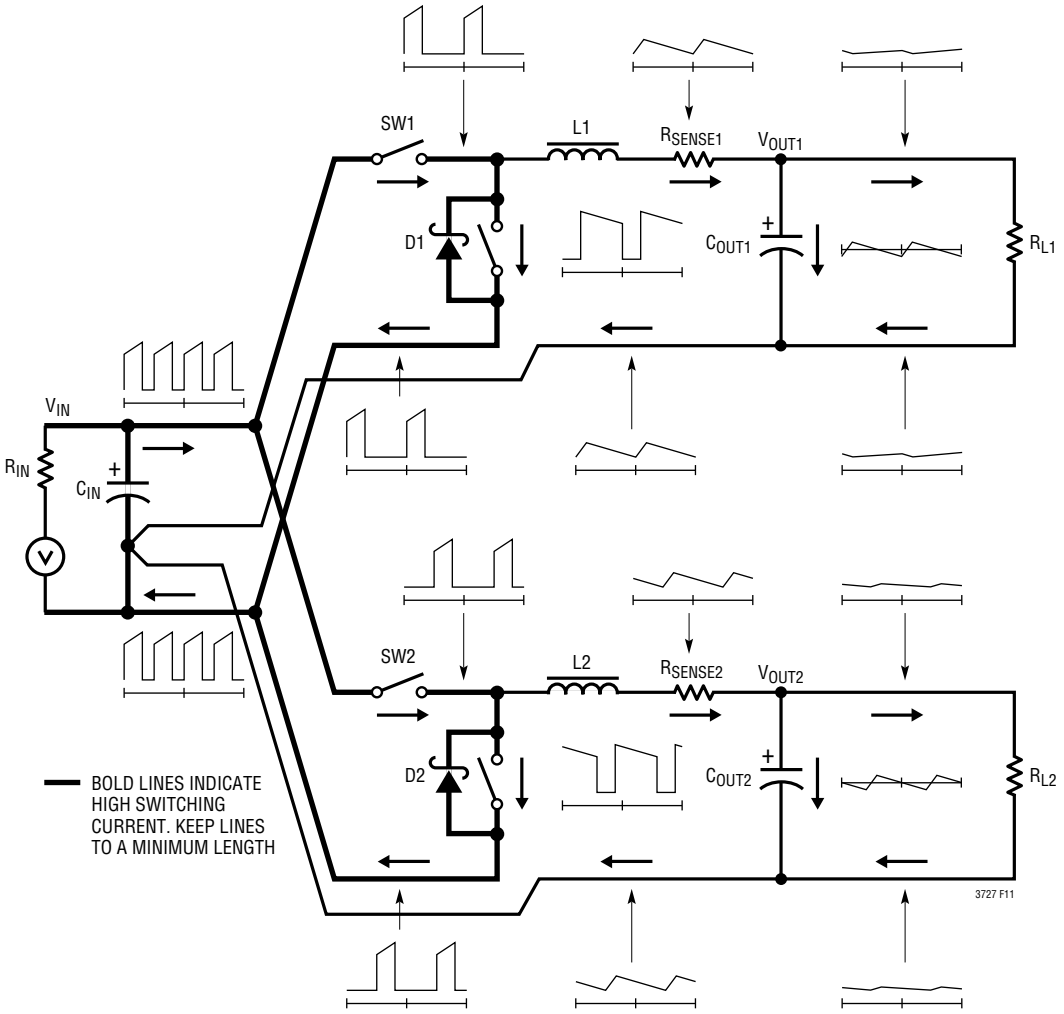

Figure 11. Branch Current Waveforms

6. Keep the switching nodes (SW1, SW2), top gate nodes (TG1, TG2), and boost nodes (BOOST1, BOOST2) away from sensitive small-signal nodes, especially from the opposites channel's voltage and current sensing feedback pins. All of these nodes have very large and fast moving signals and therefore should be kept on the "output side" of the LTC3727 and occupy minimum PC trace area.

7. Use a modified "star ground" technique: a low impedance, large copper area central grounding point on the same side of the PC board as the input and output capacitors with tie-ins for the bottom of the $INTV_{CC}$ decoupling capacitor, the bottom of the voltage feedback resistive divider and the SGND pin of the IC.

PC Board Layout Debugging

Start with one controller on at a time. It is helpful to use a DC-50MHz current probe to monitor the current in the inductor while testing the circuit. Monitor the output switching node (SW pin) to synchronize the oscilloscope to the internal oscillator and probe the actual output voltage as well. Check for proper performance over the operating voltage and current range expected in the

APPLICATIONS INFORMATION

application. The frequency of operation should be maintained over the input voltage range down to dropout and until the output load drops below the low current operation threshold—typically 10% to 20% of the maximum designed current level in Burst Mode operation.

The duty cycle percentage should be maintained from cycle to cycle in a well-designed, low noise PCB implementation. Variation in the duty cycle at a subharmonic rate can suggest noise pickup at the current or voltage sensing inputs or inadequate loop compensation. Overcompensation of the loop can be used to tame a poor PC layout if regulator bandwidth optimization is not required. Only after each controller is checked for its individual performance should both controllers be turned on at the same time. A particularly difficult region of operation is when one controller channel is nearing its current comparator trip point when the other channel is turning on its top MOSFET. This occurs around 50% duty cycle on either channel due to the phasing of the internal clocks and may cause minor duty cycle jitter.

Short-circuit testing can be performed to verify proper overcurrent latchoff, or 5μA can be provided to the RUN/SS pin(s) by resistors from V_{IN} to prevent the short-circuit latchoff from occurring.

Reduce V_{IN} from its nominal level to verify operation of the regulator in dropout. Check the operation of the undervoltage lockout circuit by further lowering V_{IN} while monitoring the outputs to verify operation.

Investigate whether any problems exist only at higher output currents or only at higher input voltages. If problems coincide with high input voltages and low output currents, look for capacitive coupling between the BOOST, SW, TG, and possibly BG connections and the sensitive voltage and current pins. The capacitor placed across the current sensing pins needs to be placed immediately adjacent to the pins of the IC. This capacitor helps to minimize the effects of differential noise injection due to high frequency capacitive coupling. If problems are encountered with high current output loading at lower input voltages, look for inductive coupling between C_{IN}, Schottky and the top MOSFET components to the sensitive current and voltage sensing traces. In addition, investigate common ground path voltage pickup between these components and the SGND pin of the IC.

An embarrassing problem, which can be missed in an otherwise properly working switching regulator, results when the current sensing leads are hooked up backwards. The output voltage under this improper hookup will still be maintained but the advantages of current mode control will not be realized. Compensation of the voltage loop will be much more sensitive to component selection. This behavior can be investigated by temporarily shorting out the current sensing resistor—don't worry, the regulator will still maintain control of the output voltage.

TYPICAL APPLICATIONS

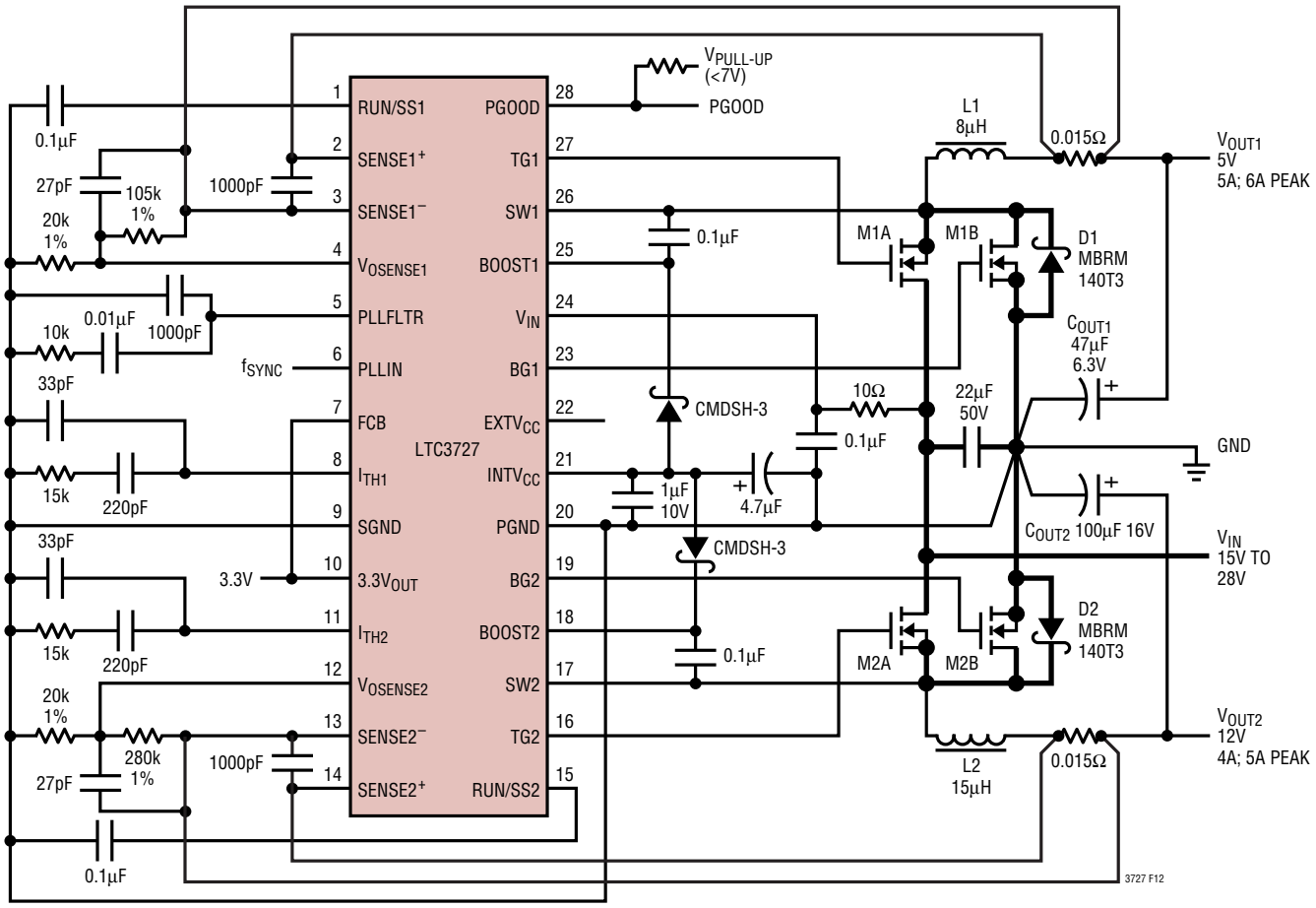

C_{OUT1}: PANASONIC EEFCDOJ470R
C_{OUT2}: SANYO OS-CON 16SVP100M
V_{IN}: 15V TO 28V
V_{OUT}: 5V, 5A/12V, 4A
SWITCHING FREQUENCY = 250kHz
MI, M2: FAIRCHILD FDS6680A
L1: 8µH SUMIDA CDEP134-8R0
L2: 15µH COILTRONICS UP4B-150

Figure 12. LTC3727 12V/4A, 5V/5A Regulator with External Frequency Synchronization

TYPICAL APPLICATIONS

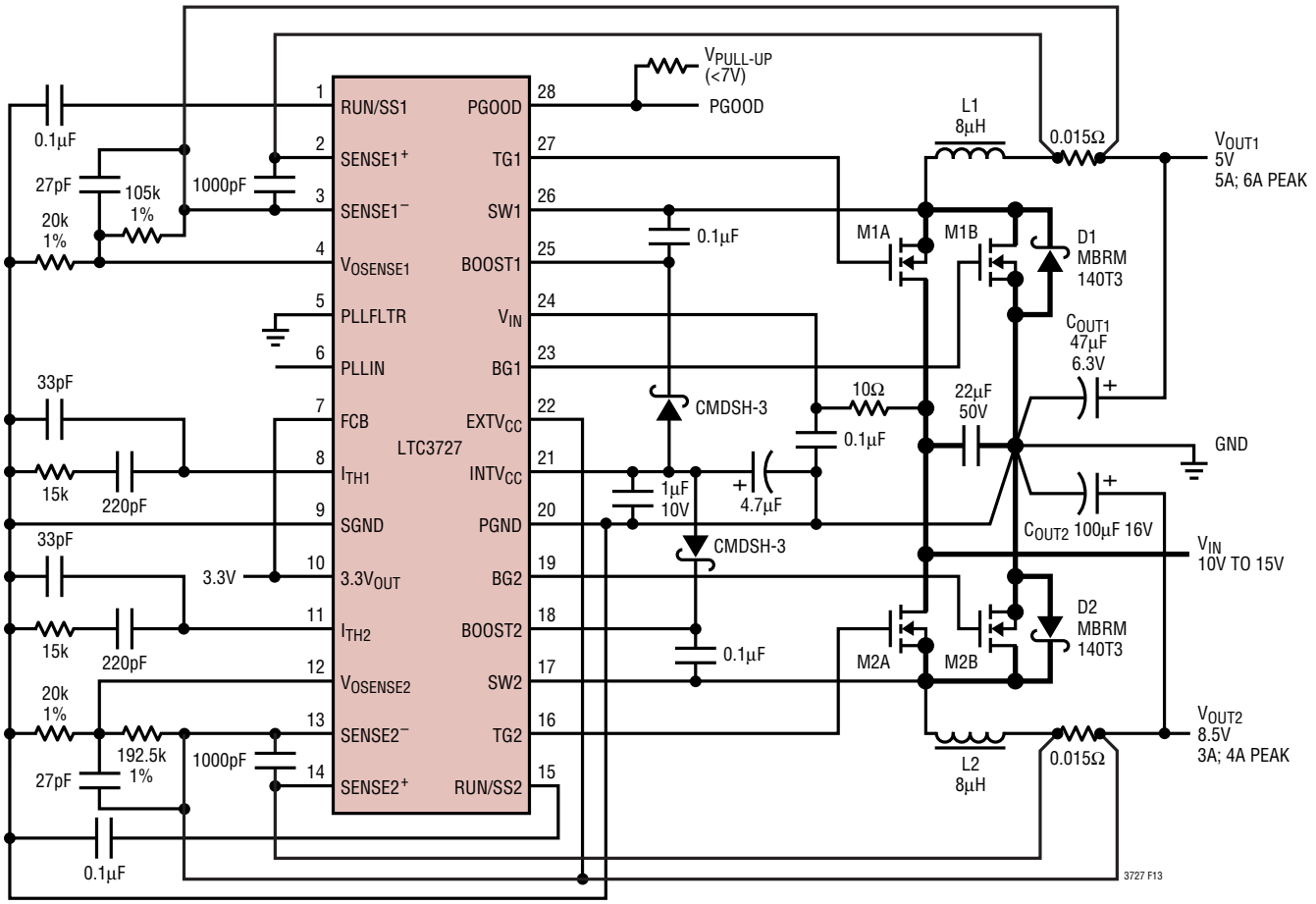

C_{OUT1}: PANASONIC EEFCDOJ470R
C_{OUT2}: SANYO OS-CON 16SVP100M
V_{IN}: 10V TO 15V
V_{OUT}: 5V, 5A/8.5V, 3A
SWITCHING FREQUENCY = 250kHz
MI, M2: FAIRCHILD FDS6680A
L1, L2: 8μH SUMIDA CDEP134-8R0

Figure 13. LTC3727 8.5V/3A, 5V/5A Regulator

PACKAGE DESCRIPTION

G Package
28-Lead Plastic SSOP (5.3mm)
(Reference LTC DWG # 05-08-1640)

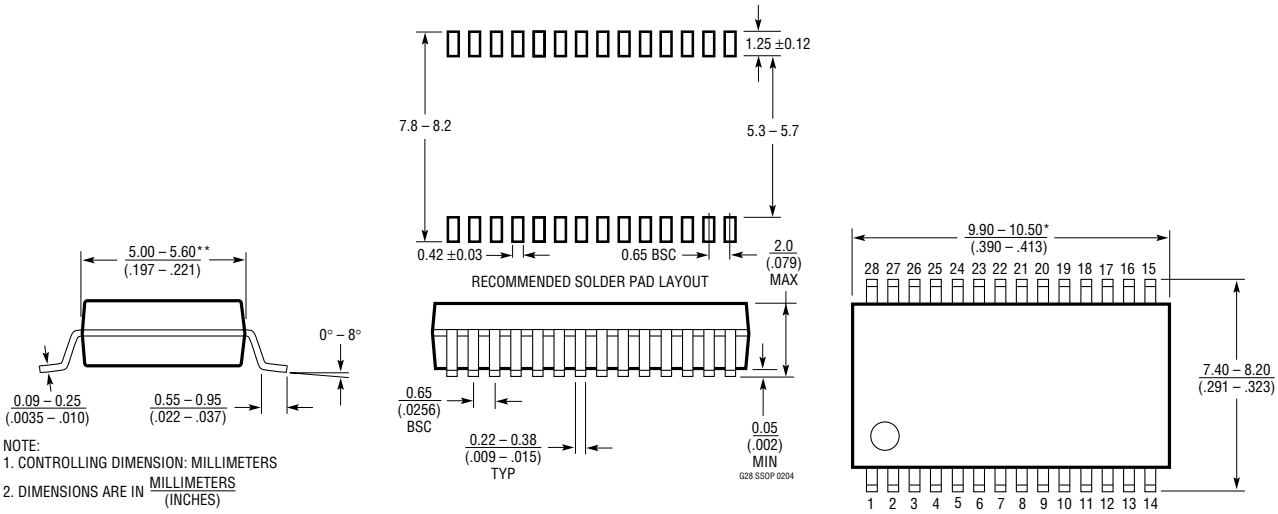

NOTE:
1. CONTROLLING DIMENSION: MILLIMETERS
2. DIMENSIONS ARE IN $\frac{\text{MILLIMETERS}}{\text{(INCHES)}}$
3. DRAWING NOT TO SCALE

*DIMENSIONS DO NOT INCLUDE MOLD FLASH. MOLD FLASH SHALL NOT EXCEED .152mm (.006") PER SIDE

**DIMENSIONS DO NOT INCLUDE INTERLEAD FLASH. INTERLEAD FLASH SHALL NOT EXCEED .254mm (.010") PER SIDE

UH Package
32-Lead Plastic QFN (5mm × 5mm)
(Reference LTC DWG # 05-08-1693 Rev D)

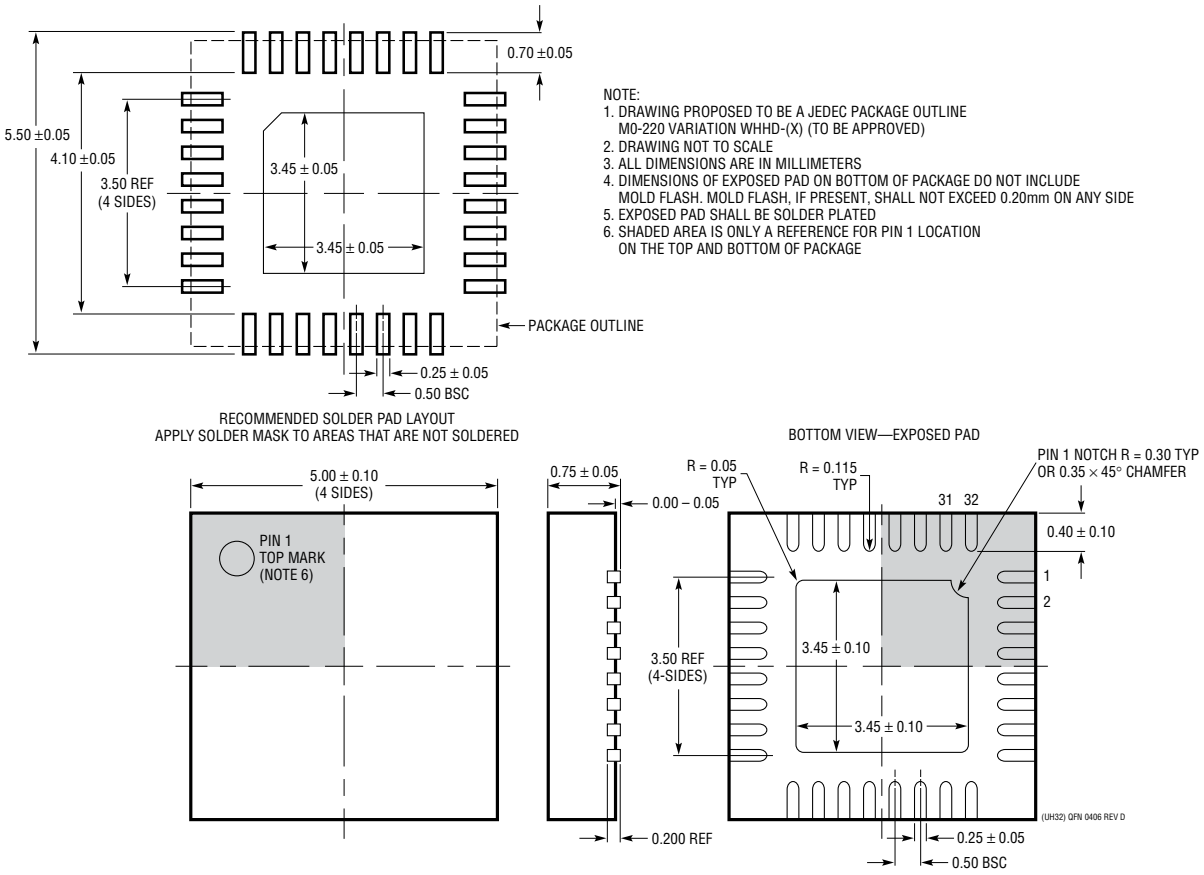

NOTE:
1. DRAWING PROPOSED TO BE A JEDEC PACKAGE OUTLINE M0-220 VARIATION WHHD-(X) (TO BE APPROVED)
2. DRAWING NOT TO SCALE
3. ALL DIMENSIONS ARE IN MILLIMETERS
4. DIMENSIONS OF EXPOSED PAD ON BOTTOM OF PACKAGE DO NOT INCLUDE MOLD FLASH. MOLD FLASH, IF PRESENT, SHALL NOT EXCEED 0.20mm ON ANY SIDE
5. EXPOSED PAD SHALL BE SOLDER PLATED
6. SHADED AREA IS ONLY A REFERENCE FOR PIN 1 LOCATION ON THE TOP AND BOTTOM OF PACKAGE

Information furnished by Linear Technology Corporation is believed to be accurate and reliable. However, no responsibility is assumed for its use. Linear Technology Corporation makes no representation that the interconnection of its circuits as described herein will not infringe on existing patent rights.

RELATED PARTS

PART NUMBER	DESCRIPTION	COMMENTS
LTC1625/LTC1775	No R_{SENSE}™ Current Mode Synchronous Step-Down Controllers	97% Efficiency, No Sense Resistor, 16-Pin SSOP
LTC1702	No R_{SENSE} 2-Phase Dual Synchronous Step-Down Controller	550kHz, No Sense Resistor
LTC1703	No R_{SENSE} 2-Phase Dual Synchronous Step-Down Controller with 5-Bit Mobile VID Control	Mobile Pentium® III Processors, 550kHz, $V_{IN} \leq 7V$
LTC1708-PG	2-Phase, Dual Synchronous Controller with Mobile VID	$3.5V \leq V_{IN} \leq 36V$, VID Sets V_{OUT1}, PGOOD
LT1709/ LT1709-8	High Efficiency, 2-Phase Synchronous Step-Down Switching Regulators with 5-Bit VID	$1.3V \leq V_{OUT} \leq 3.5V$, Current Mode Ensures Accurate Current Sharing, $3.5V \leq V_{IN} \leq 36V$
LTC1735	High Efficiency Synchronous Step-Down Switching Regulator	Output Fault Protection, 16-Pin SSOP
LTC1736	High Efficiency Synchronous Controller with 5-Bit Mobile VID Control	Output Fault Protection, 24-Pin SSOP, $3.5V \leq V_{IN} \leq 36V$
LTC1876	Triple Output DC/DC Synchronous Controller	Dual, 2-Phase Step-Down and Step-Up DC/DC Converter, $2.6V \leq V_{IN} \leq 36V$, Fixed Frequency 150kHz to 300kHz
LTC1778	No R_{SENSE} Wide Input Range Synchronous Step-Down Controller	Up to 97% Efficiency, $4V \leq V_{IN} \leq 36V$, $0.8V \leq V_{OUT} \leq (0.9)(V_{IN})$, I_{OUT} Up to 20A
LTC1929/ LTC1929-PG	2-Phase Synchronous Controllers	Up to 42A, Uses All Surface Mount Components, No Heat Sinks, $3.5V \leq V_{IN} \leq 36V$
LTC3727A-1	Dual, 2-Phase Synchronous Controller	Very Low Dropout; $V_{OUT} \leq 14V$
LTC3728	2-Phase 550kHz, Dual Synchronous Step-Down Controller	QFN and SSOP Packages, High Frequency for Smaller L and C
LTC3729	20A to 200A PolyPhase® Synchronous Controllers	Expandable from 2-Phase to 12-Phase, Uses All Surface Mount Components, No Heat Sink
LTC3731	3-Phase, 600kHz Synchronous Step-Down Controller	$0.6V \leq V_{OUT} \leq 6V$, $4.5V \leq V_{IN} \leq 32V$, $I_{OUT} \leq 60A$, Integrated MOSFET Drivers

PolyPhase is a registered trademark of Linear Technology Corporation. No R_{SENSE} is a trademark of Linear Technology Corporation.
Pentium is a registered trademark of Intel Corporation.

Linear Technology Corporation
1630 McCarthy Blvd., Milpitas, CA 95035-7417
(408) 432-1900 • FAX: (408) 434-0507 • www.linear.com

LT 0507 REV C • PRINTED IN USA

© LINEAR TECHNOLOGY CORPORATION 2001