TDA7462

DUAL AUDIOPROCESSOR WITH COMPANDER AND SUBWOOFER OUTPUT

- FULLY INTEGRATED AUDIOPROCESSOR
- 5 STEREO + 1 MONO INPUTS
- FOUR INDEPENDENT SPEAKER OUTPUTS
- DYNAMIC COMPRESSION STAGE FOR CD
- SUBWOOFER OUTPUT
- SOFTSTEP FEATURE FOR VOLUME
- VOICE-BAND FILTER
- DIRECT MUTE AND SOFTMUTE
- PAUSE DETECTOR
- FULLY PROGRAMMABLE BY I^2C BUS INTERFACE

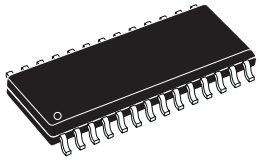

SO28

ORDERING NUMBER: TDA7462D

DESCRIPTION

The TDA7462 is a high performance audioprocessor with fully integrated audio filters. The digital control allows the programming of all filter characteristics in a wide range without the need of external components. New innovative features are included , a dynamic compression stage to optimize audio response of CD sources an additional output channel for subwoofer and a separate source selector for rear channel. The use of a dedicated BICMOS process makes signal processing very linear thus achieving low distortion and low noise figures.

BLOCK DIAGRAM

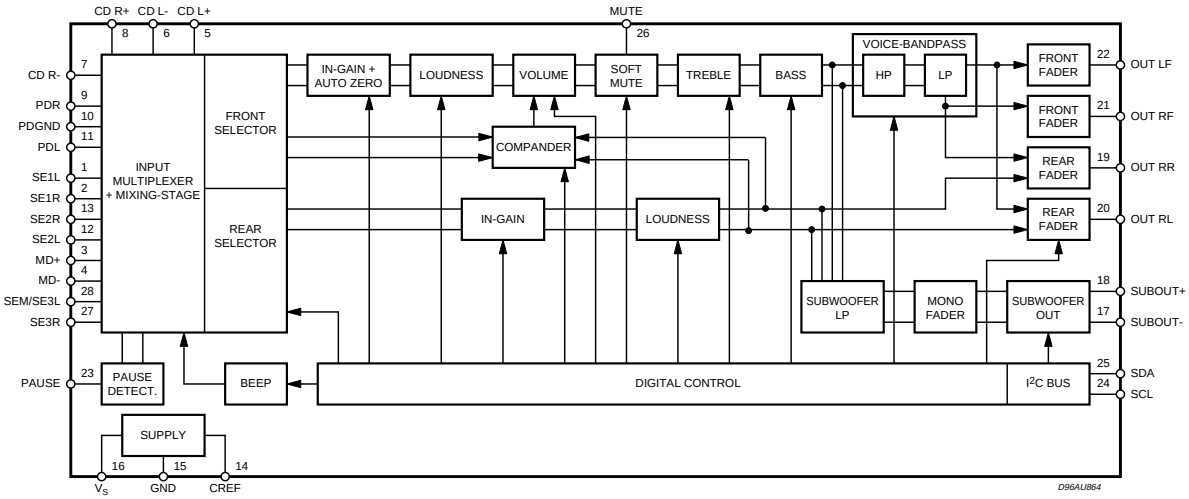

ABSOLUTE MAXIMUM RATINGS

Symbol	Parameter	Value	Unit
V_S	Operating Supply Voltage	10.5	V
T_{amb}	Operating Ambient Temperature Range	-40 to 85	°C
T_{stg}	Operating Storage Temperature Range	-55 to 150	°C

SUPPLY

Symbol	Parameter	Test Condition	Min.	Typ.	Max.	Unit
V_S	Supply Voltage		7.5	9	10.2	V
I_S	Supply Current	V_S = 9V	25	30	35	mA
SVRR	Ripple Rejection @ 1KHz	Audioprocessor (all filters flat)		60		dB

ESD

All pins are protected against ESD according to the MIL883 standard.

PIN CONNECTION

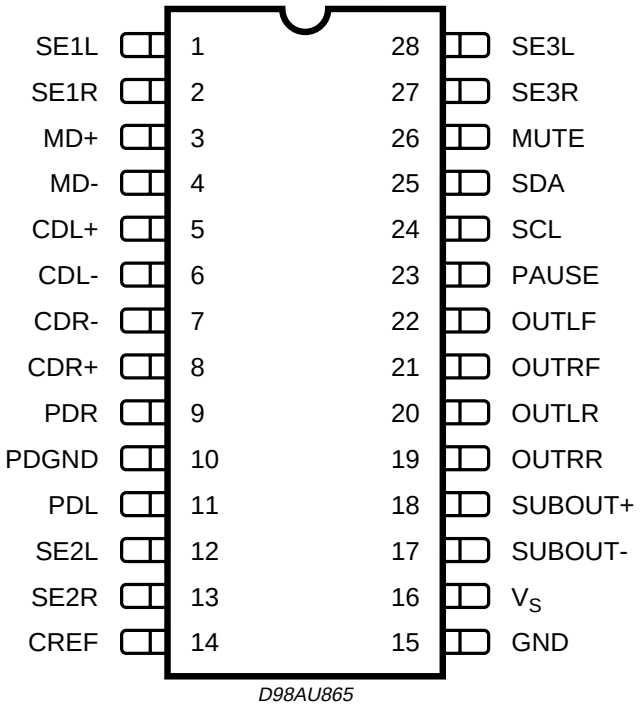

THERMAL DATA

Symbol	Parameter		Value	Unit
$R_{th\text{-}j\ pins}$	Thermal Resistance Junction-pins	Max	85	°C/W

PIN DESCRIPTION

N.	Name	Function	Type
1	SE1L	Single Ended Input 1 Left Channel	I
2	SE1R	Single Ended Input 1 Right Channel	I
3	MD+	Mono Differenzial Input +	I
4	MD-	Mono Differenzial Input -	I
5	CDL+	CD Input Left Channel +	I
6	CDL-	CD Input Left Channel -	I
7	CDR-	CD Input Right Channel -	I
8	CDR+	CD Input Right Channel +	I
9	PDR	Pseudo Differential Input Left	I
10	PDGND	Pseudo Differential Common Ground	I
11	PDL	Pseudo Differential Input Right	I
12	SE2L	Single Ended Input 2 Left Channel	I
13	SE2R	Single Ended Input 2 Right Channel	I
14	CREF	Stabilizer Capacitor Pin	S
15	GND	Supply Ground	S
16	VS	Supply Voltage	S
17	SUBOUT-	Subwoofer Output -	O
18	SUBOUT+	Subwoofer Output +	O
19	OUTRR	Speaker Output Right Rear	O
20	OUTLR	Speaker Output Left Rear	O
21	OUTRF	Speaker Output Right Front	O
22	OUTLF	Speaker Output Left Front	O
23	PAUSE	Pause Detector Output	O
24	SCL	I^2C bus clock	I
25	SDA	I^2C bus data	I/O
26	MUTE	Softmute drive	I
27	SE3R	Single Ended Input 3 Right Channel	I
28	SE3L	Single Ended Input 3 Left Channel	I

Pin type legenda:

I = Input

O = Output

I/O = Input/Output

S = Supply

ELECTRICAL CHARACTERISTICS (V_S = 9V; T_{amb} = 25°C; R_L = 10KΩ; all gains = 0dB; f = 1KHz; unless otherwise specified).

Symbol	Parameter	Test Condition	Min.	Typ.	Max.	Unit
INPUT SELECTOR						
R_{in}	Input Resistance	all inputs except Phone	70	100	130	KΩ
V_{CL}	Clipping Level		2.2	2.6		V_{RMS}
S_{IN}	Input Separation		80	100		dB
$G_{IN\ MIN}$	Min. Input Gain		-1	0	1	dB
$G_{IN\ MAX}$	Max. Input Gain		13	15	17	dB
G_{STEP}	Step Resolution		0.5	1	1.5	dB
V_{DC}	DC Steps	Adjacent Gain Step	-5	1	5	mV
		G_{MIN} to G_{MAX}	-10	6	10	mV
V_{offset}	Remaining offset with AutoZero			0.5		mV
DIFFERENTIAL CD STEREO INPUT						
R_{in}	Input Resistance	Differential	70	100	130	KΩ
G_{CD}	Gain	only at true differential input	-1 -5 -11	0 -6 -12	1 -7 -13	dB dB dB
CMRR	Common Mode Rejection Ratio	V_{CM} = 1V_{RMS} @ 1KHz	40	70		dB
		V_{CM} = 1V_{RMS} @ 10KHz	40	60		dB
e_N	Output Noise @ Speaker Output	20Hz to 20KHz flat; all stages 0dB		9		µV
DIFFERENTIAL MD INPUT						
R_{in}	Input Resistance	Differential	40	55	70	KΩ
CMRR	Common Mode Rejection Ratio	V_{CM} = 1V_{RMS} @ 1KHz	40	70		dB
		V_{CM} = 1V_{RMS} @ 10KHz	40	60		dB
e_N	Output Noise @ Speaker Output	20Hz to 20KHz flat; all stages 0dB		9		µV
DIFFERENTIAL PHONE INPUT						
R_{in}	Input Resistance	Differential	70	100	130	KΩ
CMRR	Common Mode Rejection Ratio	V_{CM} = 1$_{VRMS}$ @ 1KHz	35	70		dB
		V_{CM} = 1$_{VRMS}$ @ 10KHz	35	60		dB
BEEP CONTROL						
V_{RMS}	Beep Level		250	350	500	mV
f_{BMIN}	Lower Beep Frequency		740	780	820	Hz
f_{BMAX}	Higher Beep Frequency		1.48	1.56	1.64	KHz
MIXING CONTROL						
M_{LEVEL}	Mixing Level	Main/Mix-Source		0/∞		dB
				-3.5/-9.6		dB
				-6/-6		dB
				-12/-2.5		dB
VOLUME CONTROL						
G_{MAX}	Max Gain		30	32	34	dB
A_{MAX}	Max Attenuation		-83	-79.5	-75	dB
A_{STEP}	Step Resolution		0	0.5	1	dB
E_A	Attenuation Set Error	G = -20 to 20dB	-0.75	0	0.75	dB
		G = -80 to -20dB	-4	0	3	dB
E_T	Tracking Error				2	dB
V_{DC}	DC Steps	Adjacent Attenuation Steps		0.1	3	mV
		From 0dB to G_{MIN}		0.5	5	mV
LOUDNESS CONTROL						
A_{STEP}	Step Resolution		0.5	1	1.5	dB
A_{MAX}	Max. Attenuation		13	15	17	dB
f_{CMIN}	Lower Center Frequency		360	400	440	Hz
f_{CMAX}	Higher Center Frequency		720	800	880	Hz

ELECTRICAL CHARACTERISTICS (continued)

Symbol	Parameter	Test Condition	Min.	Typ.	Max.	Unit
SOFT MUTE						
A_{MUTE}	Mute Attenuation		80	100		dB
T_D	Delay Time	T1		0.48	1	ms
		T2		0.96	2	ms
		T3	20	30.7	50	ms
		T4	70	123	170	ms
V_{THlow}	Low Threshold for SM Pin[1]				1	V
V_{THhigh}	High Threshold for SM Pin		2.5			V
R_{PD}	Internal Pull-up Resistor		70	100	130	KΩ
SOFT STEP						
T_{SW}	Switch Time	T_{SW1}		0.16		ms
		T_{SW2}		0.32		ms
		T_{SW3}		0.64		ms
		T_{SW4}		1.28		ms
		T_{SW5}		2.56		ms
		T_{SW6}		5.12		ms
		T_{SW7}		10.2		ms
		T_{SW8}		20.4		ms
BASS CONTROL						
C_{RANGE}	Control Range		±14	±15	±16	dB
A_{STEP}	Step Resolution		0.5	1	1.5	dB
f_C	Center Frequency	f_{C1}	54	60	66	Hz
		f_{C2}	63	70	77	Hz
		f_{C3}	72	80	88	Hz
		f_{C4}	90	100	110	Hz
Q_{BASS}	Quality Factor	Q_1	0.9	1	1.1	
		Q_2	1.1	1.25	1.4	
		Q_3	1.3	1.5	1.7	
		Q_4	1.8	2	2.2	
DC_{GAIN}	Bass-Dc-Gain	DC = off	-1	0	+1	dB
		DC = on	4	4.4	6	dB
TREBLE CONTROL						
C_{RANGE}	Control Range		±13	±14	±15	dB
A_{STEP}	Step Resolution		1	2	3	dB
f_C	Center Frequency	f_{C1}	8	10	12	KHz
		f_{C2}	10	12.5	15	KHz
		f_{C3}	12	15	18	KHz
		f_{C4}	14	17.5	21	KHz
SPEAKER ATTENUATORS						
C_{RANGE}	Control Range		-53	50	-47	dB
A_{STEP}	Step Resolution		0.5	1	2	dB
A_{MUTE}	Output Mute Attenuation		80	90		dB
E_E	Attenuation Set Error		-2		2	dB
V_{DC}	DC Steps	Adjacent Attenuation Steps		0.1	5	mV

1) The SM pin is active low (Mute = 0)

ELECTRICAL CHARACTERISTICS (continued)

Symbol	Parameter	Test Condition	Min.	Typ.	Max.	Unit
FADER OUTPUTS						
V_{CLIP}	Clipping Level	d = 0.3%	2.2	2.6		V_{RMS}
R_L	Output Load Resistance		2			KΩ
C_L	Output Load Capacitance				10	nF
R_{OUT}	Output Impedance			30	100	Ω
V_{DC}	DC Voltage Level		4.3	4.5	4.7	V
PAUSE DETECTOR						
V_{TH}	Zero Crossing Threshold	Window 1		20		mV
		Window 2		40		mV
		Window 3		80		mV
		Window 4		160		mV
I_{DELAY}	Pull-Up Current		15	25	35	µA
V_{THP}	Pause Threshold			3.0		V
VOICE BANDPASS						
f_{HP}	Highpass corner frequency	f_{HP1}	81	90	99	Hz
		f_{HP2}	162	180	198	Hz
		f_{HP3}	117	130	143	Hz
		f_{HP4}	234	260	286	Hz
f_{LP}	Lowpass corner frequency	fLP1	2.7	3	3.3	kHz
		f_{LP2}	5.4	6	6.6	kHz
SUBWOOFER ATTENUATORS						
C_{RANGE}	Control Range		-53	-50	-47	dB
A_{STEP}	Step Resolution [2]		0.5	1	1.5	dB
A_{MUTE}	Output Mute Attenuation		80	90		dB
E_E	Attenuation Set Error				2	dB
V_{DC}	DC Steps	Adjacent Attenuation Steps		1	5	mV
DIFFERENTIAL OUTPUTS						
R_L	Load resistance at each output	$1V_{RMS}$; AC coupled; THD = 1%	1			kΩ
		$2V_{RMS}$; AC coupled; THD = 1%	2			kΩ
R_{DL}	Load resistance differential	1VRMS; AC coupled; THD = 1%	2			kΩ
		$2V_{RMS}$; AC coupled; THD = 1%	4			kΩ
C_L	Capacitive load at each output	CLMIN at each Output to Ground			470	pF
C_{LMAX}	Capacitive load at each output	C_{LMAX} at each Output to Ground			10	nF
C_{DLMAX}	Capacitive load differential	CLMAX between Output terminals			5	nF
V_{Offset}	DC Offset at pins	Output muted	-10		10	
R_{OUT}	Output Impedance			30	100	Ω
V_{DC}	DC Voltage Level		4.3	4.5	4.7	V
e_{NO}	Output Noise	Output muted		6	15	µV
COMPANDER						
G_{MAX}	Max. Compander Gain	V_i < -40dB		19		dB
				23		dB
t_{ATT}	Attack time	t_{Att1}		6		ms
		t_{Att2}		12		ms
		t_{Att3}		24		ms
		t_{Att4}		49		ms
t_{Rel}	Release time	t_{Rel1}		195		ms
		t_{Rel2}		390		ms
		t_{Rel3}		780		ms
		t_{Rel4}		1.56		s
V_{REF}	Compander Reference Input-Level (equals 0dB)	1kHz sine-wave		0.5		V_{RMS}
CF	Compression Factor	Output Signal/Input Signal		0.5		

2) Steps are increasing if the attenuation is higher than 24dB.

ELECTRICAL CHARACTERISTICS (continued)

Symbol	Parameter	Test Condition	Min.	Typ.	Max.	Unit
GENERAL						
e_{NO}	Output Noise	BW = 20 Hz to 20 KHz output muted		3	15	µV
		BW = 20 Hz to 20 KHz all gain = 0dB single ended inputs		10	20	µV
S/N	Signal to Noise Ratio	all gains = 0dB flat; $V_O = 2V_{RMS}$		106		dB
		bass treble at 12dB; a-weighted; $V_O = 2.6V_{RMS}$		100		dB
d	Distortion	$V_{IN} = 1V_{RMS}$; all stages 0dB		0.005	0.1	%
		$V_{IN} = 1V_{RMS}$; Bass & Treble = 12dB		0.05	0.1	%
S_C	Channel separation Left/Right		80	100		dB
E_T	Total Tracking Error	A_V = 0 to -20dB	-1	0	1	dB
		A_V = -20 to -60dB	-2	0	2	dB

MAIN FEATURES SUMMARY

Input Multiplexer

- One fully differential CD stereo input with switchable attenuation
- One quasi-differential stereo input
- Three single-ended stereo inputs
- One1 differential mono input
- In-Gain 0..15dB, 1dB step
- Internal Offsetcancellation (AutoZero)
- Separate source selector for rear channel

Beep

- Internal beep with 2 frequencies

Mixing stage

- 4 step-mixing stage with phone or rear-selector as mix-signals

Loudness

- Second order frequency response
- Programmable center frequency and quality factor
- 15 x 1dB attenuation steps
- Selectable flat-mode (constant attenuation)

Volume

- 0.5dB attenuion step
- 80dB control range
- Soft-step control with programmable times

Compander

- Dynamic range compression for use with CD source
- 2:1 compression rate
- Max. gain 15dB

Bass

- 2nd order frequency response
- Center frequency programmable in 4 steps
- DC gain programmable
- 15 x 1dB steps

Treble

- 2nd order frequency response
- Center frequency programmable in 4 steps
- 7 x 2dB steps

Voice Bandpass

- 2nd order Butterworth highpass filter with programmable cut-off frequency
- 2nd order butterworth lowpass filter with programmable cut-off frequency

Speaker

- Four independent speaker controls in 1dB steps
- Control range 50dB
- Separate Mute drive

Subwoofer

- Differential mono output
- Control range 50dB
- 2nd order lowpass filter

Mute Functions

Direct mute

Mute Functions

- Direct mute
- Digitally controlled softmute with 4 programmable mute times

Pause Detector

- Programmable threshold
- Delay time defined by external capacitor

FUNCTIONAL DESCRIPTION

Input Stages

Most of the input stages are similar to the others ST audioprocessors with exception of the CD inputs (see Figure 1). In fact there are some CD players in the market having a significant high source impedance which affects strongly on the common-mode rejection (CHRR) of the normal differential input stage. The additional buffer of the TDA7462 CD input avoids this drawback and

Figure 1. Input Stage

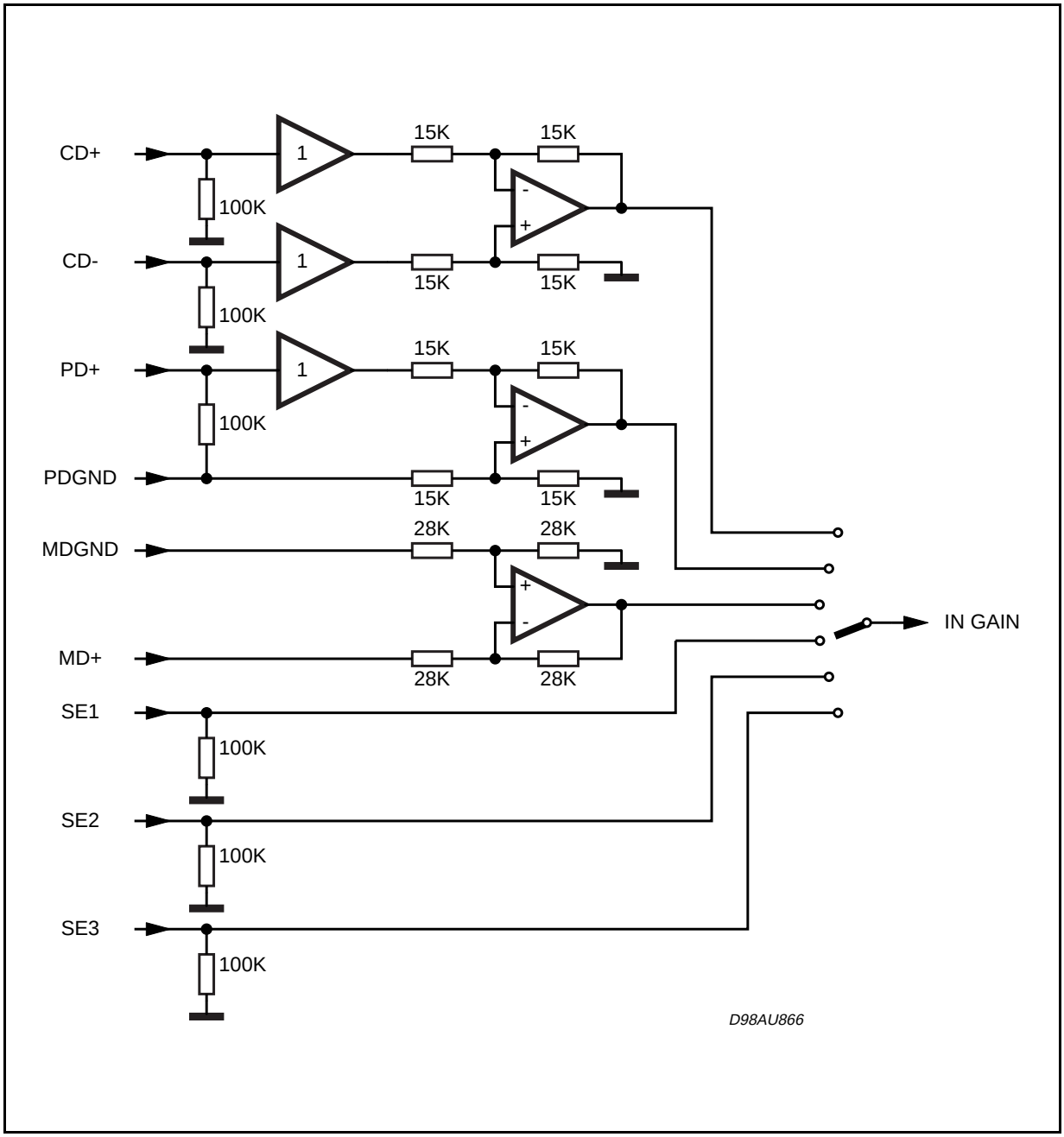

offers the full common-mode rejection even with those CD players.

AutoZero Stage

In order to reduce the number of pins there is no AC coupling between the In-Gain and the following stage, so that any offset generated by or before the stage would be transferred or even amplified to the output. To avoid that effect, a special offset cancellation stage called AutoZero is implemented. This stage is located before the mixing block to eliminate all offsets generated by the input and the In-Gain (notice that externally generated offsets, e.g. generated through the leakage current of the coupling capacitors, are not cancelled).

The auto-zeroing is started every time the databyte 0 is selected and takes a time of max. 0.3ms. To avoid audible clicking the audioprocessor is muted before the loudness stage during this time.

AutoZero Remain

In some cases, for example if the µP is executing a refresh cycle of the I^2C bus programming, it is not useful to start a new AutoZero action because no new source is selected and an undesired mute would appear at the outputs. For such applications the TDA7462 could be switched in the AutoZeroRemain mode. If this bit is set to high, the databyte 0 could be loaded without invoking the AutoZero and the old adjustment value remains.

Full Mixing Stage

The four-level mixing stage offers the possibility to mix the rear selector signal or the phone signal to any other source. Due to the fact that the mixing stage is located after the In-Gain stage fine adjustments of the main source level could be done in this way.

Figure 2. Signal Flow of Mixing Stage.

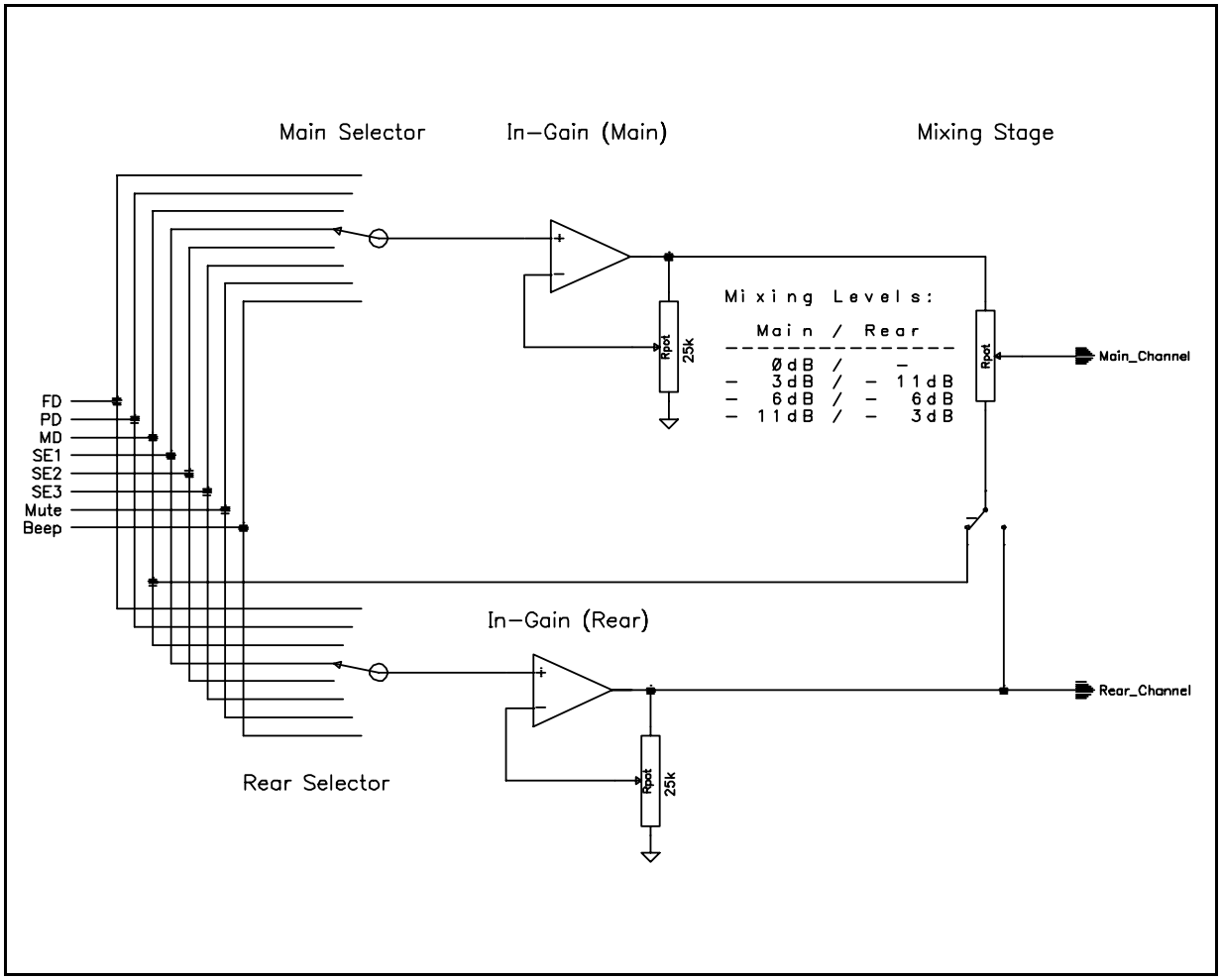

Figure 3. Loudness Attenuation @ fc = 400Hz (second order)

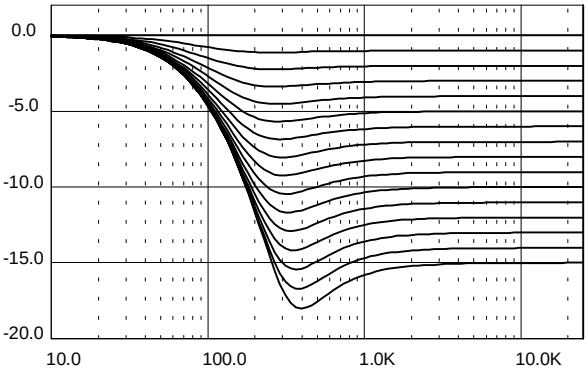

Figure 4. Loudness Center frequency @ Attn. = 15dB (second order)

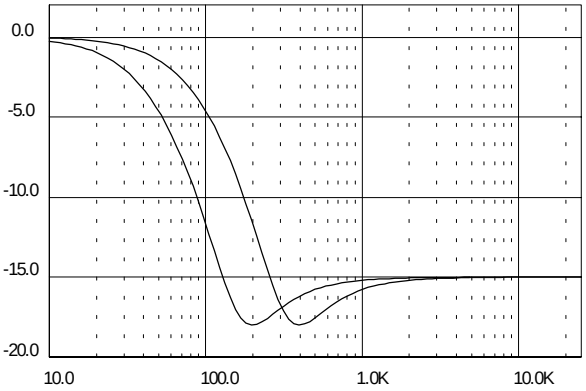

Figure 5. Loudness @ Attn. = 15dB, fc = 400Hz

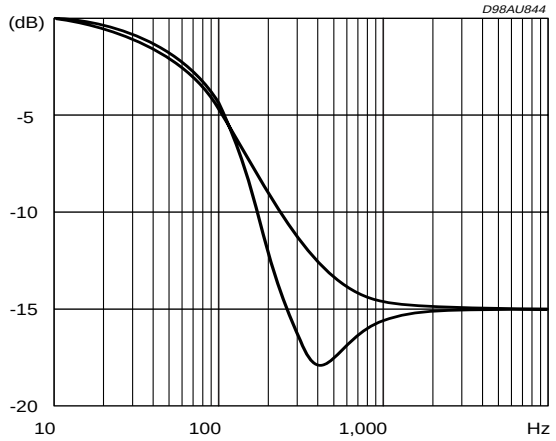

SoftMute

The digitally controlled SoftMute stage allows muting/de-muting the signal with a I^2C bus programmable slope. The mute process can either be activated by the SoftMute pin(SM) or by the I^2C bus. This slope is realized in a special S-shaped curve to mute slow in the critical regions (see Figure 6).

For timing purposes the Bit 3 of the I^2C bus output register is set to 1 from the start of muting until the end of de-muting.

Figure 6. Softmute Timing

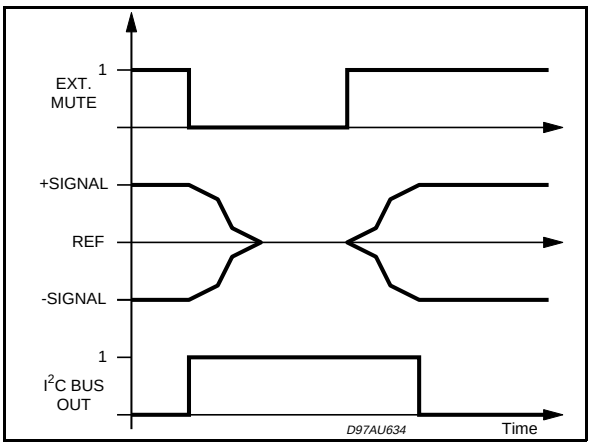

Note: Please notice that a started Mute action is always terminated and could not be interrupted by a change of the mute signal.

SoftStep Volume

When the volume level is changed audible clicks could appear at the output. The root cause of those clicks could either be a DC offset before the volume stage or the sudden change of the envelope of the audio signal. With the SoftStep feature both kinds of clicks could be reduced to a minimum and are no more audible. The blend time from one step to the next is programmable in four steps.

Figure 7. Soft Step Timing

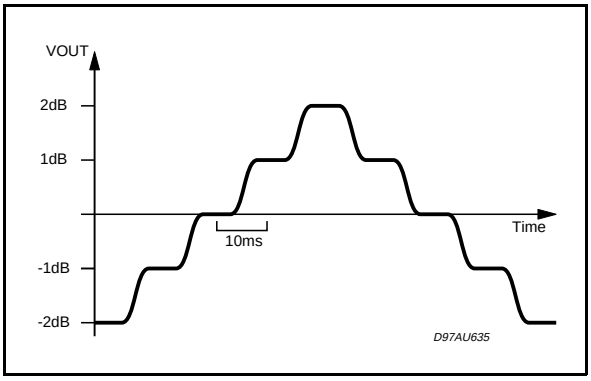

Note: For steps more than 1dB the softstep mode should be deactivated because it could generate a 1dB error during the blend-time

FILTER CHARACTERISTICS (BASS, TREBLE, VOICE-BAND)

Figure 8. Bass Control @ fc = 80Hz, Q = 1

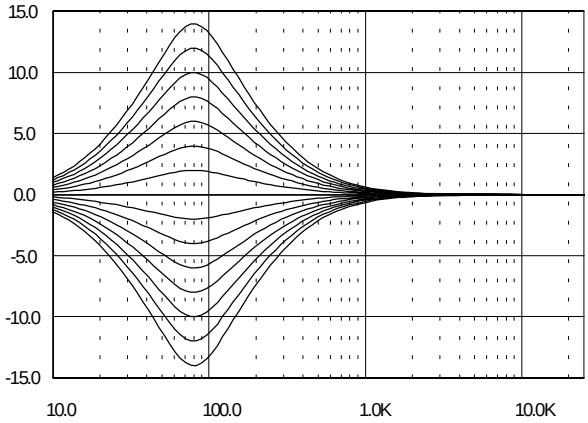

Figure 9. Bass Center @ Gain = 14dB, Q = 1

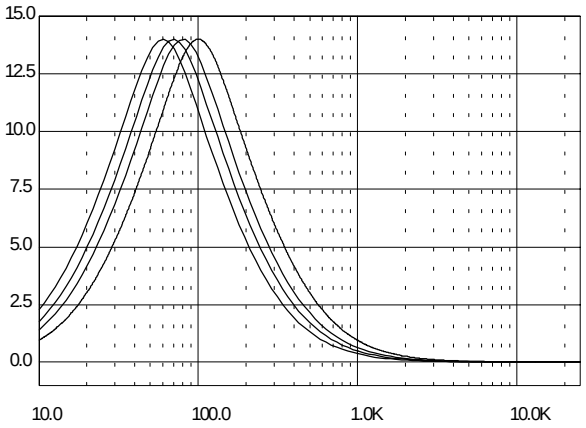

Figure 10. Bass Quality factors @ Gain = 14dB, fc = 80Hz

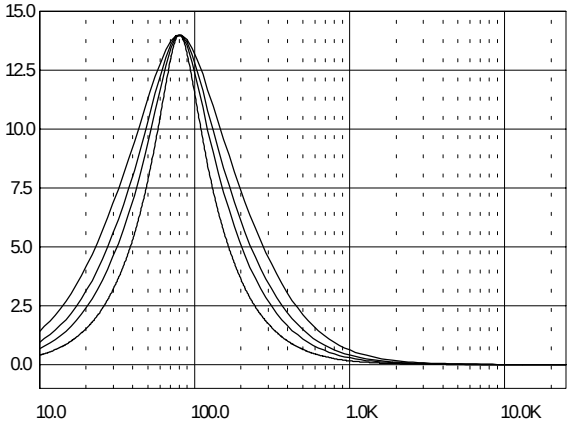

Figure 11. Bass normal and DC Mode @ Gain = 14dB, fc = 80Hz

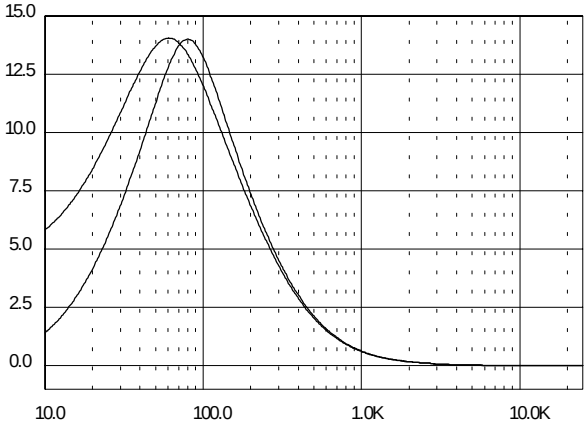

Note: The center frequency, Q and DC-mode can be set independently.

Figure 12. Treble Control @ fc = 17.5KHz

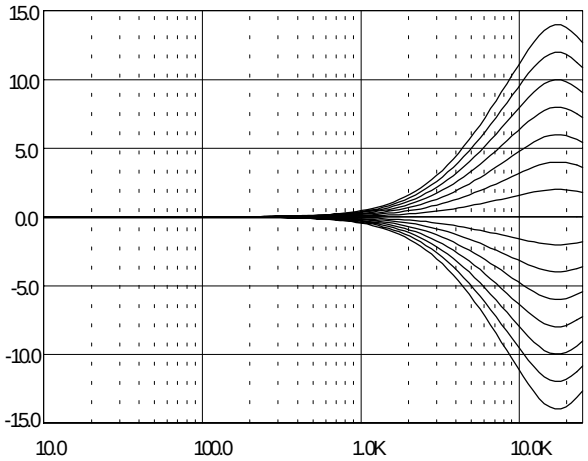

Figure 13. Treble Center Frequencies @ Gain = 14dB

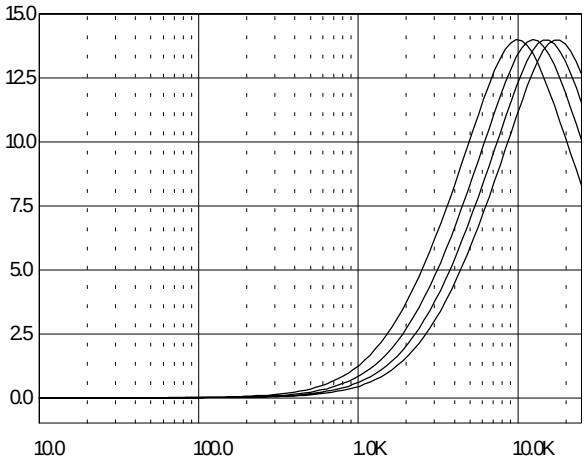

Subwoofer Application

Figure 14. Subwoofer Application with LPF 80/115Hz and HPF 90/130Hz

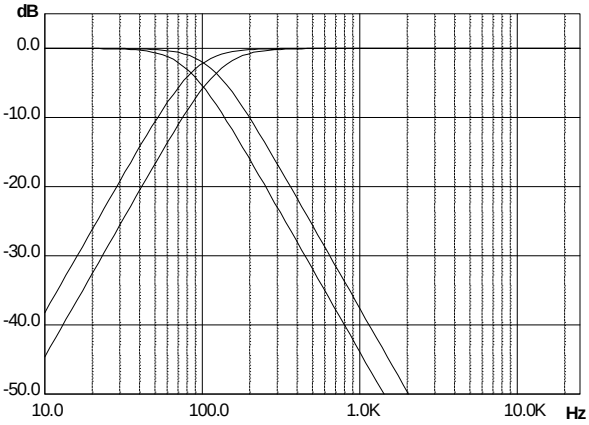

VoiceBand Application

Figure 15. VoiceBand Application with HPF 180/260Hz and LPF 3k/6kHz

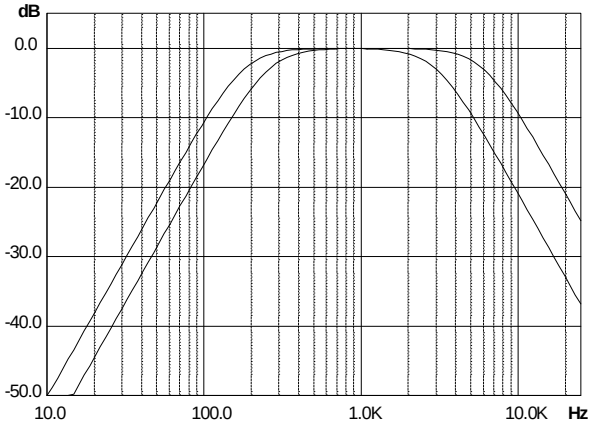

Figure 16. Switchable configuration for Front/Rear processing

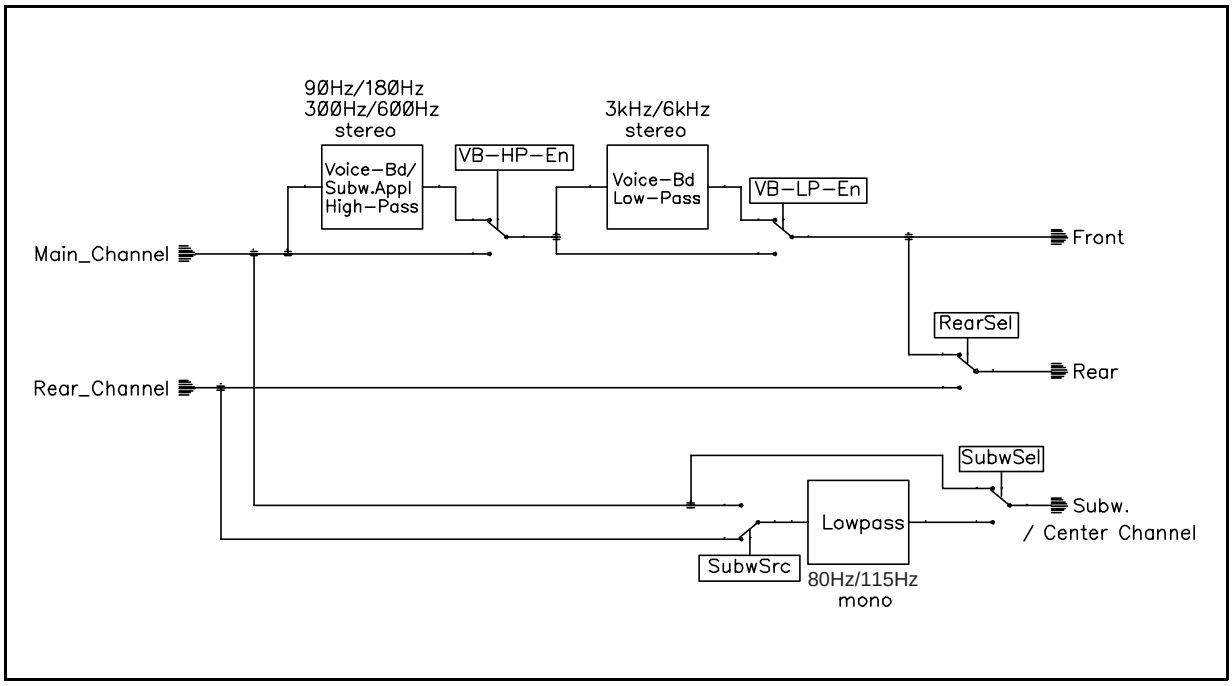

Speaker Attenuator

Due to practical aspects the steps in the speakerattenuators are not linear over the full range. At attenuations more than 24dB the steps increase from 1.5dB to 10dB (see data byte specification).

Subwoofer

The Subwoofer output is a differential mono output with 6dB gain. The outgoing signal generated by adding the left and the right channel. The attenuator is exactely the same like the other speakers.

In some applications it could be helpful to change the phase of this output by software. For this purpose a bit is available in the subwoofer byte to change the phase from 0° to 180°.

Compander Stage

To achieve the desired compression characteristic like shown below the volume has to be decreased by 4dB.

Figure 17. Compander Characteristics

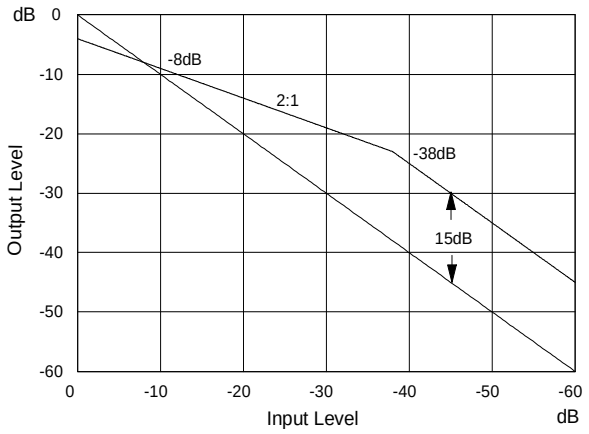

When the compander is working a volume word coming from this stage is added to the I^2C bus volume word and the volume is changed with a soft slope between adjacent steps. As mentioned in the description of this stage it is not recommended to change the volume during this slope. The compander-hold bit (Bit 7 in the subaddress-byte) is present to implement the volume change more easily. The recommended sequence for changing the volume level when compander feature is on is the following:

1. Set the compander-hold bit
2. Wait the actual SoftStep time
3. Change the volume
4. Reset the compander-hold bit

The SoftStep times are (in compander ON condition) automatically adapted to the attach time of the Compander. In the following table the related SoftStep times are shown:

Attack-Time	SoftStep Time
6ms	0.16ms
12ms	0.32ms
24ms	0.64ms
48ms	1.28ms

I²C BUS INTERFACE DESCRIPTION

Interface Protocol

The interface protocol comprises:

- a start condition (S)
- a chip address byte (the LSB bit determines read / write transmission)
- a subaddress byte
- a sequence of data (N-bytes + acknowledge)
- a stop condition (P)
- the max. Clock Speed is 500kbits/s

CHIP ADDRESS										SUBADDRESS									DATA 1 ... DATA n								
8 Bit										8 Bit									8 Bit								
MSB							LSB			MSB							LSB		MSB							LSB	
S	1	0	0	0	1	0	0	R/W	ACK	I_3	I_2	I_1	I_0	A_3	A_2	A_1	A_0	ACK				DATA				ACK	P

S = Start

R/W = "0" -> Receive Mode (Chip could be programmed by µP)

"1" -> Transmission Mode (Data could be received by µP)

ACK = Acknowledge

P = Stop

TRANSMITTED DATA (send mode)

MSB							LSB
X	X	X	X	ST	SM	X	X

SM = Soft mute activated

ST = Stereo

X = Not Used

The transmitted data is automatic updated after each ACK. Transmission can be repeated without new chipaddress.

Reset Condition

A Power On reset (POR) is invoked if the supply voltage is below than 3.5V. After that the following data is written automatically into the registers of all subaddresses:

MSB							LSB
1	1	1	1	1	1	1	0

The programming after POR is marked bold-face / underlined in the programming tables.

With this programming all the outputs are muted to V_{REF} ($V_{OUT} = V_{DD}/2$).

SUBADDRESS (receive mode)

MSB							**LSB**	**FUNCTION**
I3	I2	I1	I0	A3	A2	A1	A0	
0 1								**Compander Hold**[1] off on
	0 1							**AutoZero Remain**[2] off on
		0 1						**Testmode**[3] off on
			0 1					**Auto-Increment Mode**[4] off on
				0	0	0	0	Main Selector
				0	0	0	1	Main Loudness
				0	0	1	0	Volume
				0	0	1	1	Bass-Config./Treble
				0	1	0	0	Bass
				0	1	0	1	Speaker attenuator LF
				0	1	1	0	Speaker attenuator RF
				0	1	1	1	Rear Selector
				1	0	0	0	Rear Loudness
				1	0	0	1	Speaker attenuator LR
				1	0	1	0	Speaker attenuator RR
				1	0	1	1	Subwoofer
				1	1	0	0	SoftMute/Mixing
				1	1	0	1	Compander
				1	1	1	0	Configuration
				1	1	1	1	Testing

[1]For more information see Compander section
[2]For more information see AutoZero section
[3]For more information see Test Programming block
[4]If this bit is set to "1", the subaddress is automatically incremented after the transmission of a data-byte. Therefore a transmission of more than one byte without sending the new subaddress is possible.

DATA BYTE SPECIFICATION
Main Selector

MSB							LSB	FUNCTION
D7	D6	D5	D4	D3	D2	D1	D0	
								Source Selector
					0	0	0	Mono Differential
					0	0	1	Single Ended 1
					0	1	0	Full Differential
					0	1	1	Single Ended 2
					1	0	0	Pseudo Differential
					1	0	1	Single Ended 3
					1	1	0	Mute
					1	1	1	beep
								Input Gain
	1	1	1	1				15dB
	1	1	1	0				14dB
	:	:	:	:				:
	0	0	0	1				1dB
	0	0	0	0				0dB
								Pause Source Selector
0								Single Ended 3
1								Pseudo Differential

Main Loudness

MSB							LSB	LOUDNESS
D7	D6	D5	D4	D3	D2	D1	D0	
								Attenuation
				0	0	0	0	0dB
				0	0	0	1	-1dB
				:	:	:	:	:
				1	1	1	0	-14dB
				1	1	1	1	-15dB
								Filter
			0					on
			1					off (flat)
								Center Frequency
		0						400Hz
		1						800Hz
								Loudness Q
	0							First order
	1							Second order
								SoftStep Volume
0								off
1								on

Note: The attenuation is specified at high frequencies. Around the center frequency the value is different depending on the programmed attenuation (see Loudness frequency response).

Volume

MSB							LSB	ATTENUATION
D7	D6	D5	D4	D3	D2	D1	D0	
								Gain/Attenuation
0	0	0	0	0	0	0	0	+32.0dB (Note)
0	0	0	0	0	0	0	1	+31.5dB
:	:	:	:	:	:	:	:	:
0	0	0	1	1	0	0	0	+20.0dB
0	0	0	1	1	0	0	1	+19.5dB
0	0	0	1	1	0	1	0	+19.0dB
:	:	:	:	:	:	:	:	:
0	0	1	1	1	1	1	1	+0.5dB
0	1	0	0	0	0	0	0	0.0dB
0	1	0	0	0	0	0	1	- 0.5dB
:	:	:	:	:	:	:	:	:
1	1	0	1	1	1	1	0	-79.0dB
1	1	0	1	1	1	1	1	-79.5dB

Note: It is not recommended to use a gain more than 20dB for system performance reason. In general, the max. gain should be limited by software to the maximum value, which is needed for the system.

Bass Configuration. & Treble Programming

MSB							LSB	BASS & TREBLE ATTENUATION
D7	D6	D5	D4	D3	D2	D1	D0	
								Treble Steps
				0	0	0	0	-14dB
				0	0	0	1	-12dB
				:	:	:	:	:
				0	1	1	0	-2dB
				0	1	1	1	0dB
				1	1	1	1	0dB
				1	1	1	0	+2dB
				:	:	:	:	:
				1	0	0	1	+12dB
				1	0	0	0	+14dB
								Treble Center Frequency
		0	0					10.kHz
		0	1					12.5kHz
		1	0					15.0kHz
		1	1					17.5kHz
								Bass Center Frequency
0	0							60Hz
0	1							70Hz
1	0							80Hz
1	1							100Hz

Bass Programming

MSB							LSB	BASS ATTENUATION
D7	D6	D5	D4	D3	D2	D1	D0	
								Bass Steps
			0	0	0	0	0	-15dB
			0	0	0	0	0	-14dB
			:	:	:	:	:	:
			0	1	1	1	0	-1 dB
			0	1	1	1	1	0 dB
			1	1	1	1	1	0 dB
			1	1	1	1	0	+1 dB
			:	:	:	:	:	:
			1	0	0	0	1	+14dB
			1	0	0	0	0	+15dB
								Bass Q Factor
	0	0						1
	0	1						1.25
	1	0						1.5
	1	1						2
								Bass DC-Mode
0								off
1								on

Note: For more information please refer to section Bass description

Speaker Attenuation Front (left & right channel)

MSB							LSB	ATTENUATION/BASS CF
D7	D6	D5	D4	D3	D2	D1	D0	
								Attenuation
		0	0	0	0	0	0	0dB
		0	0	0	0	0	1	-1dB
		:	:	:	:	:	:	:
		0	1	0	1	1	1	-23dB
		0	1	1	0	0	0	-24.5dB
		0	1	1	0	0	1	-26dB
		0	1	1	0	1	0	-28dB
		0	1	1	1	1	1	-30dB
		0	1	1	1	0	0	-32dB
		0	1	1	1	0	1	-35dB
		0	1	1	1	1	0	-40dB
		0	1	1	1	1	1	-50dB
		1						Speaker Mute
								Bass Center-Frequency (only Speaker LF) [1)]
	0							Bass 150Hz
	1							Bass 100Hz

For this Bass Center-Frequency must be programmed to 100Hz

Rear Selector

MSB							LSB	FUNCTION
D7	D6	D5	D4	D3	D2	D1	D0	
								Source Selector
					0	0	0	Mono Differential
					0	0	1	Single Ended 1
					0	1	0	Full Differential
					0	1	1	Single Ended 2
					1	0	0	Pseudo Differential
					1	0	1	Single Ended 3
					1	1	0	Mute
					1	1	1	Beep
								Input Gain
	1	1	1	1				15dB
	1	1	1	0				14dB
	:	:	:	:				:
	0	0	0	1				1dB
	0	0	0	0				0dB
1								must be "1"

Rear Loudness

MSB							LSB	FUNCTION
D7	D6	D5	D4	D3	D2	D1	D0	
								Attenuation
				0	0	0	0	0dB
				0	0	0	0	-1dB
				:	:	:	:	:
				1	1	1	1	-14dB
				1	1	1	1	-15dB
								Filter
			0					on
			1					off
								Center Frequency
		0						400Hz
		1						800Hz
								Loudness Order
	0							First Order
	1							Second Order
								Beep Frequency
0								781Hz
1								1.56kHz

Note: The programming of the Main- and Rear-Selector as well as the Main- and Rear-Loudness is exactly the same, except the MSB's.

Speaker Attenuation Rear (left & right channel)

MSB							LSB	FUNCTION
D7	D6	D5	D4	D3	D2	D1	D0	
								Atenuation
		0	0	0	0	0	0	0dB
		0	0	0	0	0	1	-1dB
		:	:	:	:	:	:	:
		0	1	0	1	1	1	-23dB
		0	1	1	0	0	0	-24.5dB
		0	1	1	0	0	1	-26dB
		0	1	1	0	1	0	-28dB
		0	1	1	0	1	1	-30dB
		0	1	1	1	0	0	-32dB
		0	1	1	1	0	1	-35dB
		0	1	1	1	1	0	-40dB
		0	1	1	1	1	1	-50dB
		1						Speaker Mute
								Input Signal for Rear Speaker (only Spkr LR)[1)]
	0							Rear Channel
	1							Main Channel
								Subw. Low-Pass Frequency (only Spkr RR)
	0							80Hz
	1							115Hz
								Input Signal for Subwoofer (only Spkr RR)[2)]
0								Rear Channel
1								Main Channel

[1)] see Figure 16 Switch RearSel
[2)] see Figure 16 Switch SubwSel

Subwoofer

MSB							LSB	FUNCTION
D7	D6	D5	D4	D3	D2	D1	D0	
								Attenuation
		0	0	0	0	0	0	0dB
		0	0	0	0	0	1	-1dB
		:	:	:	:	:	:	:
		0	1	0	1	1	1	-23dB
		0	1	1	0	0	0	-24.5dB
		0	1	1	0	0	1	-26dB
		0	1	1	0	1	0	-28dB
		0	1	1	1	1	1	-30dB
		0	1	1	1	0	0	-32dB
		0	1	1	1	0	1	-35dB
		0	1	1	1	1	0	-40dB
		0	1	1	1	1	1	-50dB
		1						Speaker Mute
								Subwoofer Phase
	0							180°
	1							0°
								Subwoofer Low-Pass Filter
0								off
1								on

SoftMute and Mixing

MSB							LSB	FUNCTION
D7	D6	D5	D4	D3	D2	D1	D0	
								Mute
							0	enable SoftMute
							1	disable SoftMute
								Mute Times
					0	0		0.48ms
					0	1		0.96ms
					1	0		30.7ms
					1	1		122.8ms
								Mixing Source
				0				Rear-Selector
				1				Phone
								Mixing Level (Main/Mix-Source)
		0	0					-12/-2.5dB
		0	1					-6/-6dB
		1	0					-3.5/-9.6dB
		1	1					0/∞
								CD Full-Differential Gain
0	0							-12dB
0	1							-6dB
1	0							-6dB
1	1							0dB

Compander

MSB							LSB	FUNCTION
D7	D6	D5	D4	D3	D2	D1	D0	
								Activity
							0	off
							1	on
								Attack Times
					0	0		6ms
					0	1		12ms
					1	0		24ms
					1	1		49ms
								Release Times
			0	0				195ms
			0	1				390ms
			1	0				780ms
			1	1				1.56s
								SoftStep Time [1]
0					0	0		160µs
0					0	1		320µs
0					1	0		640µs
0					1	1		1.28ms
1			0	0				2.56ms
1			0	1				5.12ms
1			1	0				10.2ms
1			1	1				20.4ms
								Max. Compander Gain
		0						23dB
		1						19dB
								Compander Input
	0							Rear Selector (after Rear InGain)
	1							Front Selector (after Front InGain)

1) Only possible if the Compander is off (Bit D0 set to 0)

Configuration

MSB							LSB	FUNCTION
D7	D6	D5	D4	D3	D2	D1	D0	
								Pause Detector
							0	off
							1	on
								Pause ZC Window
					0	0		160mV
					0	1		80mV
					1	0		40mV
					1	1		20mV
								Voice-Band Low-Pass Enable
				0				Filter off
				1				Filter on
								Voice-Band Low-Pass Frequency
			0					3kHz
			1					6kHz
								Voice-Band High-Pass Enable
		0						Filter off
		1						Filter on
								High-Pass Cut-Off-Frequency
0	0							90Hz
0	1							180Hz
1	0							130Hz
1	1							260Hz

Testing

MSB							LSB	FUNCTION
D7	D6	D5	D4	D3	D2	D1	D0	
							0 1	**Main Testmode Switch** [1)] off on
				0 0 0 0 1 1 1 1	0 0 1 1 0 0 1 1	0 1 0 1 0 1 0 1		**Test Multiplexer** Compander Log-Amp. Output Compander Low-Pass Output Compander DAC Output internal 200kHz Clock not allowed not allowed internal Bandgap Voltage not allowed
			0 1					**Compander Testmode** off on
		0 1						**Clock** external internal
1	1							must be "1"

1) To avoid inadvertently programming of the Main-Testmode as well the Compander testmode it is mandatory to set the Bit 5 in the subaddress-byte to high at the same time.

Figure 18. Application Circuit.

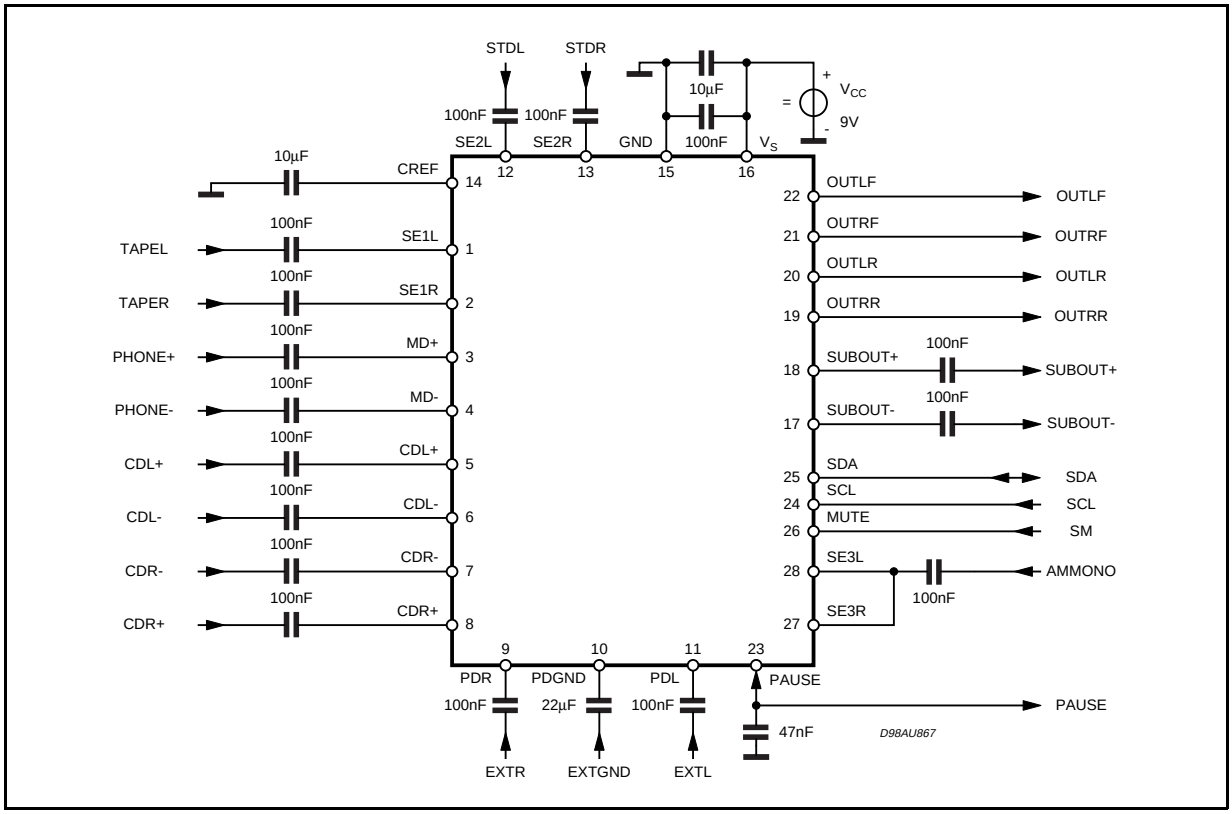

DIM.	mm			inch		
	MIN.	TYP.	MAX.	MIN.	TYP.	MAX.
A			2.65			0.104
a1	0.1		0.3	0.004		0.012
b	0.35		0.49	0.014		0.019
b1	0.23		0.32	0.009		0.013
C		0.5			0.020	
c1	45° (typ.)					
D	17.7		18.1	0.697		0.713
E	10		10.65	0.394		0.419
e		1.27			0.050	
e3		16.51			0.65	
F	7.4		7.6	0.291		0.299
L	0.4		1.27	0.016		0.050
S	8 ° (max.)					

OUTLINE AND MECHANICAL DATA

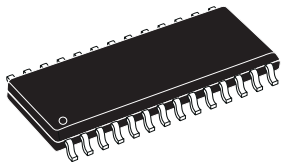

SO28