ECCM1E-20-16.000M TR

ECCM1 E -20 -16.000M TR

Series
RoHS Compliant (Pb-free) 5.0mm x 7.0mm Ceramic SMD Crystal

Frequency Tolerance/Stability
±30ppm at 25°C, ±50ppm over -40°C to +85°C

Mode of Operation
AT-Cut Fundamental

Load Capacitance
20pF Parallel Resonant

Nominal Frequency
16.000MHz

Packaging Options
Tape & Reel

ELECTRICAL SPECIFICATIONS

Nominal Frequency	16.000MHz
Frequency Tolerance/Stability	±30ppm at 25°C, ±50ppm over -40°C to +85°C
Aging at 25°C	±3ppm/year Maximum
Load Capacitance	20pF Parallel Resonant
Shunt Capacitance (C0)	7pF Maximum
Equivalent Series Resistance	30 Ohms Maximum
Mode of Operation	AT-Cut Fundamental
Drive Level	50µWatts Maximum, 50µWatts Correlation
Spurious Response	-3dB Minimum (Measured from Fo to Fo +5000ppm)
Storage Temperature Range	-40°C to +85°C
Insulation Resistance	500 Megaohms Minimum (Measured at 100Vdc)

ENVIRONMENTAL & MECHANICAL SPECIFICATIONS

ESD Susceptibility	MIL-STD-883, Method 3015, Class 1, HBM: 1500V
Fine Leak Test	MIL-STD-883, Method 1014, Condition A
Flammability	UL94-V0
Gross Leak Test	MIL-STD-883, Method 1014, Condition C
Mechanical Shock	MIL-STD-883, Method 2002, Condition B
Moisture Resistance	MIL-STD-883, Method 1004
Moisture Sensitivity	J-STD-020, MSL 1
Resistance to Soldering Heat	MIL-STD-202, Method 210, Condition K
Resistance to Solvents	MIL-STD-202, Method 215
Solderability	MIL-STD-883, Method 2003
Temperature Cycling	MIL-STD-883, Method 1010, Condition B
Vibration	MIL-STD-883, Method 2007, Condition A

MECHANICAL DIMENSIONS (all dimensions in millimeters)

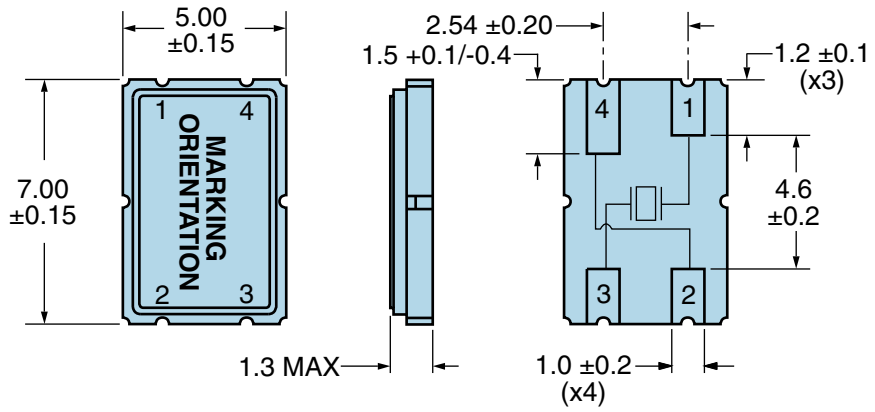

Note: Chamfer not shown.

PIN	CONNECTION
1	Crystal
2	Cover/Ground
3	Crystal
4	Cover/Ground

LINE	MARKING
1	**E16.00** *E=Ecliptek Designator*
2	**XXXXX** *XXXXX=Ecliptek Manufacturing Identifier*

Suggested Solder Pad Layout

All Dimensions in Millimeters

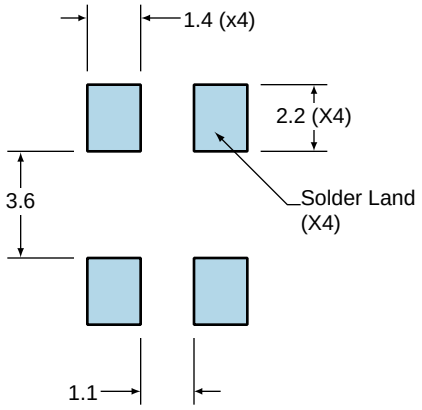

All Tolerances are ±0.1

ECCM1E-20-16.000M TR

Tape & Reel Dimensions

Quantity Per Reel: 1,000 units

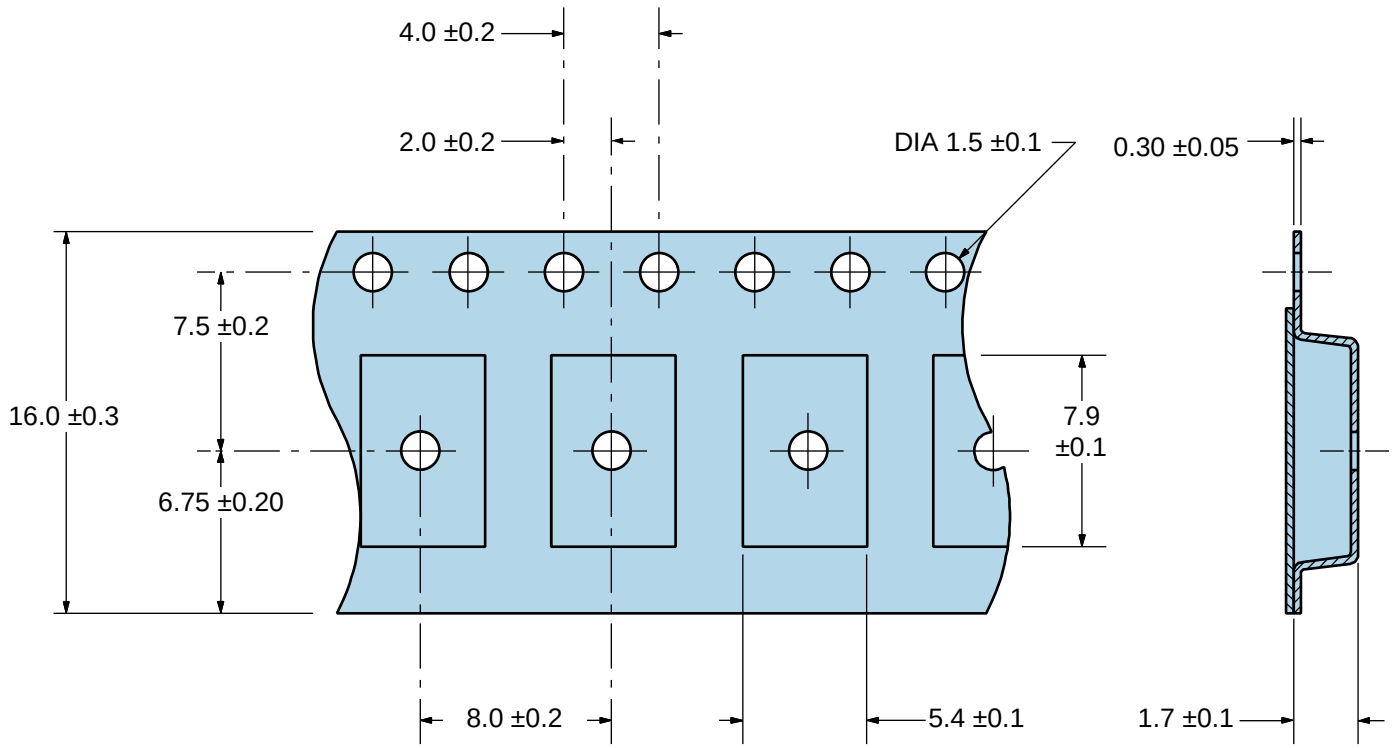

*Compliant to EIA 481A

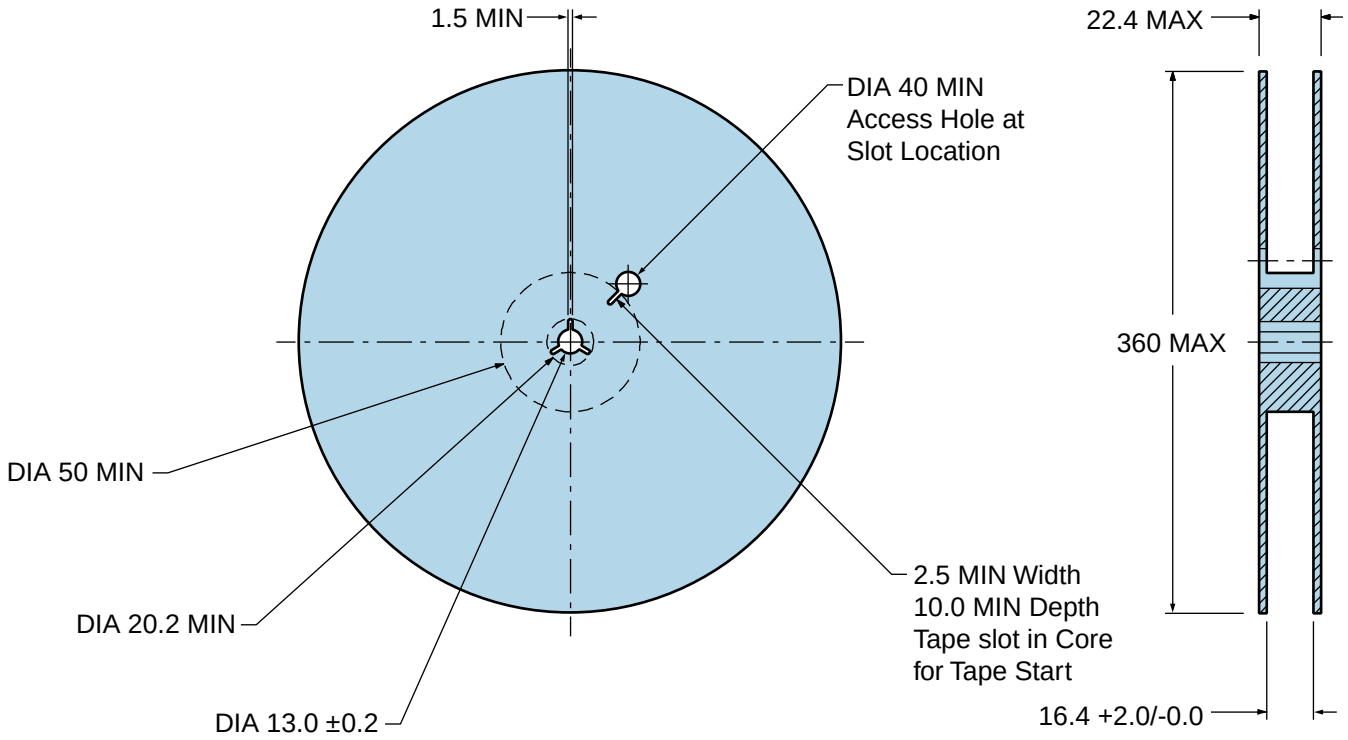

ECCM1E-20-16.000M TR

Recommended Solder Reflow Methods

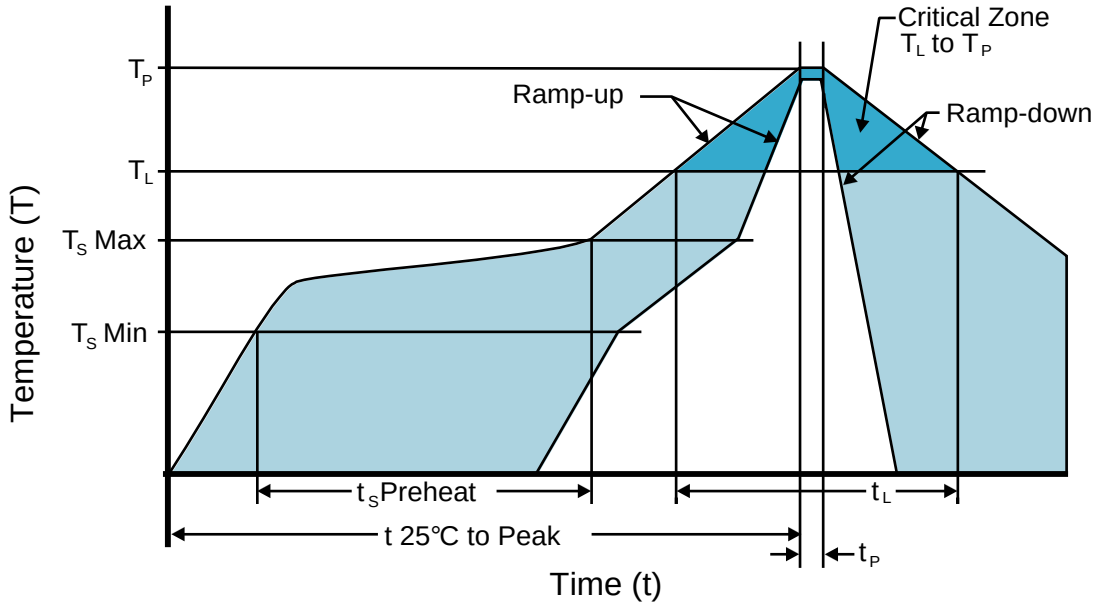

High Temperature Infrared/Convection

T_S MAX to T_L (Ramp-up Rate)	3°C/second Maximum
Preheat	
- Temperature Minimum (T_S MIN)	150°C
- Temperature Typical (T_S TYP)	175°C
- Temperature Maximum (T_S MAX)	200°C
- Time (t_S MIN)	60 - 180 Seconds
Ramp-up Rate (T_L to T_P)	3°C/second Maximum
Time Maintained Above:	
- Temperature (T_L)	217°C
- Time (t_L)	60 - 150 Seconds
Peak Temperature (T_P)	260°C Maximum for 10 Seconds Maximum
Target Peak Temperature (T_P Target)	250°C +0/-5°C
Time within 5°C of actual peak (t_p)	20 - 40 seconds
Ramp-down Rate	6°C/second Maximum
Time 25°C to Peak Temperature (t)	8 minutes Maximum
Moisture Sensitivity Level	Level 1

ECCM1E-20-16.000M TR

Recommended Solder Reflow Methods

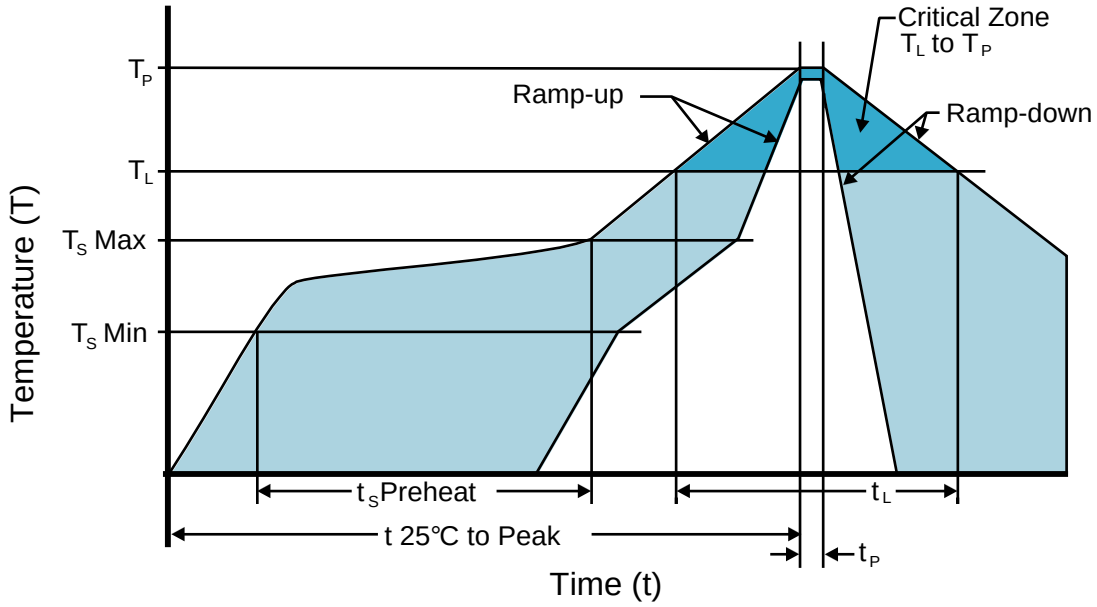

Low Temperature Infrared/Convection 240°C

T_S MAX to T_L (Ramp-up Rate)	5°C/second Maximum
Preheat	
- Temperature Minimum (T_S MIN)	N/A
- Temperature Typical (T_S TYP)	150°C
- Temperature Maximum (T_S MAX)	N/A
- Time (t_S MIN)	60 - 120 Seconds
Ramp-up Rate (T_L to T_P)	5°C/second Maximum
Time Maintained Above:	
- Temperature (T_L)	150°C
- Time (t_L)	200 Seconds Maximum
Peak Temperature (T_P)	240°C Maximum
Target Peak Temperature (T_P Target)	240°C Maximum 1 Time / 230°C Maximum 2 Times
Time within 5°C of actual peak (t_p)	10 seconds Maximum 2 Times / 80 seconds Maximum 1 Time
Ramp-down Rate	5°C/second Maximum
Time 25°C to Peak Temperature (t)	N/A
Moisture Sensitivity Level	Level 1

Low Temperature Manual Soldering

185°C Maximum for 10 seconds Maximum, 2 times Maximum.

High Temperature Manual Soldering

260°C Maximum for 5 seconds Maximum, 2 times Maximum.