EH3645TTS-10.000M

EH36 45 T TS -10.000M

Series
RoHS Compliant (Pb-free) 3.3V 4 Pad 3.2mm x 5mm
Ceramic SMD LVCMOS High Frequency Oscillator

Frequency Tolerance/Stability
±50ppm Maximum

Operating Temperature Range
0°C to +70°C

Duty Cycle
50 ±5(%)

Pin 1 Connection
Tri-State (High Impedance)

Nominal Frequency
10.000MHz

ELECTRICAL SPECIFICATIONS

Nominal Frequency	10.000MHz
Frequency Tolerance/Stability	±50ppm Maximum (Inclusive of all conditions: Calibration Tolerance at 25°C, Frequency Stability over the Operating Temperature Range, Supply Voltage Change, Output Load Change, 1st Year Aging at 25°C, Shock, and Vibration)
Aging at 25°C	±5ppm/year Maximum
Operating Temperature Range	0°C to +70°C
Supply Voltage	3.3Vdc ±0.3Vdc
Input Current	35mA Maximum (No Load)
Output Voltage Logic High (Voh)	2.7Vdc Minimum (IOH = -8mA)
Output Voltage Logic Low (Vol)	0.5Vdc Maximum (IOL = +8mA)
Rise/Fall Time	6nSec Maximum (Measured at 20% to 80% of waveform)
Duty Cycle	50 ±5(%) (Measured at 50% of waveform)
Load Drive Capability	30pF Maximum
Output Logic Type	CMOS
Pin 1 Connection	Tri-State (High Impedance)
Tri-State Input Voltage (Vih and Vil)	70% of Vdd Minimum to enable output, 20% of Vdd Maximum to disable output, No Connect to enable output.
Absolute Clock Jitter	±250pSec Maximum, ±100pSec Typical
One Sigma Clock Period Jitter	±50pSec Maximum, ±40pSec Typical
Start Up Time	10mSec Maximum
Storage Temperature Range	-55°C to +125°C

ENVIRONMENTAL & MECHANICAL SPECIFICATIONS

Fine Leak Test	MIL-STD-883, Method 1014, Condition A
Gross Leak Test	MIL-STD-883, Method 1014, Condition C
Mechanical Shock	MIL-STD-202, Method 213, Condition C
Resistance to Soldering Heat	MIL-STD-202, Method 210
Resistance to Solvents	MIL-STD-202, Method 215
Solderability	MIL-STD-883, Method 2003
Temperature Cycling	MIL-STD-883, MEthod 1010
Vibration	MIL-STD-883, Method 2007, Condition A

EH3645TTS-10.000M

MECHANICAL DIMENSIONS (all dimensions in millimeters)

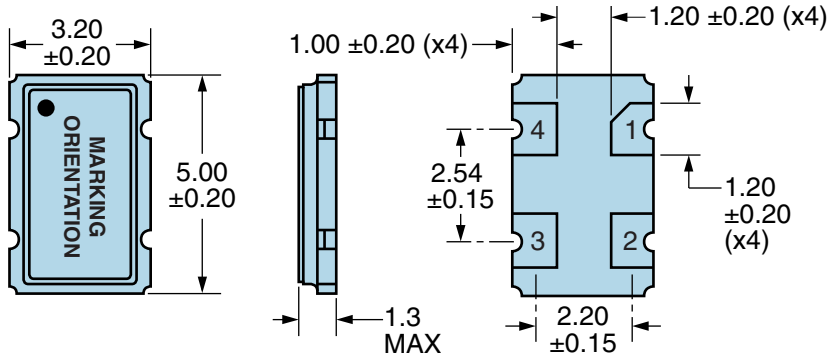

PIN	CONNECTION
1	Tri-State
2	Ground/Case Ground
3	Output
4	Supply Voltage

LINE	MARKING
1	**E10.000** *E=Ecliptek Designator*

Suggested Solder Pad Layout

All Dimensions in Millimeters

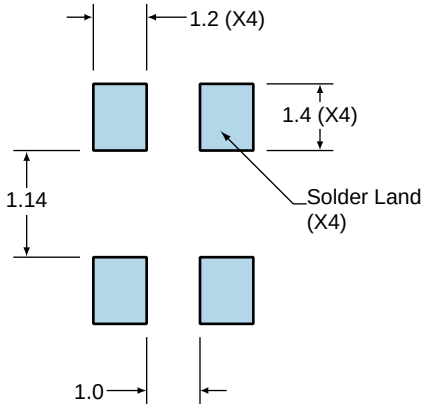

All Tolerances are ±0.1

OUTPUT WAVEFORM & TIMING DIAGRAM

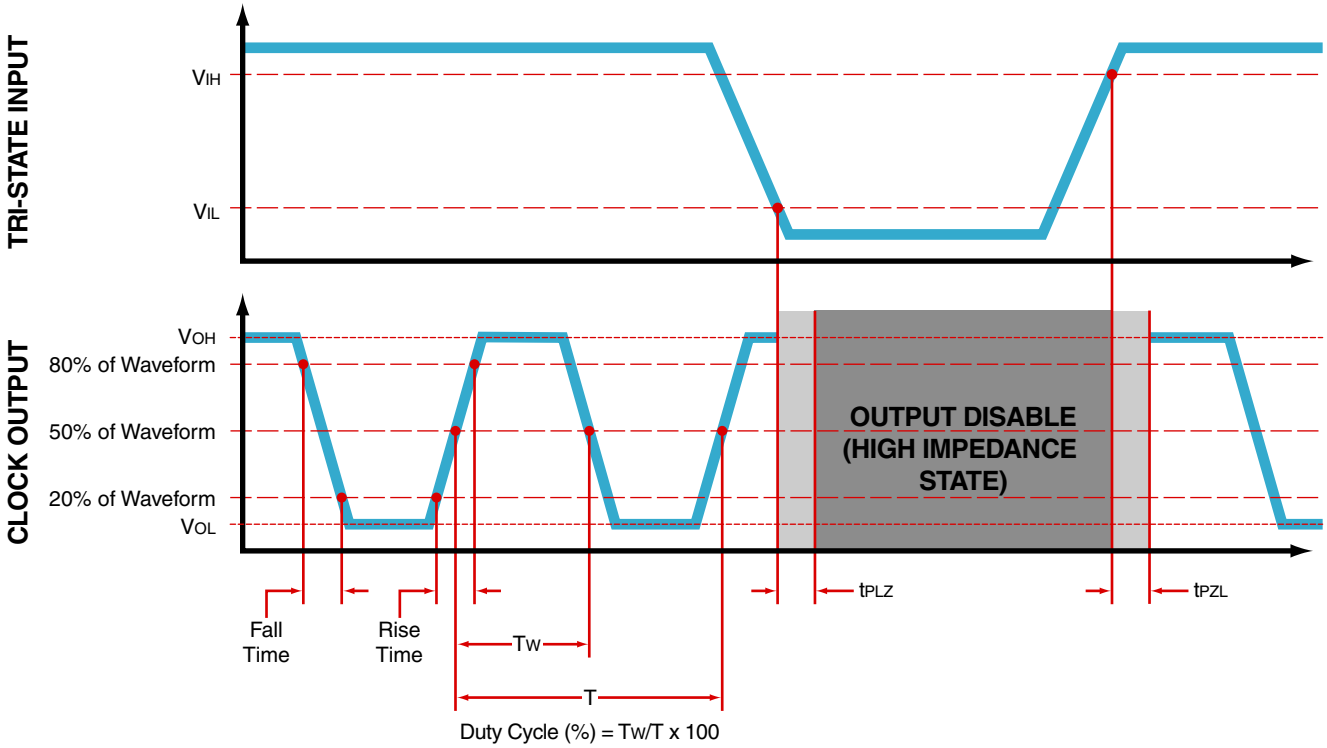

Test Circuit for CMOS Output

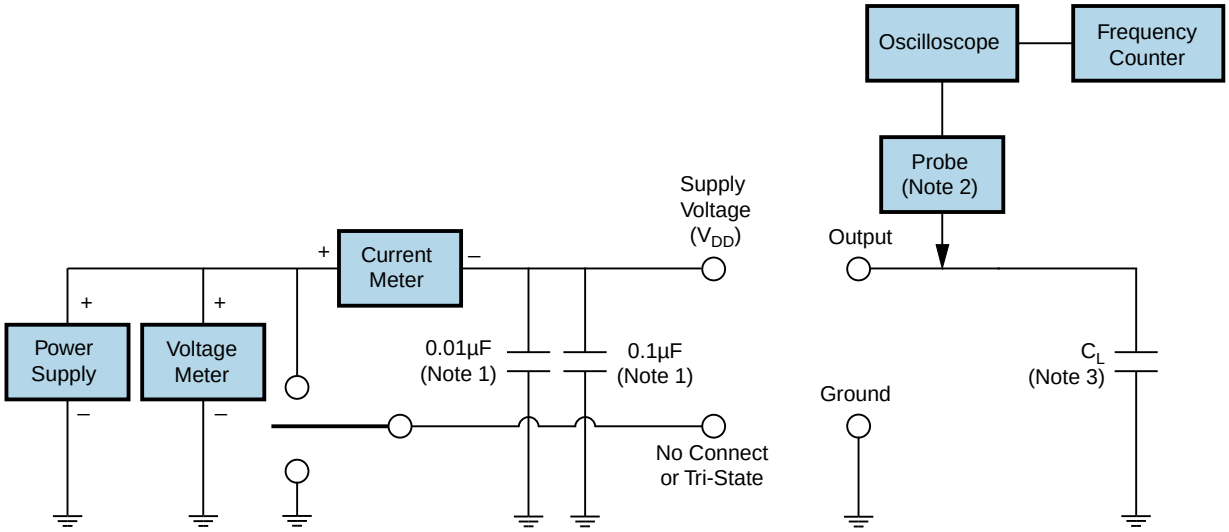

Note 1: An external 0.1µF low frequency tantalum bypass capacitor in parallel with a 0.01µF high frequency ceramic bypass capacitor close to the package ground and V_{DD} pin is required.
Note 2: A low capacitance (<12pF), 10X attenuation factor, high impedance (>10Mohms), and high bandwidth (>300MHz) passive probe is recommended.
Note 3: Capacitance value C_L includes sum of all probe and fixture capacitance.

Recommended Solder Reflow Methods

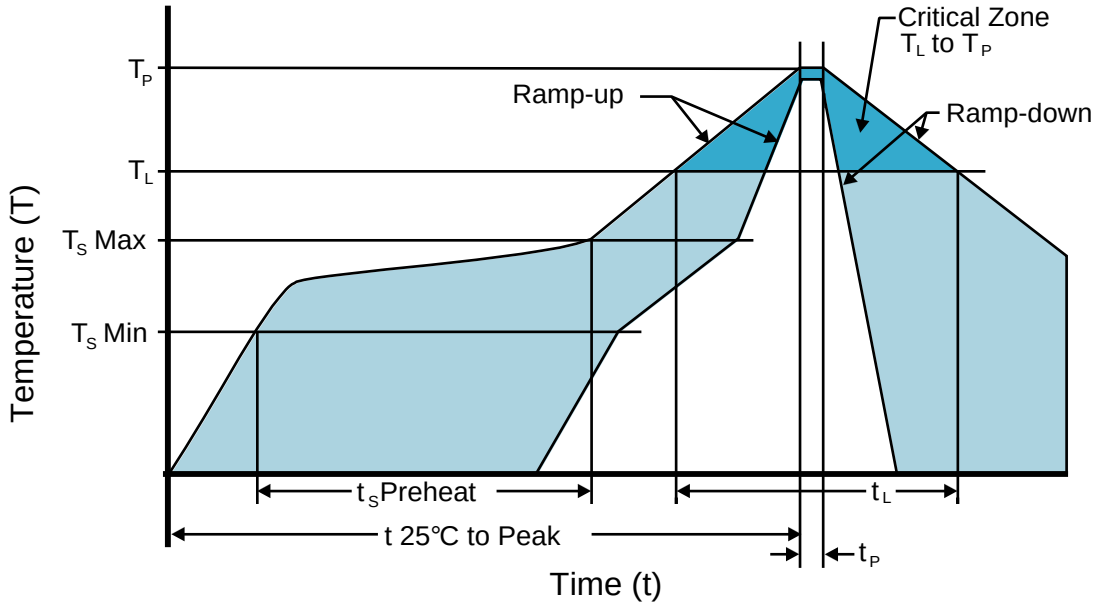

High Temperature Infrared/Convection

T_S MAX to T_L (Ramp-up Rate)	3°C/second Maximum
Preheat **- Temperature Minimum (T_S MIN)** **- Temperature Typical (T_S TYP)** **- Temperature Maximum (T_S MAX)** **- Time (t_S MIN)**	 150°C 175°C 200°C 60 - 180 Seconds
Ramp-up Rate (T_L to T_P)	3°C/second Maximum
Time Maintained Above: **- Temperature (T_L)** **- Time (t_L)**	 217°C 60 - 150 Seconds
Peak Temperature (T_P)	260°C Maximum for 10 Seconds Maximum
Target Peak Temperature (T_P Target)	250°C +0/-5°C
Time within 5°C of actual peak (t_p)	20 - 40 seconds
Ramp-down Rate	6°C/second Maximum
Time 25°C to Peak Temperature (t)	8 minutes Maximum
Moisture Sensitivity Level	Level 1

Recommended Solder Reflow Methods

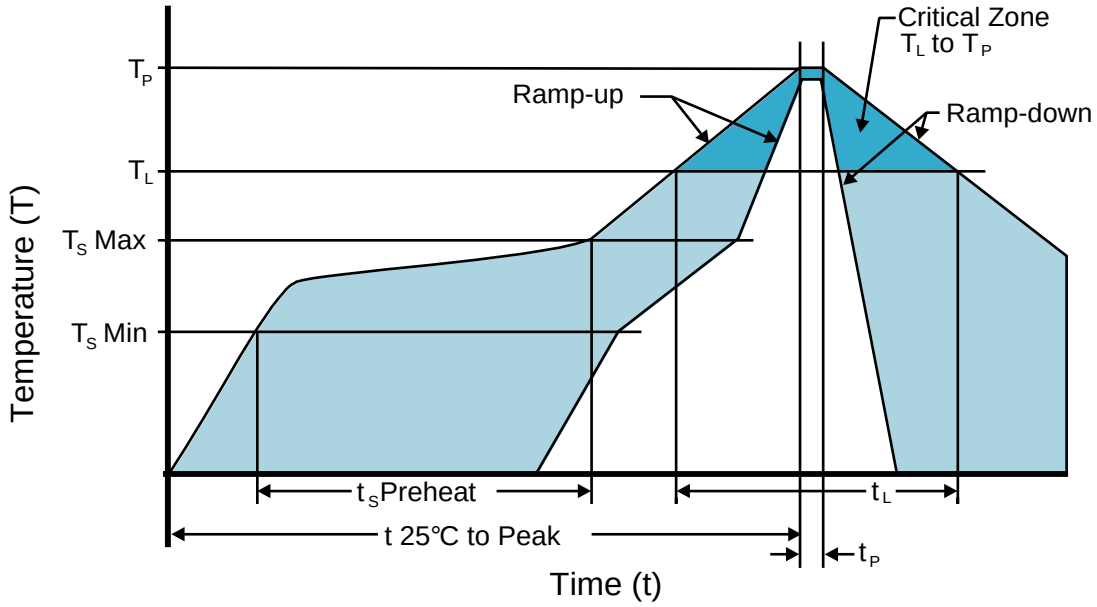

Low Temperature Infrared/Convection 240°C

T_S MAX to T_L (Ramp-up Rate)	5°C/second Maximum
Preheat **- Temperature Minimum (T_S MIN)** **- Temperature Typical (T_S TYP)** **- Temperature Maximum (T_S MAX)** **- Time (t_S MIN)**	 N/A 150°C N/A 60 - 120 Seconds
Ramp-up Rate (T_L to T_P)	5°C/second Maximum
Time Maintained Above: **- Temperature (T_L)** **- Time (t_L)**	 150°C 200 Seconds Maximum
Peak Temperature (T_P)	240°C Maximum
Target Peak Temperature (T_P Target)	240°C Maximum 1 Time / 230°C Maximum 2 Times
Time within 5°C of actual peak (t_p)	10 seconds Maximum 2 Times / 80 seconds Maximum 1 Time
Ramp-down Rate	5°C/second Maximum
Time 25°C to Peak Temperature (t)	N/A
Moisture Sensitivity Level	Level 1

Low Temperature Manual Soldering

185°C Maximum for 10 seconds Maximum, 2 times Maximum.

High Temperature Manual Soldering

260°C Maximum for 5 seconds Maximum, 2 times Maximum.