EH4720TS-4.096M TR

EH47 20 TS -4.096M TR

- **Series** — RoHS Compliant (Pb-free) 2.5V 4 Pad 2.5mm x 3.2mm Ceramic SMD LVCMOS Oscillator
- **Frequency Tolerance/Stability** — ±20ppm Maximum
- **Operating Temperature Range** — 0°C to +70°C
- **Duty Cycle** — 50 ±10(%)
- **Pin 1 Connection** — Tri-State (High Impedance)
- **Nominal Frequency** — 4.096MHz
- **Packaging Options** — Tape & Reel

ELECTRICAL SPECIFICATIONS

Nominal Frequency	4.096MHz
Frequency Tolerance/Stability	±20ppm Maximum (Inclusive of all conditions: Calibration Tolerance at 25°C, Frequency Stability over the Operating Temperature Range, Supply Voltage Change, Output Load Change, First Year Aging at 25°, 260°C Reflow, Shock, and Vibration)
Aging at 25°C	±5ppm/Year Maximum
Operating Temperature Range	0°C to +70°C
Supply Voltage	2.5Vdc ±5%
Input Current	6mA Maximum (No Load)
Output Voltage Logic High (Voh)	90% of Vdd Minimum (IOH = -8mA)
Output Voltage Logic Low (Vol)	10% of Vdd Maximum (IOL = +8mA)
Rise/Fall Time	6nSec Maximum (Measured at 20% to 80% of waveform)
Duty Cycle	50 ±10(%) (Measured at 50% of waveform)
Load Drive Capability	15pF Maximum
Output Logic Type	CMOS
Pin 1 Connection	Tri-State (High Impedance)
Tri-State Input Voltage (Vih and Vil)	90% of Vdd Minimum or No Connect to Enable Output, 10% of Vdd Maximum to Disable Output (High Impedance)
Standby Current	10µA Maximum (Pin 1 = Ground)
Absolute Clock Jitter	±100pSec Maximum
Start Up Time	10mSec Maximum
Storage Temperature Range	-55°C to +125°C

ENVIRONMENTAL & MECHANICAL SPECIFICATIONS

ESD Susceptibility	MIL-STD-883, Method 3015, Class 1, HBM: 1500Vdc
Fine Leak Test	MIL-STD-883, Method 1014, Condition A
Flammability	UL94-V0
Gross Leak Test	MIL-STD-883, Method 1014, Condition C
Mechanical Shock	MIL-STD-883, Method 2002, Condition B
Moisture Resistance	MIL-STD-883, Method 1004
Moisture Sensitivity	J-STD-020, MSL 1
Resistance to Soldering Heat	MIL-STD-202, Method 210, Condition K
Resistance to Solvents	MIL-STD-202, Method 215
Solderability	MIL-STD-883, Method 2003
Temperature Cycling	MIL-STD-883, Method 1010, Condition B
Vibration	MIL-STD-883, Method 2007, Condition A

EH4720TS-4.096M TR

MECHANICAL DIMENSIONS (all dimensions in millimeters)

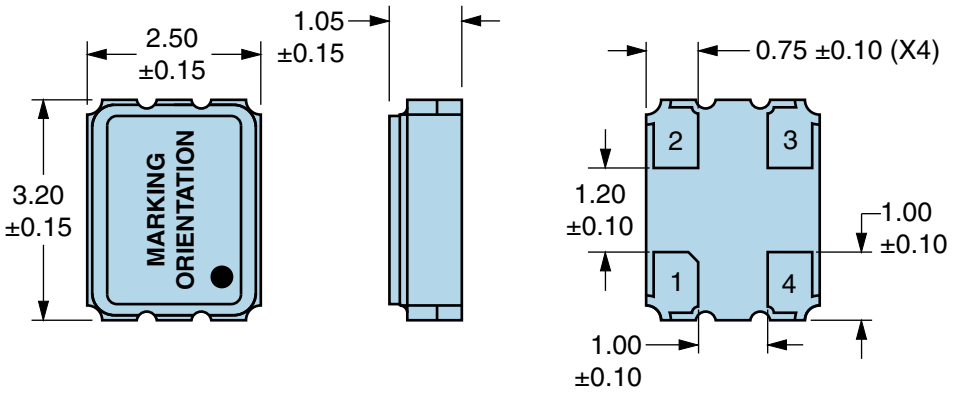

PIN	CONNECTION
1	Tri-State
2	Case Ground
3	Output
4	Supply Voltage

LINE	MARKING
1	**EPO**
2	**XXXXX** *XXXXX=Ecliptek Manufacturing Identifier*

Suggested Solder Pad Layout

All Dimensions in Millimeters

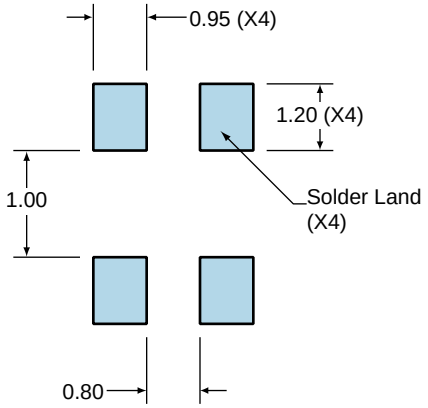

All Tolerances are ±0.1

OUTPUT WAVEFORM & TIMING DIAGRAM

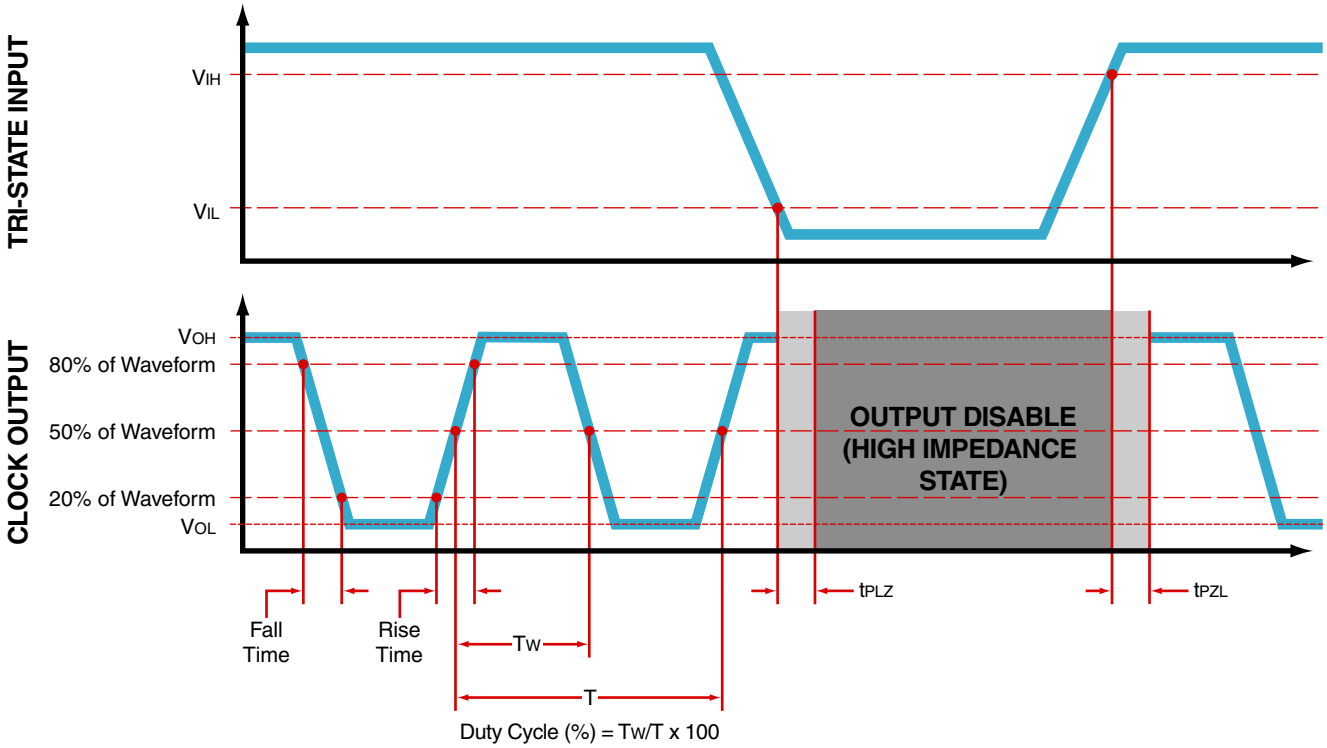

Test Circuit for CMOS Output

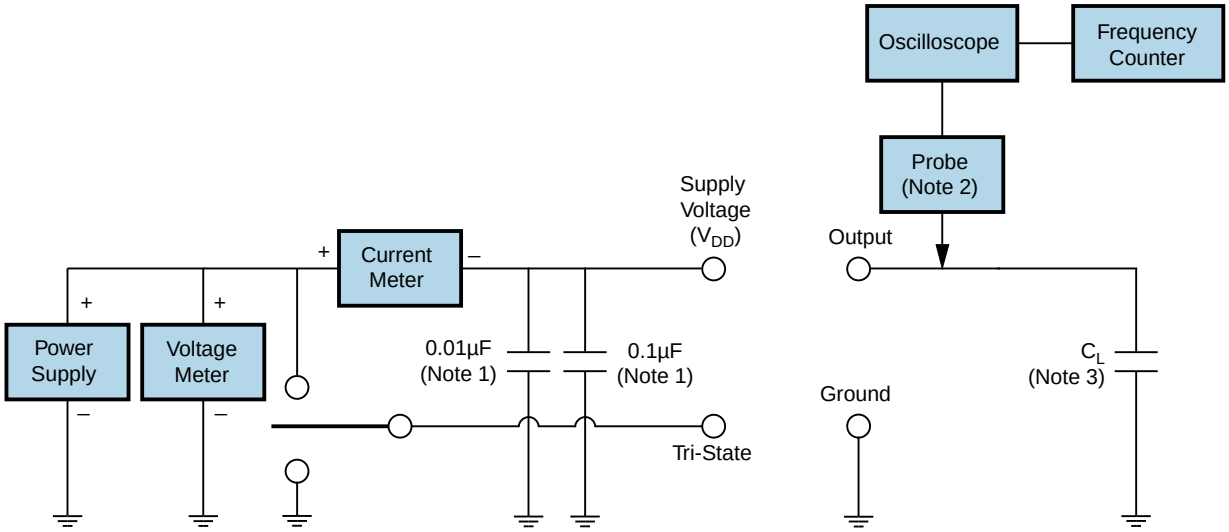

Note 1: An external 0.1µF low frequency tantalum bypass capacitor in parallel with a 0.01µF high frequency ceramic bypass capacitor close to the package ground and V_{DD} pin is required.
Note 2: A low capacitance (<12pF), 10X attenuation factor, high impedance (>10Mohms), and high bandwidth (>300MHz) passive probe is recommended.
Note 3: Capacitance value C_L includes sum of all probe and fixture capacitance.

EH4720TS-4.096M TR

Tape & Reel Dimensions

Quantity Per Reel: 1,000 units

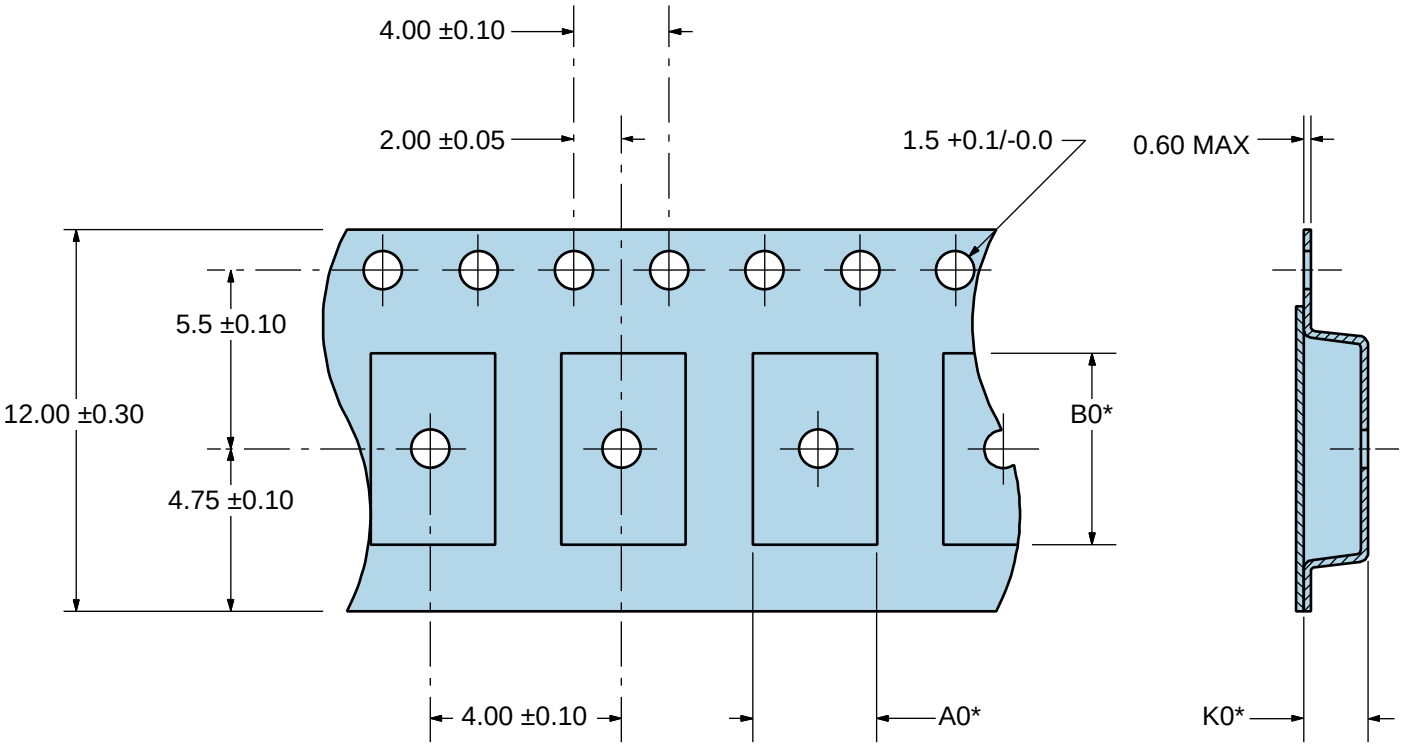

*Compliant to EIA 481A

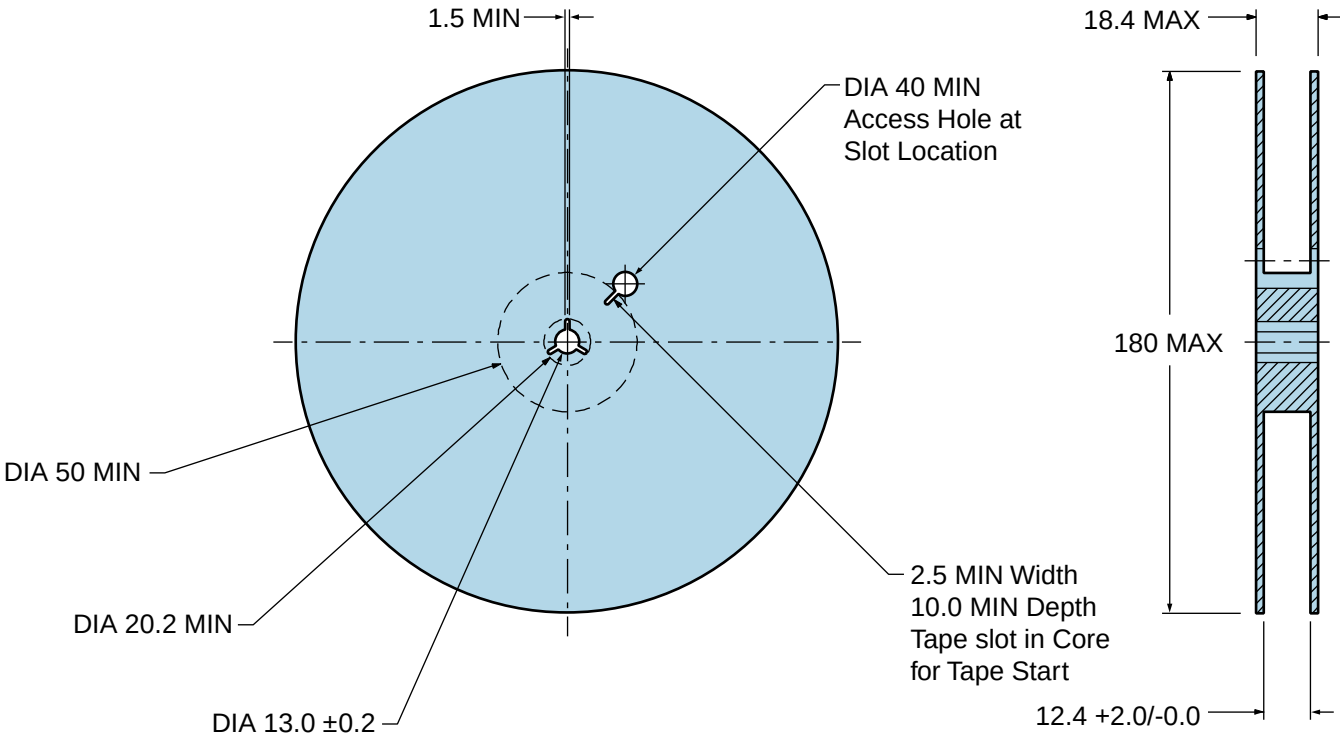

Recommended Solder Reflow Methods

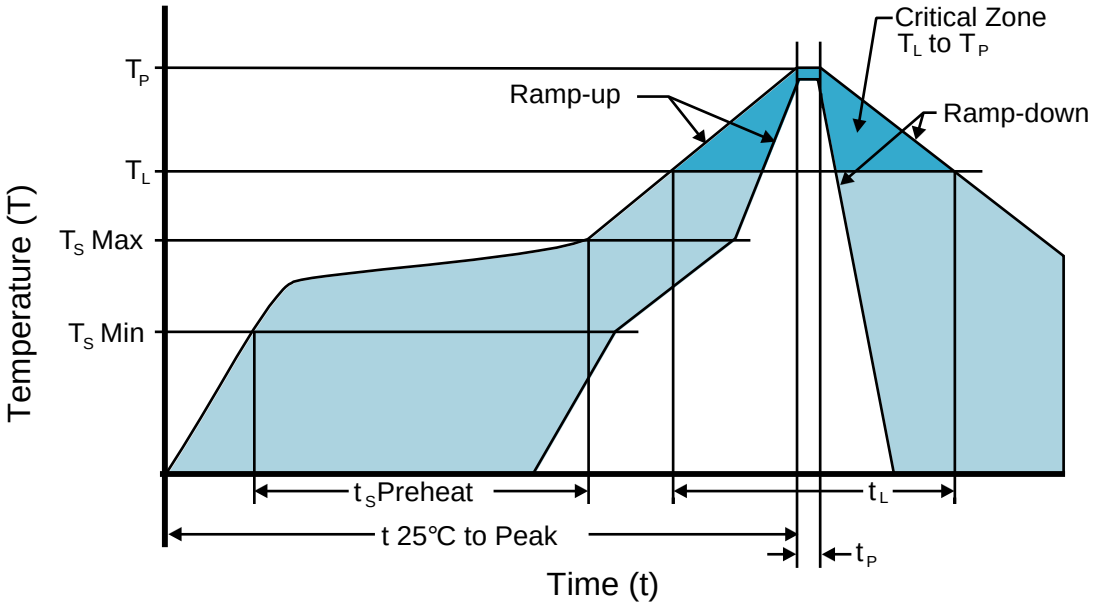

High Temperature Infrared/Convection

T_S MAX to T_L (Ramp-up Rate)	3°C/second Maximum
Preheat	
- Temperature Minimum (T_S MIN)	150°C
- Temperature Typical (T_S TYP)	175°C
- Temperature Maximum (T_S MAX)	200°C
- Time (t_S MIN)	60 - 180 Seconds
Ramp-up Rate (T_L to T_P)	3°C/second Maximum
Time Maintained Above:	
- Temperature (T_L)	217°C
- Time (t_L)	60 - 150 Seconds
Peak Temperature (T_P)	260°C Maximum for 10 Seconds Maximum
Target Peak Temperature (T_P Target)	250°C +0/-5°C
Time within 5°C of actual peak (t_p)	20 - 40 seconds
Ramp-down Rate	6°C/second Maximum
Time 25°C to Peak Temperature (t)	8 minutes Maximum
Moisture Sensitivity Level	Level 1

EH4720TS-4.096M TR

Recommended Solder Reflow Methods

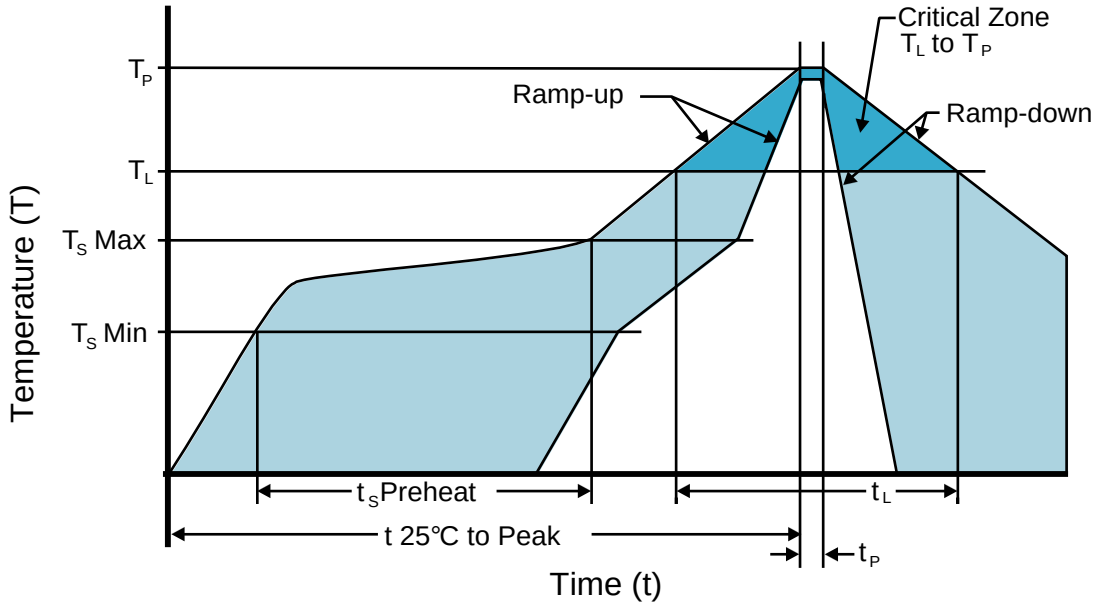

Low Temperature Infrared/Convection 240°C

T_S MAX to T_L (Ramp-up Rate)	5°C/second Maximum
Preheat	
- Temperature Minimum (T_S MIN)	N/A
- Temperature Typical (T_S TYP)	150°C
- Temperature Maximum (T_S MAX)	N/A
- Time (t_S MIN)	60 - 120 Seconds
Ramp-up Rate (T_L to T_P)	5°C/second Maximum
Time Maintained Above:	
- Temperature (T_L)	150°C
- Time (t_L)	200 Seconds Maximum
Peak Temperature (T_P)	240°C Maximum
Target Peak Temperature (T_P Target)	240°C Maximum 1 Time / 230°C Maximum 2 Times
Time within 5°C of actual peak (t_p)	10 seconds Maximum 2 Times / 80 seconds Maximum 1 Time
Ramp-down Rate	5°C/second Maximum
Time 25°C to Peak Temperature (t)	N/A
Moisture Sensitivity Level	Level 1

Low Temperature Manual Soldering

185°C Maximum for 10 seconds Maximum, 2 times Maximum.

High Temperature Manual Soldering

260°C Maximum for 5 seconds Maximum, 2 times Maximum.