# EL13C5C2F-100.000M

**EL13C5 C 2 F -100.000M**

**Series**
RoHS Compliant (Pb-free) 3.3V 6 Pad 3.2mm x 5mm
Ceramic SMD LVDS Oscillator

**Frequency Tolerance/Stability**
±100ppm Maximum over 0°C to +70°C

**Duty Cycle**
50 ±5(%)

**Logic Control / Additional Output**
Tri-State and Complementary Output

**Nominal Frequency**
100.000MHz

## ELECTRICAL SPECIFICATIONS

| | |
|---|---|
| **Nominal Frequency** | 100.000MHz |
| **Frequency Tolerance/Stability** | ±100ppm Maximum over 0°C to +70°C (Inclusive of all conditions: Calibration Tolerance (at 25°C), Frequency Stability over the Operating Temperature Range, Supply Voltage Change, Output Load Change, First Year Aging at 25°C, Shock, and Vibration) |
| **Supply Voltage** | +3.3Vdc ±5% |
| **Input Current** | 66mA Maximum |
| **Output Voltage Logic High (Voh)** | 1.43Vdc Typical, 1.6Vdc Maximum |
| **Output Voltage Logic Low (Vol)** | 1.1Vdc Typical, 0.9Vdc Minimum |
| **Differential Output Voltage (Vod)** | 247mV Minimum, 330mV Typical, 454mV Maximum |
| **Offset Voltage (Vos)** | 1.125V Minimum, 1.250V Typical, 1.375V Maximum |
| **Rise/Fall Time** | 300pSec Typical, 700pSec Maximum (Measured over 20% to 80% of waveform) |
| **Differential Output Error (dVod)** | 50mV Maximum |
| **Duty Cycle** | 50 ±5(%) (Measured at 50% of waveform or at the crossing point) |
| **Offset Error (dVos)** | 150mV Maximum |
| **Output Swing (dVOpp)** | 350mVdc Minimum |
| **Load Drive Capability** | 100 Ohms Between Output and Complementary Output |
| **Output Logic Type** | LVDS |
| **Phase Noise** | -60dBc/Hz at 10Hz Offset, -95dBc/Hz at 100Hz Offset, -125dBc/Hz at 1kHz Offset, -143dBc/Hz at 10kHz Offset, -145dBc/Hz at 100kHz Offset, -145dBc/Hz at 1MHz Offset, -146dBc/Hz at 10MHz Offset (All Values are Typical, Fo=156.250MHz) |
| **Logic Control / Additional Output** | Tri-State and Complementary Output |
| **Tri-State Input Voltage (Vih and Vil)** | Vih of 70% of Vcc Minimum or No Connect to Enable Output and Complementary Output, Vil of 30% of Vcc Maximum to Disable High Impedance Output and Complementary Output |
| **Standby Current** | 30µA Maximum (Without Load) |
| **RMS Phase Jitter** | 0.4pSec Typical, 1pSec Maximum (Fj=12kHz to 20MHz) |
| **Start Up Time** | 10mSec Maximum |
| **Storage Temperature Range** | -55°C to +125°C |

## ENVIRONMENTAL & MECHANICAL SPECIFICATIONS

| | |
|---|---|
| **ESD Susceptibility** | MIL-STD-883, Method 3015, Class 1, HBM: 1500V |
| **Fine Leak Test** | MIL-STD-883, Method 1014, Condition A |
| **Flammability** | UL94-V0 |
| **Gross Leak Test** | MIL-STD-883, Method 1014, Condition C |
| **Mechanical Shock** | MIL-STD-883, Method 2002, Condition B |
| **Moisture Resistance** | MIL-STD-883, Method 1004 |
| **Moisture Sensitivity** | J-STD-020, MSL 1 |
| **Resistance to Soldering Heat** | MIL-STD-202, Method 210, Condition K |
| **Resistance to Solvents** | MIL-STD-202, Method 215 |
| **Solderability** | MIL-STD-883, Method 2003 |
| **Temperature Cycling** | MIL-STD-883, Method 1010, Condition B |
| **Vibration** | MIL-STD-883, Method 2007, Condition A |

# EL13C5C2F-100.000M

## MECHANICAL DIMENSIONS (all dimensions in millimeters)

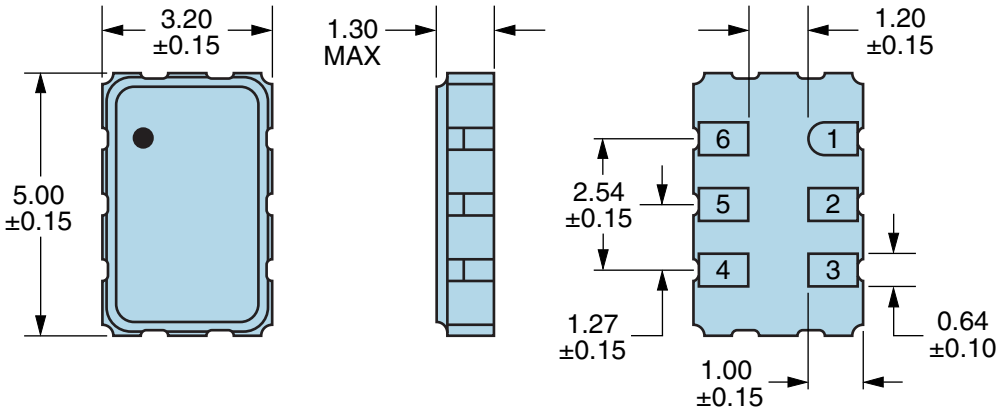


| PIN | CONNECTION |
|---|---|
| 1 | Tri-State |
| 2 | No Connect |
| 3 | Case/Ground |
| 4 | Output |
| 5 | Complementary Output |
| 6 | Supply Voltage |

| LINE | MARKING |
|---|---|
| 1 | **E100.00**<br>*E=Ecliptek Designator* |
| 2 | **XXYZZ**<br>*XX=Ecliptek Manufacturing Code*<br>*Y=Last Digit of the Year*<br>*ZZ=Week of the Year* |

### Suggested Solder Pad Layout

All Dimensions in Millimeters

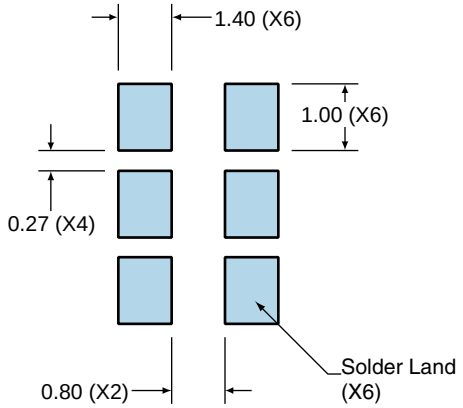


All Tolerances are ±0.1

## OUTPUT WAVEFORM & TIMING DIAGRAM

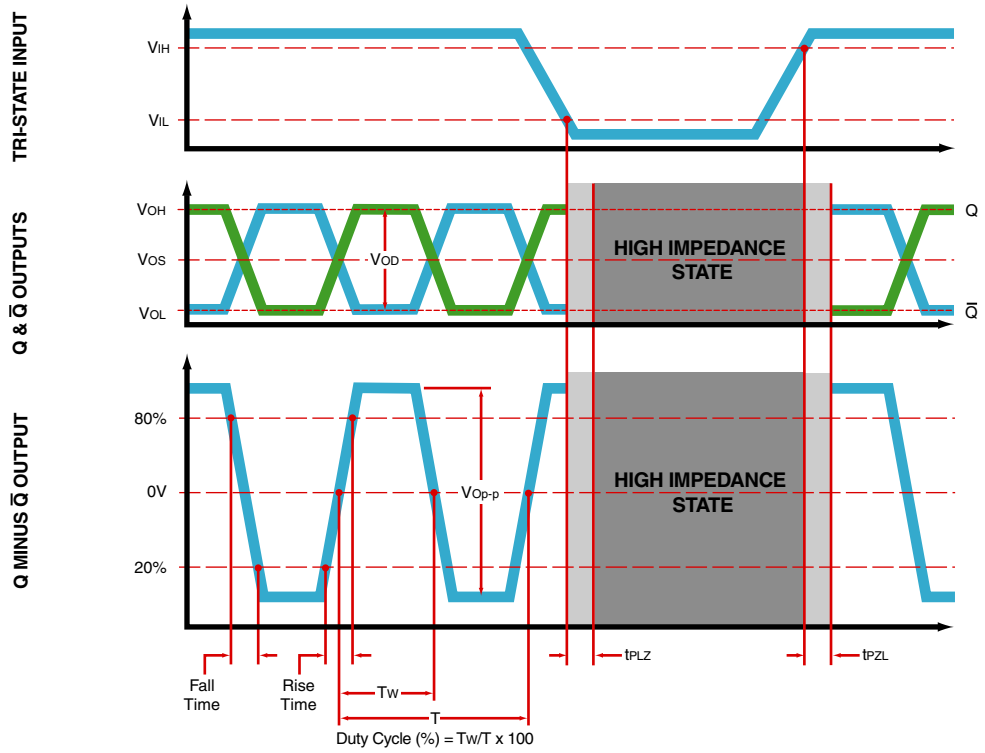


## Test Circuit for Tri-State and Complementary Output

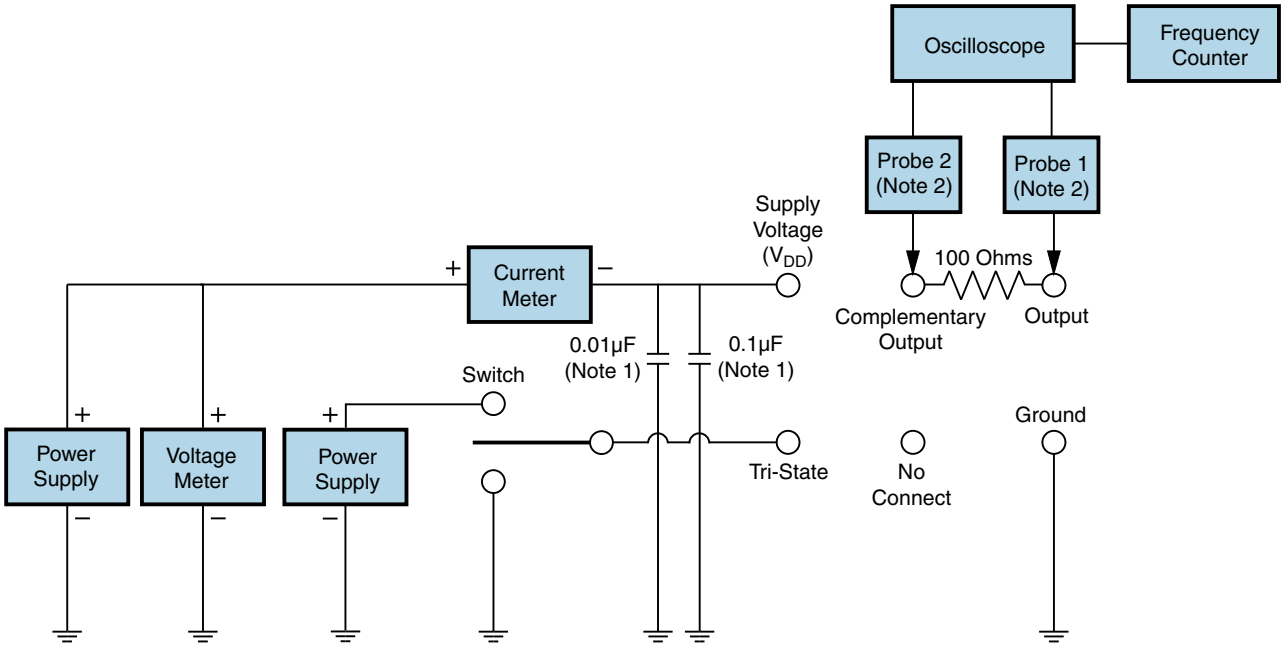


Note 1: An external 0.01µF ceramic bypass capacitor in parallel with a 0.1µF high frequency ceramic bypass capacitor close (less than 2mm) to the package ground and supply voltage pin is required.

Note 2: A low capacitance (<12pF), 10X attenuation factor, high impedance (>10Mohms), and high bandwidth (>500MHz) passive probe is recommended.

Note 3: Test circuit PCB traces need to be designed for a characteristic line impedance of 50 ohms.

# Recommended Solder Reflow Methods

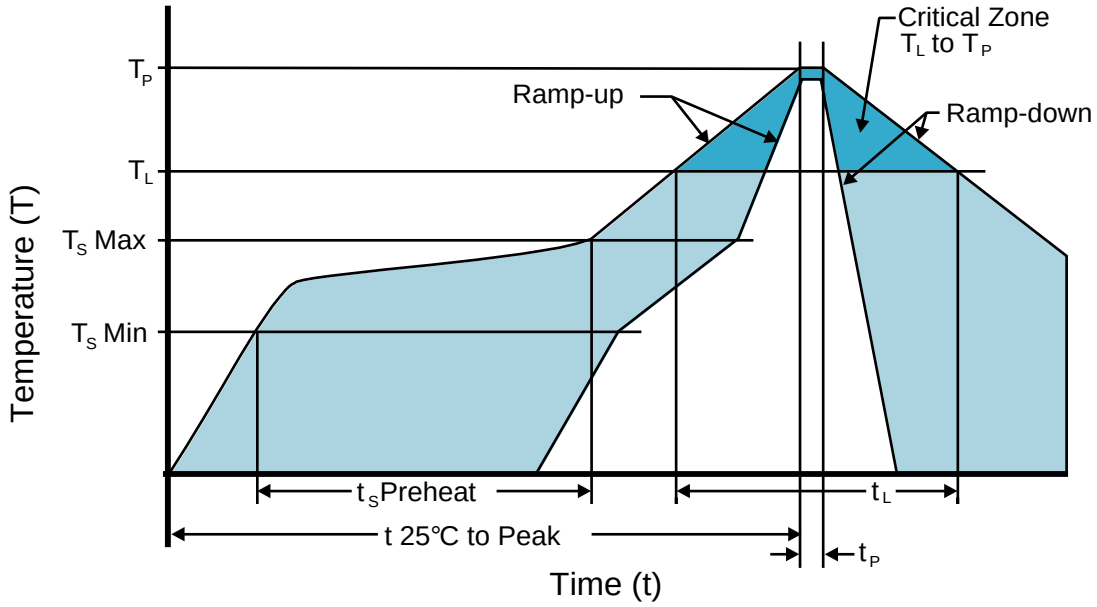


## High Temperature Infrared/Convection

| | |
|---|---|
| **$T_S$ MAX to $T_L$ (Ramp-up Rate)** | 3°C/second Maximum |
| **Preheat** | |
| **- Temperature Minimum ($T_S$ MIN)** | 150°C |
| **- Temperature Typical ($T_S$ TYP)** | 175°C |
| **- Temperature Maximum ($T_S$ MAX)** | 200°C |
| **- Time ($t_S$ MIN)** | 60 - 180 Seconds |
| **Ramp-up Rate ($T_L$ to $T_P$)** | 3°C/second Maximum |
| **Time Maintained Above:** | |
| **- Temperature ($T_L$)** | 217°C |
| **- Time ($t_L$)** | 60 - 150 Seconds |
| **Peak Temperature ($T_P$)** | 260°C Maximum for 10 Seconds Maximum |
| **Target Peak Temperature ($T_P$ Target)** | 250°C +0/-5°C |
| **Time within 5°C of actual peak ($t_p$)** | 20 - 40 seconds |
| **Ramp-down Rate** | 6°C/second Maximum |
| **Time 25°C to Peak Temperature (t)** | 8 minutes Maximum |
| **Moisture Sensitivity Level** | Level 1 |

# Recommended Solder Reflow Methods

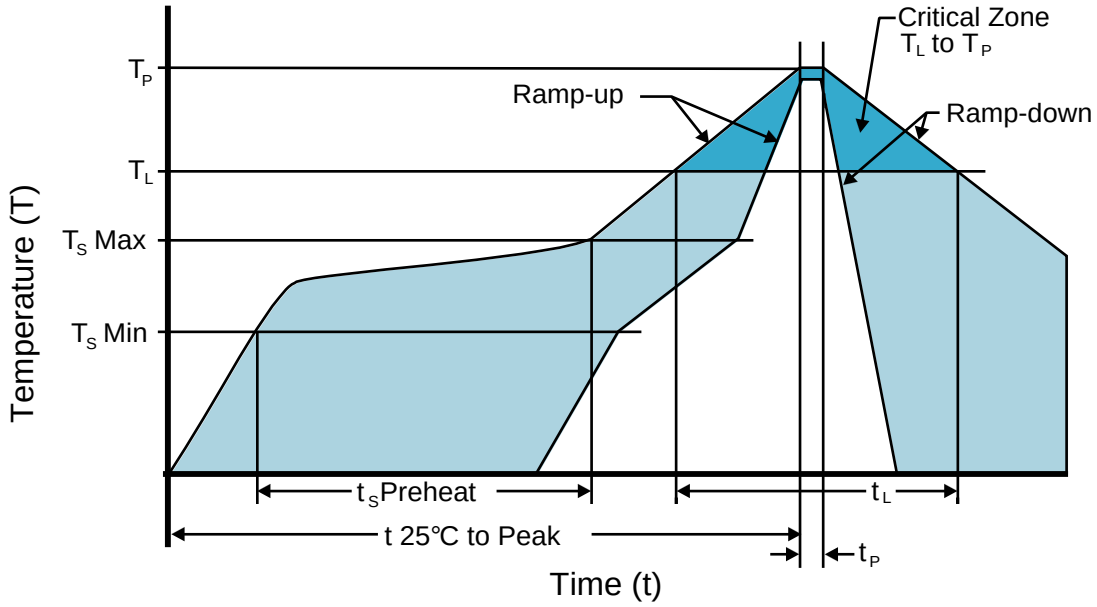


## Low Temperature Infrared/Convection 240°C

| | |
|---|---|
| **$T_S$ MAX to $T_L$ (Ramp-up Rate)** | 5°C/second Maximum |
| **Preheat** | |
| **- Temperature Minimum ($T_S$ MIN)** | N/A |
| **- Temperature Typical ($T_S$ TYP)** | 150°C |
| **- Temperature Maximum ($T_S$ MAX)** | N/A |
| **- Time ($t_S$ MIN)** | 60 - 120 Seconds |
| **Ramp-up Rate ($T_L$ to $T_P$)** | 5°C/second Maximum |
| **Time Maintained Above:** | |
| **- Temperature ($T_L$)** | 150°C |
| **- Time ($t_L$)** | 200 Seconds Maximum |
| **Peak Temperature ($T_P$)** | 240°C Maximum |
| **Target Peak Temperature ($T_P$ Target)** | 240°C Maximum 1 Time / 230°C Maximum 2 Times |
| **Time within 5°C of actual peak ($t_p$)** | 10 seconds Maximum 2 Times / 80 seconds Maximum 1 Time |
| **Ramp-down Rate** | 5°C/second Maximum |
| **Time 25°C to Peak Temperature (t)** | N/A |
| **Moisture Sensitivity Level** | Level 1 |

## Low Temperature Manual Soldering

185°C Maximum for 10 seconds Maximum, 2 times Maximum.

## High Temperature Manual Soldering

260°C Maximum for 5 seconds Maximum, 2 times Maximum.