EL13C5E2F-100.000M

EL13C5 E 2 F -100.000M

Series
RoHS Compliant (Pb-free) 3.3V 6 Pad 3.2mm x 5mm
Ceramic SMD LVDS Oscillator

Frequency Tolerance/Stability
±25ppm Maximum over 0°C to +70°C

Duty Cycle
50 ±5(%)

Logic Control / Additional Output
Tri-State and Complementary Output

Nominal Frequency
100.000MHz

ELECTRICAL SPECIFICATIONS

Nominal Frequency	100.000MHz
Frequency Tolerance/Stability	±25ppm Maximum over 0°C to +70°C (Inclusive of all conditions: Calibration Tolerance (at 25°C), Frequency Stability over the Operating Temperature Range, Supply Voltage Change, Output Load Change, First Year Aging at 25°C, Shock, and Vibration)
Supply Voltage	+3.3Vdc ±5%
Input Current	66mA Maximum
Output Voltage Logic High (Voh)	1.43Vdc Typical, 1.6Vdc Maximum
Output Voltage Logic Low (Vol)	1.1Vdc Typical, 0.9Vdc Minimum
Differential Output Voltage (Vod)	247mV Minimum, 330mV Typical, 454mV Maximum
Offset Voltage (Vos)	1.125V Minimum, 1.250V Typical, 1.375V Maximum
Rise/Fall Time	300pSec Typical, 700pSec Maximum (Measured over 20% to 80% of waveform)
Differential Output Error (dVod)	50mV Maximum
Duty Cycle	50 ±5(%) (Measured at 50% of waveform or at the crossing point)
Offset Error (dVos)	150mV Maximum
Output Swing (dVOpp)	350mVdc Minimum
Load Drive Capability	100 Ohms Between Output and Complementary Output
Output Logic Type	LVDS
Phase Noise	-60dBc/Hz at 10Hz Offset, -95dBc/Hz at 100Hz Offset, -125dBc/Hz at 1kHz Offset, -143dBc/Hz at 10kHz Offset, -145dBc/Hz at 100kHz Offset, -145dBc/Hz at 1MHz Offset, -146dBc/Hz at 10MHz Offset (All Values are Typical, Fo=156.250MHz)
Logic Control / Additional Output	Tri-State and Complementary Output
Tri-State Input Voltage (Vih and Vil)	Vih of 70% of Vcc Minimum or No Connect to Enable Output and Complementary Output, Vil of 30% of Vcc Maximum to Disable High Impedance Output and Complementary Output
Standby Current	30µA Maximum (Without Load)
RMS Phase Jitter	0.4pSec Typical, 1pSec Maximum (Fj=12kHz to 20MHz)
Start Up Time	10mSec Maximum
Storage Temperature Range	-55°C to +125°C

ENVIRONMENTAL & MECHANICAL SPECIFICATIONS

ESD Susceptibility	MIL-STD-883, Method 3015, Class 1, HBM: 1500V
Fine Leak Test	MIL-STD-883, Method 1014, Condition A
Flammability	UL94-V0
Gross Leak Test	MIL-STD-883, Method 1014, Condition C
Mechanical Shock	MIL-STD-883, Method 2002, Condition B
Moisture Resistance	MIL-STD-883, Method 1004
Moisture Sensitivity	J-STD-020, MSL 1
Resistance to Soldering Heat	MIL-STD-202, Method 210, Condition K
Resistance to Solvents	MIL-STD-202, Method 215
Solderability	MIL-STD-883, Method 2003
Temperature Cycling	MIL-STD-883, Method 1010, Condition B
Vibration	MIL-STD-883, Method 2007, Condition A

EL13C5E2F-100.000M

MECHANICAL DIMENSIONS (all dimensions in millimeters)

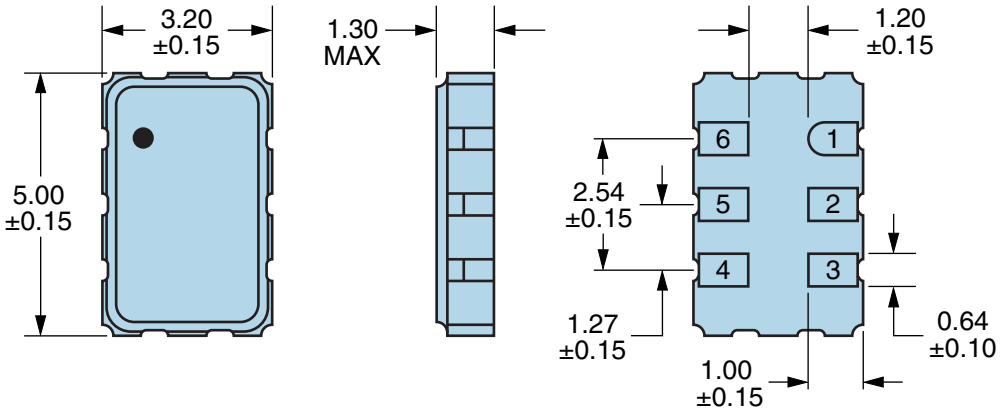

PIN	CONNECTION
1	Tri-State
2	No Connect
3	Case/Ground
4	Output
5	Complementary Output
6	Supply Voltage

LINE	MARKING
1	**E100.00** *E=Ecliptek Designator*
2	**XXYZZ** *XX=Ecliptek Manufacturing Code* *Y=Last Digit of the Year* *ZZ=Week of the Year*

Suggested Solder Pad Layout

All Dimensions in Millimeters

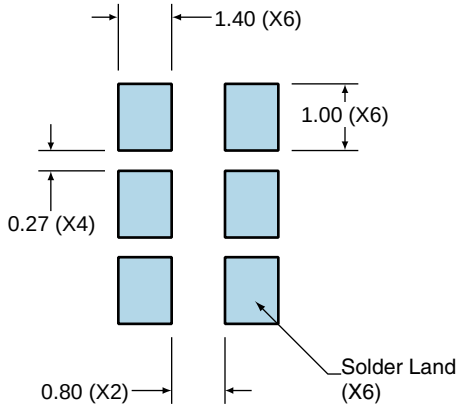

All Tolerances are ±0.1

OUTPUT WAVEFORM & TIMING DIAGRAM

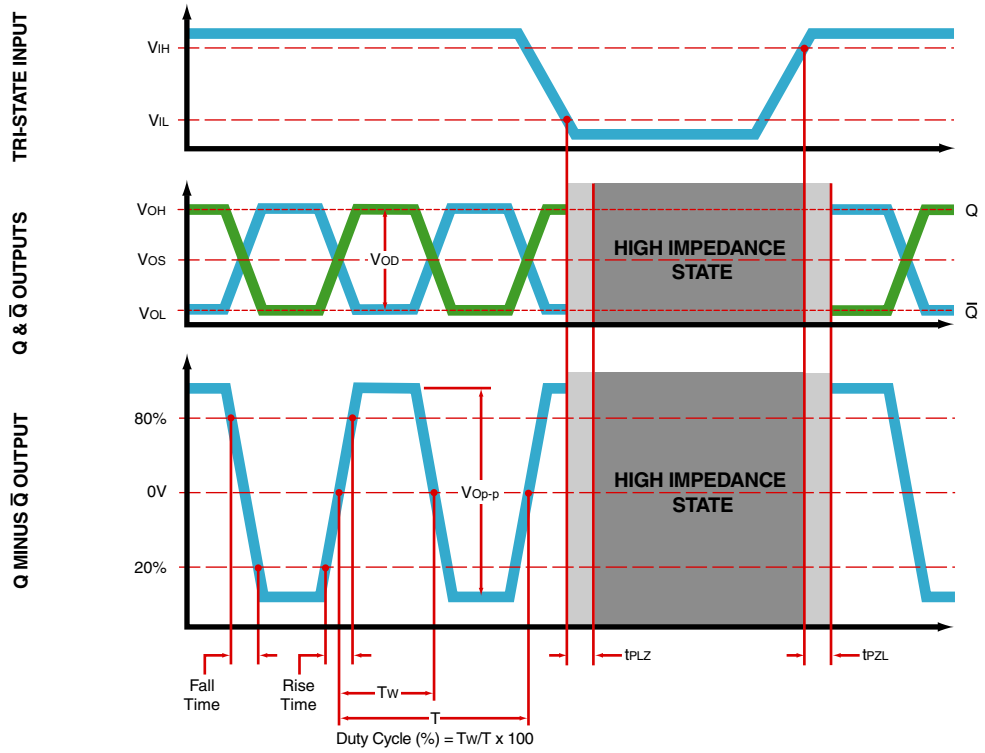

Test Circuit for Tri-State and Complementary Output

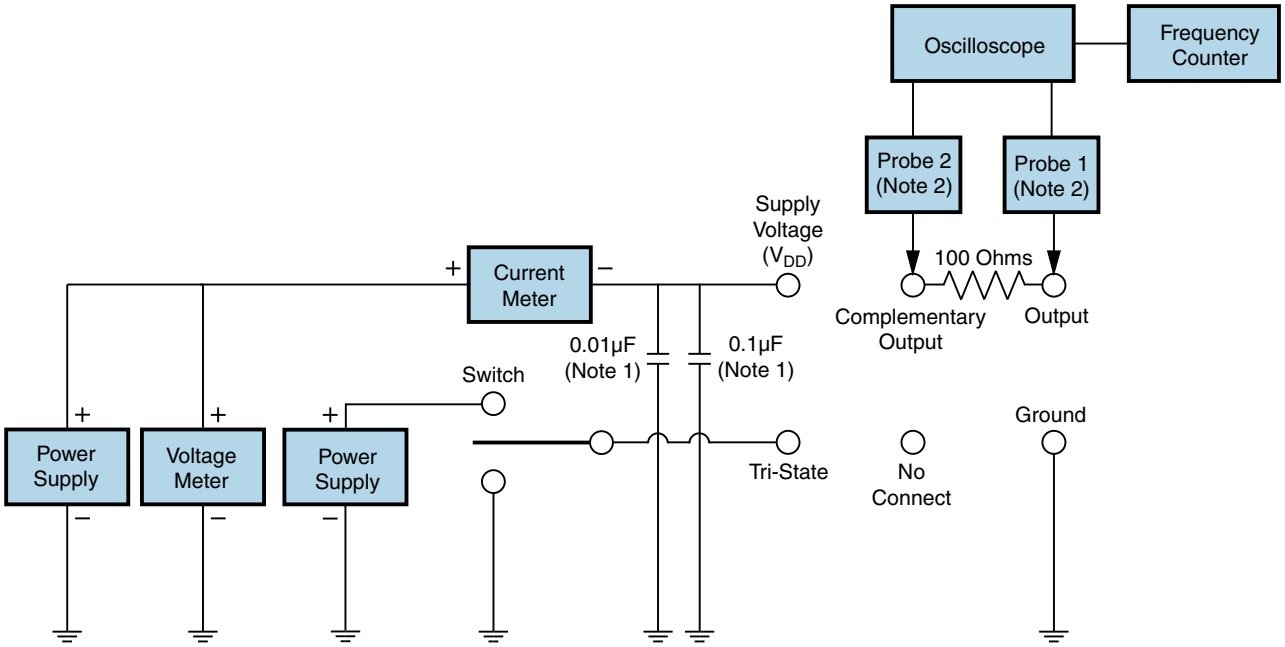

Note 1: An external 0.01µF ceramic bypass capacitor in parallel with a 0.1µF high frequency ceramic bypass capacitor close (less than 2mm) to the package ground and supply voltage pin is required.

Note 2: A low capacitance (<12pF), 10X attenuation factor, high impedance (>10Mohms), and high bandwidth (>500MHz) passive probe is recommended.

Note 3: Test circuit PCB traces need to be designed for a characteristic line impedance of 50 ohms.

Recommended Solder Reflow Methods

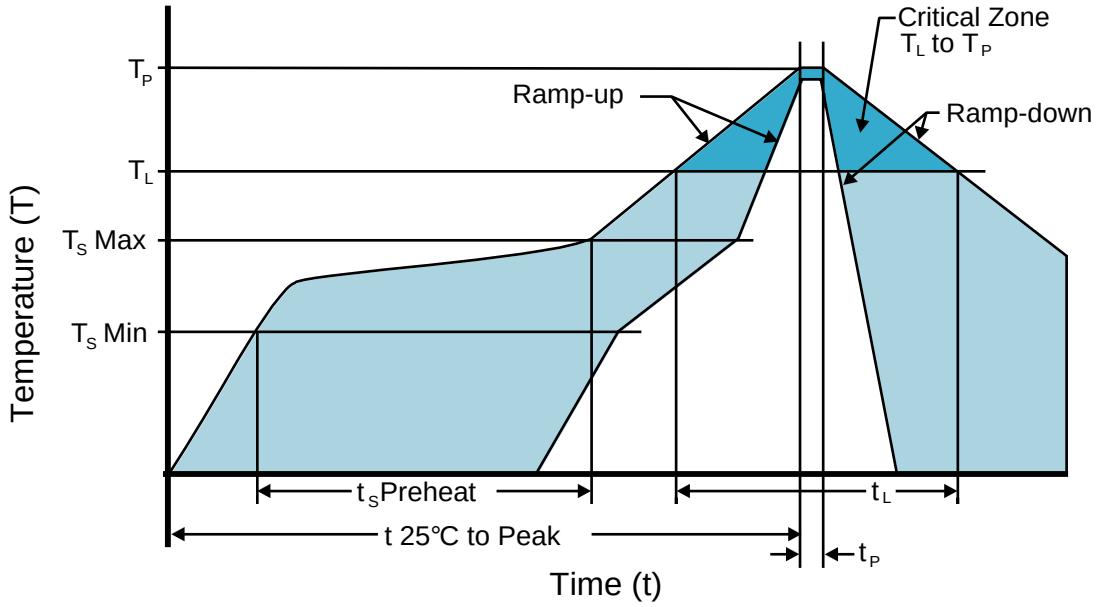

High Temperature Infrared/Convection

T_S MAX to T_L (Ramp-up Rate)	3°C/second Maximum
Preheat	
- Temperature Minimum (T_S MIN)	150°C
- Temperature Typical (T_S TYP)	175°C
- Temperature Maximum (T_S MAX)	200°C
- Time (t_S MIN)	60 - 180 Seconds
Ramp-up Rate (T_L to T_P)	3°C/second Maximum
Time Maintained Above:	
- Temperature (T_L)	217°C
- Time (t_L)	60 - 150 Seconds
Peak Temperature (T_P)	260°C Maximum for 10 Seconds Maximum
Target Peak Temperature (T_P Target)	250°C +0/-5°C
Time within 5°C of actual peak (t_p)	20 - 40 seconds
Ramp-down Rate	6°C/second Maximum
Time 25°C to Peak Temperature (t)	8 minutes Maximum
Moisture Sensitivity Level	Level 1

Recommended Solder Reflow Methods

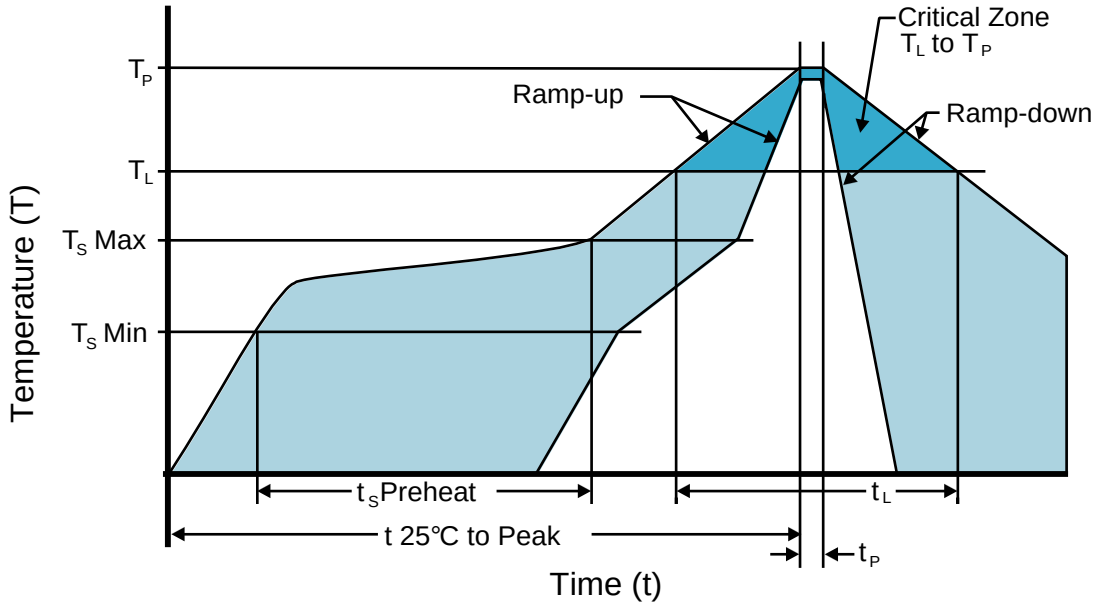

Low Temperature Infrared/Convection 240°C

T_S MAX to T_L (Ramp-up Rate)	5°C/second Maximum
Preheat	
- Temperature Minimum (T_S MIN)	N/A
- Temperature Typical (T_S TYP)	150°C
- Temperature Maximum (T_S MAX)	N/A
- Time (t_S MIN)	60 - 120 Seconds
Ramp-up Rate (T_L to T_P)	5°C/second Maximum
Time Maintained Above:	
- Temperature (T_L)	150°C
- Time (t_L)	200 Seconds Maximum
Peak Temperature (T_P)	240°C Maximum
Target Peak Temperature (T_P Target)	240°C Maximum 1 Time / 230°C Maximum 2 Times
Time within 5°C of actual peak (t_p)	10 seconds Maximum 2 Times / 80 seconds Maximum 1 Time
Ramp-down Rate	5°C/second Maximum
Time 25°C to Peak Temperature (t)	N/A
Moisture Sensitivity Level	Level 1

Low Temperature Manual Soldering

185°C Maximum for 10 seconds Maximum, 2 times Maximum.

High Temperature Manual Soldering

260°C Maximum for 5 seconds Maximum, 2 times Maximum.