SHEET OF

NOTES:
1. ALL DIMENSION IN MM [INCH]
2. GENERAL TOLERANCE: X.X=±0.4
   X.XX=±0.25
3. TERM. NOS. FOR REF. ONLY
4. CONTACT RATING SWITCHING: 150mA, 250V AC/DC
   350mA, 110V AC/DC
5. CONTACT RATING (NON-SWITCHING) 5A
6. CONTACT MATERIAL: SILVER OVER COPPER ALLOY
7. OPERATING FORCE: 425±100 CM/STANDARD
8. OPERATING TEMP: -30° to 85°C
9. ▲ CIRCUIT DP: 4 POSITIONS, 30° INDEX.
10. DIELECTRIC STRENGTH 1000V RMS min.@ SEA LEVEL
11. ▲ DESIGNATE MAJOR DIMENSIONS
12. HARDWARE SUPPLIED ON SWITCH- SEE BELOW
▲ STOPRING, LOCKWASHER, & HEXNUT

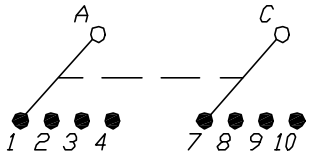

CONTACT CONFIGURATION
Timing: Shorting

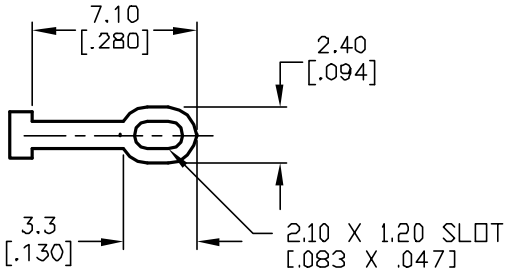

TERMINATION DETAIL
SCALE 2X

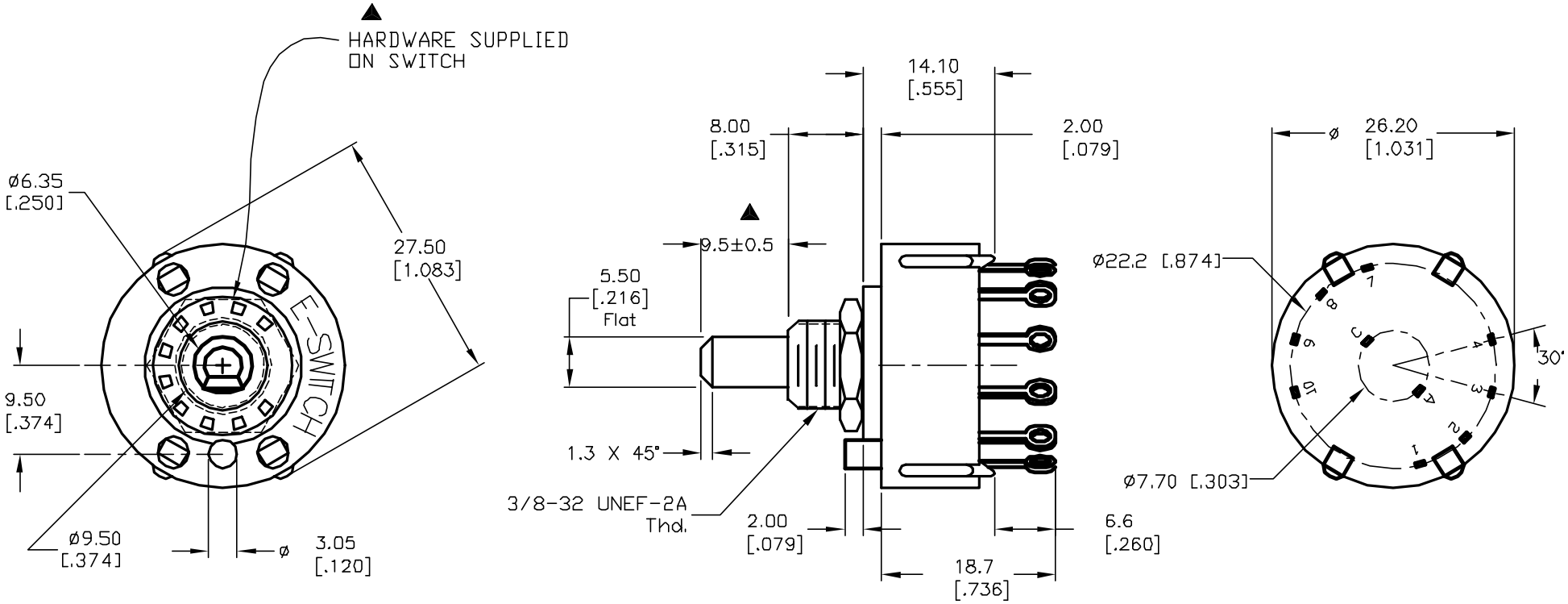

REV.	ECN No.	DESCRIPTION	DATE	CHKD
C	12821	REVISED NOTE 12	3/5/03	CJB
B	12579	REV DESC PER NEW CATALOG	11/19/02	CJB
A	11499	RELEASED FOR PRODUCTION	5/15/01	CJB

THE INFORMATION CONTAINED IN THIS DOCUMENT IS PROPRIETARY TO E-SWITCH AND IS NOT TO BE COPIED OR TRANSFERRED

E-SWITCH®

TITLE: KC-24A (9.5mm) 01-S-L-S

SCALE	DATE	DR	DWG	REV
1.5:1	5/15/01	CJB	G510897	C