SHEET OF

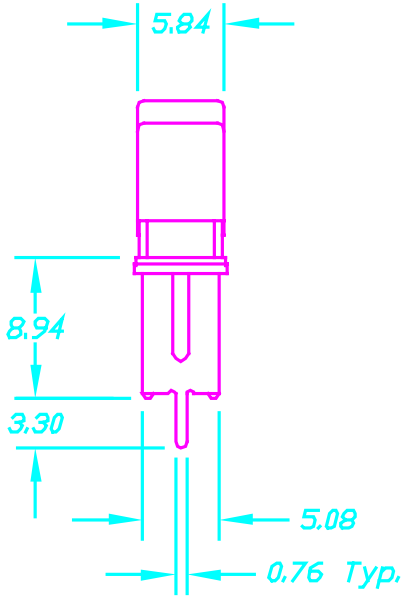

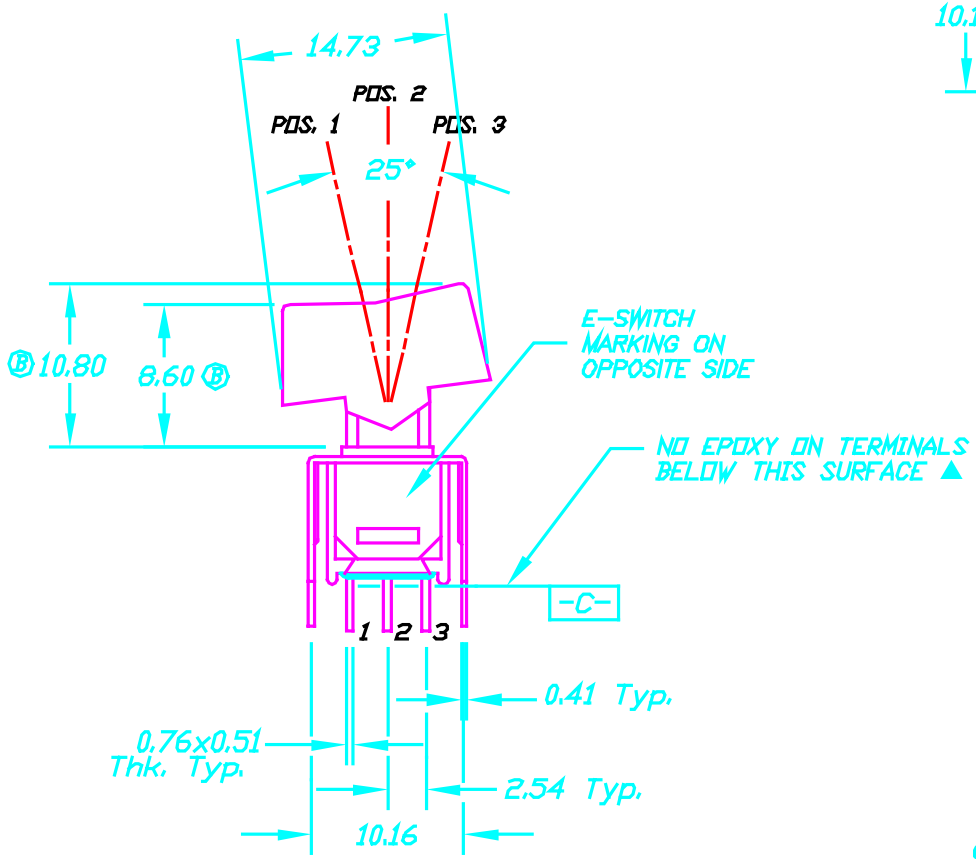

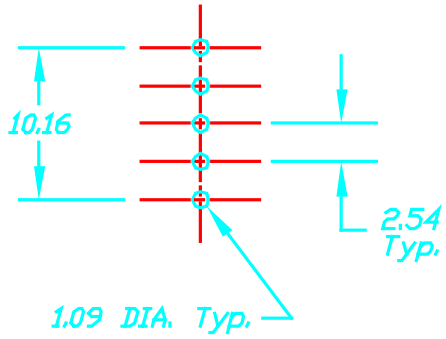

RECOMMEND P.C.B. LAYOUT

CIRCUIT: SPDT
CONTACT CONFIGURATION

SWITCH FUNCTION		
POS. 1	POS. 2	POS. 3
ON	NONE	ON
2-3	OPEN	2-1

NOTES:

1. ALL DIMENSIONS IN MM
2. GENERAL TOLERANCE: 0.0=±0.4
   0.00=±0.25
3. CONTACT RATING: 0.4(VA) max. @20VAC or DC max.
4. FIXED TERMINAL & MOVING CONTACT: Cu alloy w/Au plate over Ni plate.
5. ELECTRICAL LIFE: 30,000 make-and-break cycles at full load.
6. INSULATION RESISTANCE: 1,000M Ohms min.
7. DIELECTRIC STRENGTH: 1,000 V RMS @sea level.
8. OPERATING TEMP.: -30°C to 85°C

REV.	ECN No.	DESCRIPTION	DATE	CHKD
A	10276	RELEASED FOR PRODUCTION		

THE INFORMATION CONTAINED IN THIS DOCUMENT IS PROPRIETARY TO E-SWITCH AND IS NOT TO BE COPIED OR TRANSFERRED

E-SWITCH®

TITLE 400 MSP-1 R6/BLK VS2 R E

SCALE	DATE	DR	DWG	REV
2:1	7/14/99	MM	T411018	A