SHEET OF

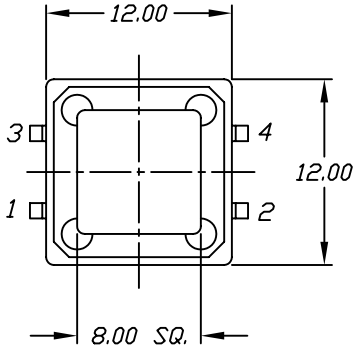

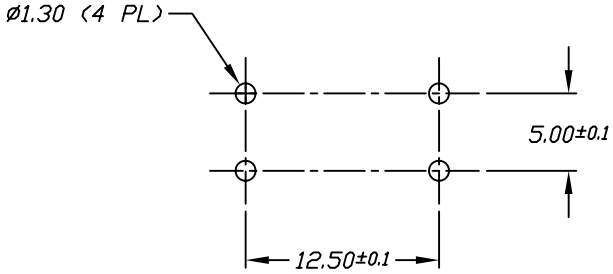

RECOMMEND P.C.B. LAYOUT

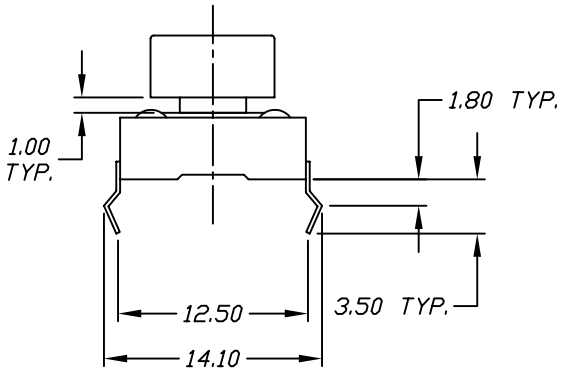

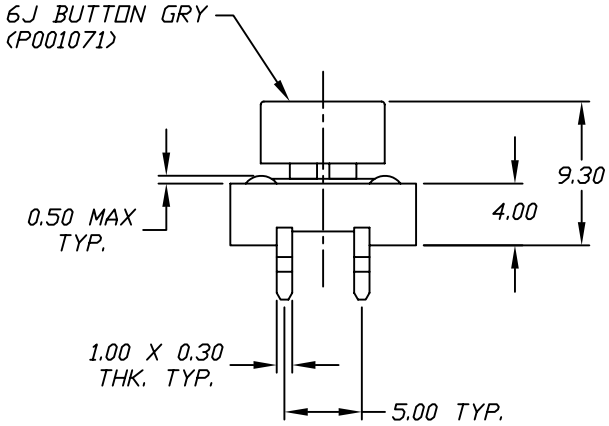

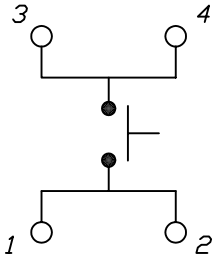

CIRCUIT: SPST

CONTACT CONFIGURATION

NOTES:
1. ALL DIMENSIONS IN MM
2. GENERAL TOLERANCE: X.X=±0.4, X.XX=±0.25
3. TERM. NOS. FOR REF. ONLY
4. RATING: 50mA, @12VDC
5. TRAVEL: 0.30±0.15mm
6. OPERATING FORCE: 160±50gf
7. CONTACT RESISTANCE: 100 MILLI-OHMS MAX
8. ELECTRICAL LIFE: 100,000 CYCLES MIN

REV.	ECN No.	DESCRIPTION	DATE	CHKD
A	11093	RELEASED FOR PRODUCTION	12/07/00	PML

THE INFORMATION CONTAINED IN THIS DOCUMENT IS PROPRIETARY TO E-SWITCH AND IS NOT TO BE COPIED OR TRANSFERRED

E-SWITCH®

TITLE				
TL 1100 F160 Q/6J GRY				
SCALE	DATE	DR	DWG	REV
2:1	12/07/00	PML	XP0174P	A