ADSP-21262 EZ-KIT Lite®
Evaluation System Manual

Revision 1.2, March 2004

Part Number
82-000800-01

Analog Devices, Inc.
One Technology Way
Norwood, Mass. 02062-9106

Copyright Information

Printed in the USA.

Limited Warranty

The EZ-KIT Lite evaluation system is warranted against defects in materials and workmanship for a period of one year from the date of purchase from Analog Devices or from an authorized dealer.

Disclaimer

Analog Devices, Inc. reserves the right to change this product without prior notice. Information furnished by Analog Devices is believed to be accurate and reliable. However, no responsibility is assumed by Analog Devices for its use; nor for any infringement of patents or other rights of third parties which may result from its use. No license is granted by implication or otherwise under the patent rights of Analog Devices, Inc.

Trademark and Service Mark Notice

The Analog Devices logo, VisualDSP++, the VisualDSP++ logo, SHARC, SHARC logo, CROSSCORE, the CROSSCORE logo, and EZ-KIT Lite are registered trademarks of Analog Devices, Inc.

All other brand and product names are trademarks or service marks of their respective owners.

Regulatory Compliance

The ADSP-21262 EZ-KIT Lite evaluation system has been certified to comply with the essential requirements of the European EMC directive 89/336/EEC (inclusive 93/68/EEC) and, therefore, carries the "**CE**" mark.

The ADSP-21262 EZ-KIT Lite evaluation system had been appended to the Technical Construction File referenced "**DSPTOOLS1**" dated December 21, 1997 and was awarded CE Certification by an appointed European Competent Body as listed below.

Technical Certificate No: Z600ANA1.013

Issued by: Technology International (Europe) Limited
41 Shrivenham Hundred Business Park
Shrivenham, Swindon, SN6 8TZ, UK

The EZ-KIT Lite evaluation system contains ESD (electrostatic discharge) sensitive devices. Electrostatic charges readily accumulate on the human body and equipment and can discharge without detection. Permanent damage may occur on devices subjected to high-energy discharges. Proper ESD precautions are recommended to avoid performance degradation or loss of functionality. Store unused EZ-KIT Lite boards in the protective shipping package.

CONTENTS

PREFACE

GETTING STARTED

USING EZ-KIT LITE

EZ-KIT LITE HARDWARE REFERENCE

PREFACE

Thank you for purchasing the ADSP-21262 EZ-KIT Lite®, Analog Devices (ADI) evaluation system for SHARC® processors.

The SHARC processors are based on a 32-bit super Harvard architecture that includes a unique memory architecture comprised of two large on-chip, dual-ported SRAM blocks coupled with a sophisticated IO processor, which gives SHARC the bandwidth for sustained high-speed computations. SHARC represents today's de facto standard for floating-point DSP targeted for premium audio applications.

The evaluation system is designed to be used in conjunction with the VisualDSP++® development environment to test the capabilities of the ADSP-21262 SHARC processors. The VisualDSP++ development environment gives you the ability to perform advanced application code development and debug, such as:

- Create, compile, assemble, and link application programs written in C++, C, and ADSP-21262 assembly
- Load, run, step, halt, and set breakpoints in application program
- Read and write data and program memory
- Read and write core and peripheral registers
- Plot memory

Access to the ADSP-21262 processor from a personal computer (PC) is achieved through a USB port or an optional JTAG emulator. The USB interface gives unrestricted access to the ADSP-21262 processor and the

evaluation board peripherals. Analog Devices JTAG emulators offer faster communication between the host PC and target hardware. Analog Devices carries a wide range of in-circuit emulation products. To learn more about Analog Devices emulators and DSP development tools, go to `http://www.analog.com/dsp/tools/`.

ADSP-21262 EZ-KIT Lite provides example programs to demonstrate the capabilities of the evaluation board.

The VisualDSP++ license provided with this EZ-KIT Lite evaluation system limits the size of a user program's code to 10922 words of program memory.

The board features:

- Analog Devices ADSP-21262 processor
  - 136-pin BGA package
  - 300 MHz Core Clock Speed
- Synchronous Read Access Memory (SRAM)
  - 512 Kbit x 8-bit
- Flash Memory
  - 1M x 8-bit
- Serial Peripheral Interconnect (SPI) Flash Memory
  - 512 Kbit
- Analog Audio Interface
  - AD1835A codec
  - 4x2 RCA phono jack for 4 channels of stereo output
  - 2x1 RCA phono jack for 1 channel of stereo input
  - Headphone jack for 1 channel stereo output

- Digital Audio Interface
  - CS8416 SPDIF receiver
  - RCA phono jack input
- LEDs
  - 12 LEDs: 1 power (green), 1 board reset (red), 1 USB reset (red), 1 USB monitor (amber), and 8 general purpose (amber)
- Push Buttons
  - 5 push buttons: 1 reset, 2 connected to DAI, 2 connected to DSP `FLAG` pins
- Expansion Interface (Type A)
  - Parallel Port, `FLAG`s, DAI, SPI
- Other Features
  - JTAG ICE 14-pin header
  - 0-ohm resistors for DSP current measurement
  - SPI header
  - DAI header

The EZ-KIT Lite board has a total of 1 MB of parallel Flash memory and 512 Kbit of SPI Flash memory. The Flash memories can store user-specific boot code, allowing the board to run as a stand-alone unit. For more information, see "Using External Memory" on page 2-2 and "Boot Mode and Clock Ratio Select Switch (SW10)" on page 3-11. The board also has 512 KB of SRAM, which can be used at runtime.

The DAI of the DSP connects to the AD1835A audio codec and the CS8416 SPDIF receiver. These devices allow you to create digital and analog audio signal processing applications. See "Using Analog Audio" on page 2-3 and "Using Digital Audio" on page 2-5 for more information.

Additionally, the EZ-KIT Lite board provides access to all of the processor's peripheral ports. Access is provided in the form of a three-connector expansion interface. See "Expansion Interface" on page 3-7 for details.

Purpose of This Manual

The *ADSP-21262 EZ-KIT Lite Evaluation System Manual* provides instructions for using the hardware and installing the software on your PC. The text includes guidelines for running your own code on the ADSP-21262 EZ-KIT Lite. The manual also describes the board's configuration and components. Finally, a schematic and a bill of materials are provided as a reference for future ADSP-21262 board designs.

Intended Audience

This manual is a user's guide and reference to the ADSP-21262 EZ-KIT Lite evaluation system. Programmers who are familiar with the Analog Devices SHARC processor architecture, operation, and programming are the primary audience for this manual.

Programmers who are unfamiliar with Analog Devices SHARC processors can use this manual in conjunction with the *ADSP-2126x SHARC Core Reference* and *ADSP-21262/21266 Peripherals Manual* and the *ADSP-21160 SHARC DSP Instruction Set Reference*, which describe the DSP'a architecture and instruction set. Programmers who are unfamiliar with VisualDSP++ should refer to the VisualDSP++ online Help and the VisualDSP++ user's or getting started guides. For the locations of these documents, see "Related Documents" on page -xviii.

Manual Contents

The manual consists of:

- Chapter 2, "Getting Started" on page 1-1
  Provides software and hardware installation procedures, PC system requirements, and basic board information.
- Chapter 2, "Using EZ-KIT Lite" on page 2-1
  Provides information on the EZ-KIT Lite from a programmer's perspective and provides an easy-to-access memory map.
- Chapter 3, "EZ-KIT Lite Hardware Reference" on page 3-1
  Provides information on the hardware aspects of the evaluation system.
- Appendix A, "Bill Of Materials" on page A-1
  Provides a list of components used to manufacture the EZ-KIT Lite board.
- Appendix B, "Schematics" on page B-1
  Provides the resources to allow modifications to the EZ-KIT Lite or to use as a reference design.
  This appendix is not part of the online Help. The online Help viewers should go the PDF version of the *ADSP-21262 EZ-KIT Lite Evaluation System Manual* located in the `Docs\EZ-KIT Lite Manuals` folder on the installation CD to see the schematics.

What's New in This Manual

This edition of the *ADSP-21262 EZ-KIT Lite Evaluation System Manual* includes the updated installation and license registration procedures.

Technical or Customer Support

You can reach DSP Tools Support in the following ways.

- Visit the DSP Development Tools website at

  `www.analog.com/technology/dsp/developmentTools/index.html`

- Email questions to

  `dsptools.support@analog.com`

- Phone questions to **1-800-ANALOGD**
- Contact your ADI local sales office or authorized distributor
- Send questions by mail to

  ```
  Analog Devices, Inc.
  One Technology Way
  P.O. Box 9106
  Norwood, MA 02062-9106
  USA
  ```

Supported Processors

The ADSP-21262 EZ-KIT Lite evaluation system supports Analog Devices ADSP-21262 SHARC DSPs.

Product Information

You can obtain product information from the Analog Devices website, from the product CD-ROM, or from the printed publications (manuals).

Analog Devices is online at www.analog.com. Our website provides information about a broad range of products—analog integrated circuits, amplifiers, converters, and digital signal processors.

MyAnalog.com

MyAnalog.com is a free feature of the Analog Devices website that allows customization of a webpage to display only the latest information on products you are interested in. You can also choose to receive weekly email notification containing updates to the webpages that meet your interests. MyAnalog.com provides access to books, application notes, data sheets, code examples, and more.

Registration:

Visit www.myanalog.com to sign up. Click **Register** to use MyAnalog.com. Registration takes about five minutes and serves as means for you to select the information you want to receive.

If you are already a registered user, just log on. Your user name is your email address.

DSP Product Information

For information on digital signal processors, visit our website at www.analog.com/dsp, which provides access to technical publications, data sheets, application notes, product overviews, and product announcements.

You may also obtain additional information about Analog Devices and its products in any of the following ways.

- Email questions or requests for information to dsp.support@analog.com
- Fax questions or requests for information to **1-781-461-3010** (North America) or **+49 (0) 89 76903-157** (Europe)

Related Documents

For information on product related development software, see the following publications.

Table 1. Related DSP Publications

Title	Description
ADSP-21262 SHARC Microprocessor Datasheet	General functional description, pinout, and timing
ADSP-2126x SHARC DSP Core Manual *ADSP-2126x SHARC DSP Peripherals Manual*	Description of internal processor architecture, registers, and all peripheral functions
ADSP-21160 SHARC DSP Instruction Set Reference	Description of all allowed processor assembly instructions

Table 2. Related VisualDSP++ Publications

VisualDSP++ 3.5 User's Guide for 32-Bit Processors	**Detailed description of VisualDSP++ 3.5 features and usage**
VisualDSP++ 3.5 Assembler and Preprocessor Manual for SHARC Processors	Description of the assembler function and commands for SHARC processors
VisualDSP++ 3.5 C/C++ Complier and Library Manual for SHARC Processors	Description of the complier function and commands for SHARC processors
VisualDSP++ 3.5 Linker and Utilities Manual for 32-Bit Processors	Description of the linker function and commands for the 32-bit processors
VisualDSP++ 3.5 Loader Manual for 32-Bit Processors	Description of the loader function and commands for the 32-bit processors
VisualDSP++ 3.5 User's Guide for 32-Bit Processors	Detailed description of VisualDSP++ 3.5 features and usage

The listed documents can be found through online Help or in the `Docs` folder of your VisualDSP++ installation. Most documents are available in printed form.

If you plan to use the EZ-KIT Lite board in conjunction with a JTAG emulator, refer to the documentation that accompanies the emulator.

Online Documentation

Your software installation kit includes online Help as part of the Windows® interface. These help files provide information about VisualDSP++ and the ADSP-21262 EZ-KIT Lite evaluation system.

To view VisualDSP++ Help, click on the **Help** menu item or go to the Windows task bar and select **Start –>Programs –>Analog Devices–>VisualDSP++ for 32-bit Processors –>VisualDSP++ Documentation**.

To view ADSP-21262 EZ-KIT Lite Help, which now is a part of the VisualDSP++ Help system, go the **Contents** tab of the Help window and select **Manuals –>Hardware Tools –>EZ-KIT Lite Evaluation Systems**.

For more documentation, please go to
`http://www.analog.com/technology/dsp/library.html`.

Printed Manuals

For general questions regarding literature ordering, call the Literature Center at **1-800-ANALOGD** (**1-800-262-5643**) and follow the prompts.

VisualDSP++ Documentation Set

Printed copies of VisualDSP++ manuals may be purchased through Analog Devices Customer Service at **1-781-329-4700**; ask for a Customer Service representative. The manuals can be purchased only as a kit. For additional information, call **1-603-883-2430**.

If you do not have an account with Analog Devices, you will be referred to Analog Devices distributors. To get information on our distributors, log onto `www.analog.com/salesdir/continent.asp`.

Hardware Manuals

Printed copies of hardware reference and instruction set reference manuals can be ordered through the Literature Center or downloaded from the Analog Devices website. The phone number is **1-800-ANALOGD** (**1-800-262-5643**). The manuals can be ordered by a title or by product number located on the back cover of each manual.

Data Sheets

All data sheets can be downloaded from the Analog Devices website. As a general rule, printed copies of data sheets with a letter suffix (L, M, N, S) can be obtained from the Literature Center at **1-800-ANALOGD** (**1-800-262-5643**) or downloaded from the website. Data sheets without the suffix can be downloaded from the website only—no hard copies are available. You can ask for the data sheet by part name or by product number.

If you want to have a data sheet faxed to you, the phone number for that service is **1-800-446-6212**. Follow the prompts and a list of data sheet code numbers will be faxed to you. Call the Literature Center first to find out if requested data sheets are available.

Contacting DSP Publications

Please send your comments and recommendations on how to improve our manuals and online Help. You can contact us at `dsp.techpubs@analog.com`.

Notation Conventions

The following table identifies and describes text conventions used in this manual.

Additional conventions, which apply only to specific chapters, may appear throughout this document.

Example	Description
Close command (**File** menu) or **OK**	Text in **bold** style indicates the location of an item within the VisualDSP++ environment's and boards' menu system and user interface items.
`{this | that}`	Alternative required items in syntax descriptions appear within curly brackets separated by vertical bars; read the example as `this` or `that`.
`[this | that]`	Optional items in syntax descriptions appear within brackets and separated by vertical bars; read the example as an optional `this` or `that`.
`[this,…]`	Optional item lists in syntax descriptions appear within brackets delimited by commas and terminated with an ellipsis; read the example as an optional comma-separated list of `this`.
`PF9-0`	Registers, connectors, pins, commands, directives, keywords, code examples, and feature names are in text with `letter gothic` font.
`filename`	Non-keyword placeholders appear in text with italic style format.
	A note providing information of special interest or identifying a related topic. In the online version of this book, the word **Note** appears instead of this symbol.
	A caution providing information about critical design or programming issues that influence operation of a product. In the online version of this book, the word **Caution** appears instead of this symbol.

1 GETTING STARTED

This chapter provides the information you need to begin using ADSP-21262 EZ-KIT Lite evaluation system. For correct operation, install the software and hardware in the order presented in "Installation Tasks" on page 1-3.

The chapter includes the following sections.

- "Contents of EZ-KIT Lite Package" on page 1-1
  Provides a list of the components shipped with this EZ-KIT Lite evaluation system.
- "PC Configuration" on page 1-3
  Describes the minimum requirements for the PC to work with the EZ-KIT Lite evaluation system.
- "Installation Tasks" on page 1-3
  Describes the step-by-step procedures for setting up the hardware and software.

Contents of EZ-KIT Lite Package

Your ADSP-21262 EZ-KIT Lite evaluation system package contains the following items.

- ADSP-21262 EZ-KIT Lite board
- *EZ-KIT Lite Installation Procedure*

- CD containing:
  - VisualDSP++ 3.5 for 32-bit processors with a limited license
  - ADSP-21262 EZ-KIT Lite debug software
  - USB driver files
  - Example programs
  - *ADSP-21262 EZ-KIT Lite Evaluation System Manual* (this document)
- *VisualDSP++ 3.5 Installation Quick Reference Card*
- Universal 7.5V DC power supply
- USB 2.0 type cable
- Registration card (please fill out and return)

If any item is missing, contact the vendor where you purchased your EZ-KIT Lite or contact Analog Devices, Inc.

The EZ-KIT Lite evaluation system contains ESD (electrostatic discharge) sensitive devices. Electrostatic charges readily accumulate on the human body and equipment and can discharge without detection. Permanent damage may occur on devices subjected to high-energy discharges. Proper ESD precautions are recommended to avoid performance degradation or loss of functionality. Store unused EZ-KIT Lite boards in the protective shipping package.

PC Configuration

For correct operation of the VisualDSP++ software and the EZ-KIT Lite, your computer must have the minimum configuration:

Windows 98, Windows 2000, Windows XP
Intel (or comparable) 166MHz processor
VGA Monitor and color video card
2-button mouse
50 MB free on hard drive
32 MB RAM
Full-speed USB port
CD-ROM Drive

EZ-KIT Lite does not run under Windows 95 or Windows NT.

Installation Tasks

The following task list is provided for the safe and effective use of the ADSP-21262 EZ-KIT Lite. Follow the instructions in the presented order to ensure correct operation of your software and hardware.

1. VisualDSP++ and EZ-KIT Lite software installation
2. VisualDSP++ license installation and registration
3. EZ-KIT Lite hardware setup
4. EZ-KIT Lite USB driver installation
5. USB driver installation verification
6. VisualDSP++ startup

Installing VisualDSP++ and EZ-KIT Lite Software

This EZ-KIT Lite comes with the latest version of VisualDSP++ 3.5 for 32-bit processors. VisualDSP++ installation includes EZ-KIT Lite installations.

To install VisualDSP++ and EZ-KIT Lite software:

1. Insert the VisualDSP++ installation CD into the CD-ROM drive.
2. If Autoplay is enabled on your PC, you see the **Install Shield Wizard Welcome** screen. Otherwise, choose **Run** from the **Start** menu, and enter `D:\ADI_Setup.exe` in the **Open** field, where `D` is the name of your local CD-ROM drive.
3. Follow the on-screen instructions to continue installing the software.
4. At the **Custom Setup** screen, select your EZ-KIT Lite from the list of available systems and choose the installation directory. Click an icon in the **Feature Description** field to see the selected system's description. When you have finished, click **Next**.
5. At the **Ready to Install** screen, click **Back** to change your install options, click **Install** to install the software, or click **Cancel** to exit the install.
6. When the EZ-KIT Lite installs, the **Wizard Completed** screen appears. Click **Finish**.

Installing and Registering VisualDSP++ License

VisualDSP++ and EZ-KIT Lites are licensed products. You may run only one copy of the software for each license purchased. Once a new copy of the VisualDSP++ or EZ-KIT Lite software is installed on your PC, you must install, register, and validate your licence.

The *VisualDSP++ 3.5 Installation Quick Reference Card* included in your package will guide you through the licence installation and registration process (refer to Tasks 1, 2, and 3).

Setting Up EZ-KIT Lite Hardware

The EZ-KIT Lite evaluation system contains ESD (electrostatic discharge) sensitive devices. Electrostatic charges readily accumulate on the human body and equipment and can discharge without detection. Permanent damage may occur on devices subjected to high-energy discharges. Proper ESD precautions are recommended to avoid performance degradation or loss of functionality. Store unused EZ-KIT Lite boards in the protective shipping package.

The ADSP-21262 EZ-KIT Lite board is designed to run outside your personal computer as a stand-alone unit. You do not have to open your computer case.

To connect the EZ-KIT Lite board:

1. Remove the EZ-KIT Lite board from the package. Be careful when handling the board to avoid the discharge of static electricity, which may damage some components.
2. Figure 1-1 shows the default jumper settings, DIP switch, connector locations, and LEDs used in installation. Confirm that your board is set up in the default configuration before continuing.

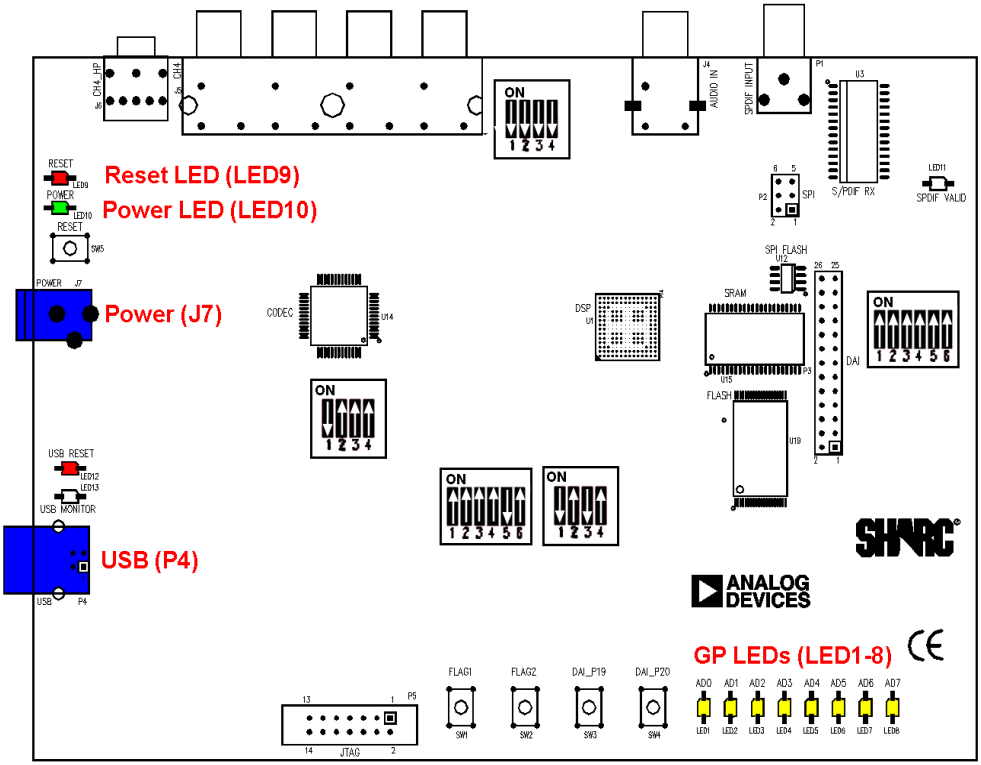

Figure 1-1. EZ-KIT Lite Hardware Setup

3. Plug the provided power supply into J7 on the EZ-KIT Lite board. Visually verify that the green power LED (LED10) is on. Also verify that the two red reset LEDs (LED9 and LED12) go on for a moment and then go off, and, finally, LED8-1 are continually blinking.

4. Connect one end of the USB cable to an available full speed USB port on your PC and the other end to P4 on the ADSP-21262 EZ-KIT Lite board.

Installing EZ-KIT Lite USB Driver

The EZ-KIT Lite evaluation system installed on the following platforms requires one full-speed USB port.

- "Windows 98 USB Driver" on page 1-8 describes the installation on Windows 98.
- "Windows 2000 USB Driver" on page 1-12 describes the installation on Windows 2000.
- "Windows XP USB Driver" on page 1-13 describes the installation on Windows XP.

The USB driver used by the debug agent is not Microsoft certified because it is intended for a development or laboratory environment, not a commercial environment.

Windows 98 USB Driver

Before using the ADSP-21262 EZ-KIT Lite for the first time, the Windows 98 USB driver must first be installed.

To install the USB driver:

1. Insert the CD into the CD-ROM drive.
   The connection of the device to the USB port activates the Windows 98 **Add New Hardware Wizard** shown in Figure 1-2.

Figure 1-2. Windows 98 – Add New Hardware Wizard

2. Click **Next**.

3. Select **Search for the best driver for your device**, as shown in Figure 1-3.

Figure 1-3. Windows 98 – Searching for Driver

4. Click **Next**.
5. Select **CD-ROM drive**, as shown in Figure 1-4.

Figure 1-4. Windows 98 – Searching for CD-ROM

6. Click **Next**.
   Windows 98 locates the `WmUSBEz.inf` file on the installation CD, as shown in Figure 1-5.

Figure 1-5. Windows 98 – Locating Driver

7. Click **Next**.
   The **Coping Files** dialog box appears (Figure 1-6).

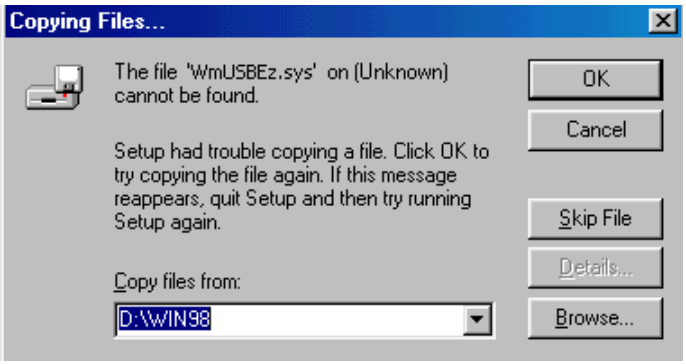

Figure 1-6. Windows 98 – Searching for .SYS File

8. Click **Browse**.
   The **Open** dialog box, shown in Figure 1-7, appears on the screen.

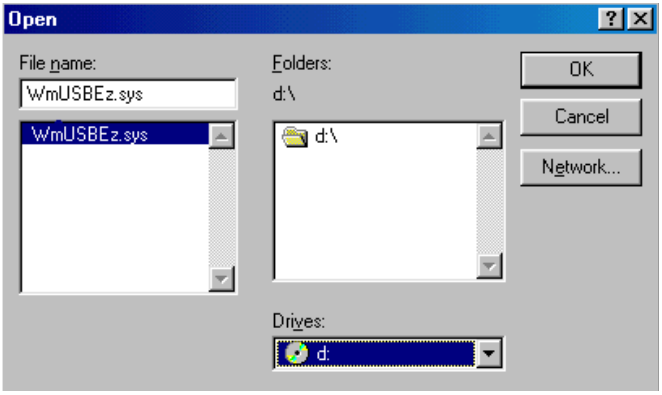

Figure 1-7. Windows 98 – Opening .SYS File

9. In **Drives**, select your CD-ROM drive.

10. Click **OK**. The **Copying Files** dialog box (Figure 1-8) appears.

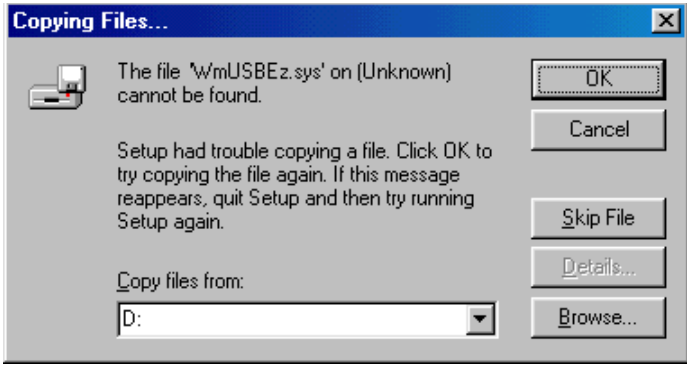

Figure 1-8. Windows 98 – Copying .SYS File

11. Click **OK**.
    The driver installation is now complete, as shown in Figure 1-9.

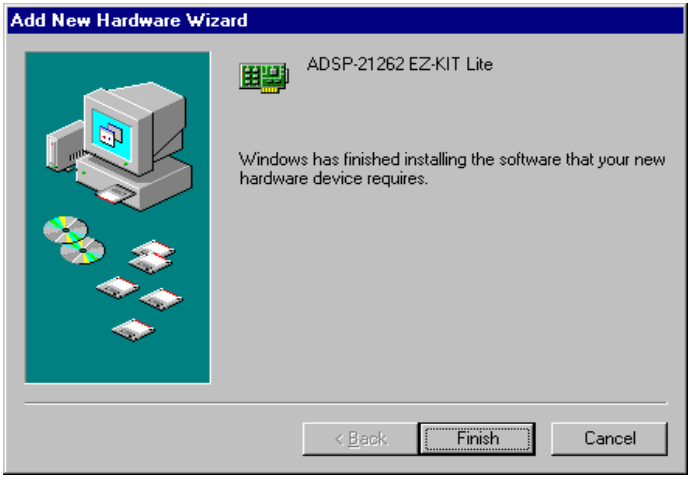

Figure 1-9. Windows 98 – Completing Software Installation

12. Click **Finish** to exit the wizard.

Verify the installation by following the instructions in "Verifying Driver Installation" on page 1-15.

Windows 2000 USB Driver

VisualDSP++ 3.5 installation software pre-installs the necessary drivers for the selected EZ-KIT Lite. The install also upgrades an older driver if such is detected in the system.

Prior to running the VisualDSP++ 3.5 installer, ensure there are no other Hardware Wizard windows running in the background. If there are any wizard windows running, close them before starting the installer.

To install the USB driver:

1. If VisualDSP++ 3.5 is already installed on your system, go to step 2. Otherwise, run VisualDSP++ 3.5 installation. Refer to the *VisualDSP++ 3.5 Installation Quick Reference Card* for a detailed installation description. When installing VisualDSP++ 3.5 on Windows 2000, make sure the appropriate EZ-KIT Lite component is selected for the installation.

2. Connect the EZ-KIT Lite device to your PC's USB port. Windows 2000 automatically detects an EZ-KIT device and automatically installs the appropriate driver for the selected device (see step 1).

3. Verify the installation by following the instructions in "Verifying Driver Installation" on page 1-15.

Windows XP USB Driver

VisualDSP++ 3.5 installation software pre-installs the necessary drivers for the selected EZ-KIT Lite. The install also upgrades an older driver if such is detected in the system.

Prior to running the VisualDSP++ 3.5 installer, ensure there are no other Hardware Wizard windows running in the background. If there are any wizard windows running, close them before starting the installer.

To install the USB driver:

1. If VisualDSP++ 3.5 is already installed on your system, go to step 2. Otherwise, run VisualDSP++ 3.5 installation. Refer to the *VisualDSP++ 3.5 Installation Quick Reference Card* for a detailed

installation description. When installing VisualDSP++ 3.5 on Windows XP, make sure the appropriate EZ-KIT Lite component is selected for the installation.

2. Connect the EZ-KIT Lite device to your PC's USB port.
   By connecting the device to the USB port you activate the Windows XP **Found New Hardware Wizard**, shown in Figure 1-10.

Figure 1-10. Windows XP – Found New Hardware Wizard

3. Select **Install the software automatically** (**Recommended**) and click **Next**.

When Windows XP completes the driver installation for the selected device (see step 1), a window shown in Figure 1-11 appears on the screen.

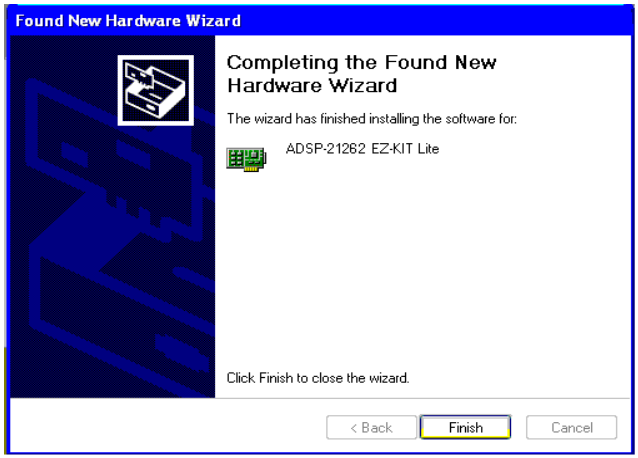

Figure 1-11. Windows XP – Completing Driver Installation

4. Verify the installation by following the instructions in "Verifying Driver Installation".

Verifying Driver Installation

Before launching the EZ-KIT Lite evaluation system, verify that the USB driver software is installed properly:

1. Ensure that the USB cable connects to the evaluation board and the PC.
2. Verify that the yellow USB monitor LED (`LED11`) is lit. This signifies that the board is communicating properly with the host PC and is ready to run VisualDSP++.

3. Verify that the USB driver software is installed properly.

   Open Windows **Device Manager** and verify that **ADSP-21262 EZ-KIT Lite** shows under **DSP Emulators** with no exclamation point, as in Figure 1-12.

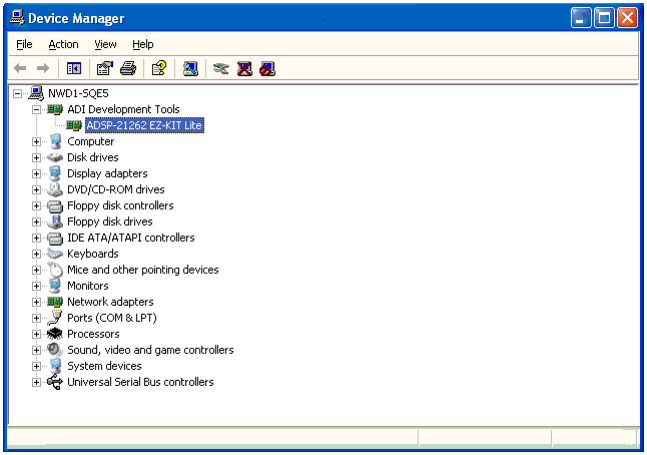

Figure 1-12. Device Manager Window

If using an EZ-KIT Lite on Windows 98, disconnect the USB cable from the board before booting the PC. When Windows 98 is booted and you are logged on, re-connect the USB cable to the board. The operation should continue normally from this point.

Starting VisualDSP++

To set up a session in VisualDSP++:

1. Verify that the yellow USB monitor LED (`LED11`, located near the USB connector) is lit. This signifies that the board is communicating properly with the host PC and is ready to run VisualDSP++.

2. Press and hold down the keyboard **Control** (CTRL) key.

3. Select the **Start** button on the Windows taskbar, then choose **Programs–>Analog Devices–>VisualDSP++ 3.5 for 32-bit processors–>VisualDSP++ Environment**.
   If you are running VisualDSP++ for the first time, go to step 5. If you already have existing sessions, the **Session List** dialog box appears on the screen.

4. Click **New Session**.

5. The **New Session** dialog box, shown in Figure 1-13, appears on the screen.

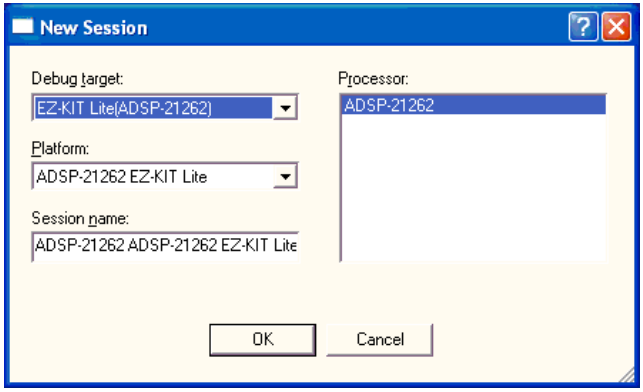

Figure 1-13. New Session Dialog Box

6. In **Debug Target**, choose **EZ-KIT Lite** (**ADSP-21262**).

7. In **Processor**, choose the appropriate processor, **ADSP-21262**.

8. Type a new target name in **Session Name** or accept the default name.

9. Click **OK** to return to the **Session List**. Highlight the new session and click **Activate**.

2 USING EZ-KIT LITE

This chapter provides specific information to assist you with developing programs for the ADSP-21262 EZ-KIT Lite evaluation system. This information appears in the following sections.

- "Using EZ-KIT Lite VisualDSP++ Interface" on page 2-8
  Describes the trace, performance monitoring, boot loading, context switching, and target options facilities of the EZ-KIT Lite system.

For detailed information on how to program the ADSP-21262 SHARC processor, refer to the documents referenced in "Related Documents".

EZ-KIT Lite License Restrictions

The license shipped with the EZ-KIT Lite imposes the following restrictions.

- The size of a user program's code is limited to 10922 words of the ADSP-21262 processor's program memory.
- No connections to Simulator or Emulator sessions are allowed.
- The EZ-KIT Lite hardware must be connected and powered up in order to use VisualDSP++ with a kit license.

Using External Memory

The EZ-KIT Lite contains three types of memory: parallel Flash (1 MB), SPI Flash (512 Kbit) and SRAM (512 Kbit). The Flash memories can store user-specific boot code, letting the board to run as a stand-alone unit. For more information about setting the boot device for the DSP, see "Boot Mode and Clock Ratio Select Switch (SW10)" on page 3-11.

Table 2-1 provides a map of the board's external memory.

The parallel Flash memory and the SRAM connect to the parallel port of the DSP. The parallel port is a multiplexed address and data port. The port can connect to 8-bit and 16-bit memory devices. When configuring the parallel port, keep in mind that the memory devices on the board are 8 bits wide.

Table 2-1. EZ-KIT Lite Evaluation Board External Memory

Start Address	End Address	Content
0x0100 0000	0x010F FFFF	Flash memory
0x0120 0000	0x012F FFFF	SRAM memory
0x0140 0000	0x0140 FFFF	LEDs (see "LEDs and Push Buttons" on page 3-12).
0x0160 0000	0x017F FFFF	Unused chip select 1
0x0180 0000	0x019F FFFF	Unused chip select 2

To access the SRAM and Flash memories, set up a Parallel Port DMA. For more information on how to connect the SRAM and Flash memories, see "Parallel Port" on page 3-3.

The SPI Flash memory connects to the DSP's SPI port and uses `Flag0` as a chip select. In order for `FLAG0` to behave as a chip select, clear the `PPFLG` bit in the `SYSCLT` register.

An example program is included in the EZ-KIT installation directory to demonstrate how the parallel port and SPI port can be configured to access the memories.

Using Analog Audio

The AD1835A is a high-performance, single-chip codec featuring four stereo digital-to-analog converters (DAC) for audio output and one stereo analog-to-digital converters (ADC) for audio input. The codec can input and output data with a sample rate of up to 96 kHz on all channels. A 192 kHz sample rate can be used with the one of the DAC channels.

The DSP is interfaced with the AD1835A via the DAI port. The DAI interface pins can be configured to transfer serial data from the AD1835A codec in either time-division multiplexed (TDM) or I^2S mode. For more information on how the AD1835A connects to the DAI, see "DAI Interface" on page 3-4.

The master input clock (MCLK) for the AD1835A can be generated by the on-board 12.288 MHz oscillator or can be supplied by one of the DAI pins of the DSP. Using one if the pins to generate the MCLK, as opposed to the on-board oscillator, allows synchronization of multiple devices in the system. This is done on the EZ-KIT Lite when data is coming from the SPDIF receiver and being output through the audio codec. The SPDIF MCLK is routed to the AD1835A MCLK in the DSP's SRU. It is also necessary to disable the on-board audio oscillator from driving the audio codec and the DSP's input pin. For instructions on how to configure the clock, refer to "Codec Setup Switch (SW7)" on page 3-9.

The AD1835A codec can be configured as a master or as a slave, depending on DIP switch settings. In master mode, the AD1835A drives the serial port clock and frame sync signals to the DSP. In slave mode, the DSP must generate and drive all of the serial port clock and frame sync signals. For information on how to set the mode, refer to "Codec Setup Switch (SW7)" on page 3-9.

The AD1835A audio codec's internal configuration registers are configured using the DSP's SPI port. The `FLAG3` register is used as the select for the device. For information on how to configure the multichannel codec, refer to the codec datasheet, which can be found at `www.analog.com`.

The RCA connector (`J4`) is used to input analog audio. When using an electret microphone on this connector, configure the `SW6` switch according the instructions in "Electret Microphone Select Switch (SW6)" on page 3-9. The four output channels connect to the RCA connector `J5`. Channel 4 of the codec connects to the headphone jack `J6`. For more information about the connectors see "Connectors" on page 3-15.

Example programs are included in the EZ-KIT installation directory to demonstrate how to configure and use the board's analog audio interface.

Using Digital Audio

The CS8416 is a monolithic CMOS device which receives and decodes one of eight channels of audio data according to the IEC60958, S/PDIF, EIAJ CP1201, or AES3 interface standards. The CS8416 receives data from a transmission line, recovers the clock and synchronization signals, and de-multiplexes the audio and digital data.

The CS8416 is attached to the DAI port of the processor. The configuration registers of the SPDIF receiver are programmed via an SPI, which is connected to the processor's SPI. The SPDIF receiver is capable of transmitting a variety of data formats, which are set up via the SPI interface. For more information about the CS8416 and DAI connection, see "DAI Interface" on page 3-4.

The SPDIF input signal is input on `P1` via a coax connector.

To output the audio received by the CS8416 via the AD1835A audio codec, the master clock of both chips must be synchronized to prevent the loss of samples. Put the AD1835A in slave mode and disconnect the 12.288 MHz oscillator from the master clock (MCLK) input (see "Codec Setup Switch (SW7)" on page 3-9 for how to).

The CS8416 general purpose output 1 (`GPO1`) is connected to `LED11`, and can be configured, via the SPI, to indicate a variety of conditions within the SPDIF receiver.

Shipped with the kit example programs demonstrate how to configure and use the board's digital audio interface.

Using LEDs and Push Buttons

The EZ-KIT Lite has eight general-purpose user LEDs and four general-purpose push buttons.

Two of the general-purpose push buttons are attached to the DSP's FLAG pins, while the other two are attached to the DAI pins. All of the push buttons connect to the DSP through a DIP switch. The DIP switch allows DSP pins, which connect to the push buttons, to be disconnected. See "Push Button Enable Switch (SW9)" on page 3-10 for instructions on how to disable the push buttons from driving the corresponding DSP pin.

The value of the push buttons connected to the FLAG pins can be determined by reading the FLAG register. The push buttons connected to the DAI pins must be configured as interrupts. It is necessary to set up an interrupt routine to determine each pin's state. Table 2-2 shows how each push button connects to the DSP. Refer to the related example program shipped with the EZ-KIT Lite for more information.

Table 2-2. Push Button Connections

Push Button Reference Designator	DSP Pin
SW1	FLAG1
SW2	FLAG2
SW3	DAI19
SW4	DAI20

The LEDs are connected to the parallel port pins, AD7-0, via a latch. The parallel port of the DSP can be set up as a memory bus or as general-purpose FLAG pins. The latch allows the LEDs to be written to in both cases. Information about setting up the latch can be found in "SPDIF Signal Enable Switch (SW8)" on page 3-10.

When the LEDs are accessed as FLAG pins, the latch must be set up to pass through the data on the DSP's pins AD7-0. In this mode, it is also necessary to set up the parallel port to be FLAG pins. To set up the parallel port as FLAG pins, set the PPFLGS bit in the SYSCTL register. Table 2-3 summarizes the LED and FLAG connections.

Table 2-3. LED Connections

LED Reference Designator	DSP Pin	Mapped as FLAG
LED1	AD0	FLAG8
LED2	AD1	FLAG9
LED3	AD2	FLAG10
LED4	AD3	FLAG11
LED5	AD4	FLAG12
LED6	AD5	FLAG13
LED7	AD6	FLAG14
LED8	AD7	FLAG15

An example program is included in the EZ-KIT installation directory to demonstrate the functionality of the LEDs and push buttons.

Example Programs

Example programs are provided with the ADSP-21262 EZ-KIT Lite to demonstrate various capabilities of the evaluation board. These programs are installed with the EZ-KIT Lite software and can be found in \…\VisualDSP 3.5 32-Bit\212xx\EZ-KITs\ADSP-21262\Examples. Please refer to the readme file provided with each example for more information.

Background Telemetry Channel

Some USB debug agents support the Background Telemetry Channel (BTC), which facilitates data exchange between VisualDSP++ and the processor without interrupting DSP execution.

This revision of the ADSP-21262 EZ-KIT Lite does not support the Background Telemetry.

Using EZ-KIT Lite VisualDSP++ Interface

This section provides information about the following parts of the VisualDSP++ graphical user interface:

- "Boot Load" on page 2-8
- "Target Options" on page 2-9
- "Core Hang Conditions" on page 2-11
- "Hardware Breakpoints" on page 2-12

Boot Load

Choosing **Boot Load** from the **Settings** menu runs the processor and performs a hard reset on the board. This command saves you from having to shut down VisualDSP++, reset the EZ-KIT Lite board, and bring up VisualDSP++ again when you want to perform a hard reset.

Use this feature when loading debug boot code from an external part or when you want to put the device into a known state.

Target Options

Choosing **Target Options** from the **Settings** menu opens the **Target Options** dialog box (Figure 2-1). Use target options to control certain aspects of the processor on the ADSP-21262 EZ-KIT Lite evaluation system.

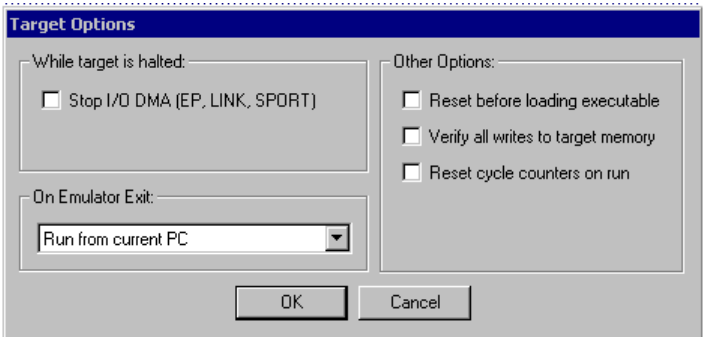

Figure 2-1. Target Options Dialog Box

While Target is Halted and On Emulator Exit Options

This target option controls the processor's behavior when VisualDSP++ relinquishes DSP control (for example, when exiting VisualDSP++). The options are detailed in Table 2-4 and Table 2-5.

Table 2-4. While Target is Halted Options

Option	Description
Stop I/O DMA	Stops IO DMAs in emulator space. This option disables DMA requests when the emulator has control of the DSP. Data in the **EP**, **LINK**, or **SPORT DMA** buffers are held there unless the internal **DMA** request was already granted. This option holds off incoming data and ceases outgoing data. Because SPORT-receive data cannot be held off, it is lost, and the overrun bit is set. The direct write buffer (internal memory write) and the EP pad buffer are allowed to flush any remaining data to internal memory.

Table 2-5. On Emulator Exit Options

Option	Description
On Emulator Exit	Determines the state the DSP is left in when the emulator relinquishes control of the DSP: **Reset DSP and Run** causes the DSP to reset and begin execution from its reset vector location. **Run from current PC** causes the DSP to begin running from its current location.

Other Options

Table 2-6 describes other available target options.

Table 2-6. Other Target Options

Option	Description
Reset before loading executable	Resets registers before loading a DSP executable. Clear this option when DSP registers must not change to their reset values when a file load occurs.
Verify all writes to target memory	Validates all memory writes to the DSP. After each write, a read is performed and the values are checked for a matching condition. Enable this option during initial program development to locate and fix initial build problems (such as attempting to load data into non-existent memory). Clear this option to increase performance while loading executable files since VisualDSP++ does not perform the extra reads that are required to verify each write.
Reset cycle counters on run	Resets the cycle count registers to zero before a **Run** command is issued. Select this option to count the number of cycles executed between breakpoints in a program.

Core Hang Conditions

Certain peripheral devices, such as host ports, DMA, and link ports, can hold off the execution of processor instructions. This is known as a hung condition and commonly occurs when reading from an empty port or writing to a full port. If an attempt to halt the processor is made during one of these conditions, the EZ-KIT Lite may encounter a core hang.

Normally, a core hang can be cleared by the board using a special clear/abort bit. However, there are cases in which it is desirable or possible not to clear the core hang. Sometimes it is desirable to wait for the core hang to clear itself, such as when waiting for a host processor to read or write data. In other cases, it is not possible to clear the core hang, and a DSP reset must occur to continue the debugging session.

Table 2-7 describes the EZ-KIT Lite's core hang operations.

Table 2-7. Core Hang Operations

Option	Description
Abort	Abort the hung operation. This causes the offending instruction to be aborted in the pipeline.
Retry	Allows you to remedy the hung operation. For example, if a host processor is holding off the DSP, you can cause the host to clear the hung condition.
Ignore	Performs a software reset on the target board.
Clear	Aborts the hung operation. This causes the offending instruction to be aborted in the pipeline.
Acknowledge	Allows you to remedy the hung operation. For example, if a host processor is holding off the DSP, you can cause the host to clear the hung condition.
Reset	Performs a software reset on the target board.

Hardware Breakpoints

Hardware breakpoints work similarly to watchpoints. Set hardware breakpoints on:

- Data transfers within a user-defined memory range
- Instructions
- Register reads and writes

To enable hardware breakpoints for ADSP-21262 DSPs:

1. From the **Settings** menu, choose **Hardware Breakpoints**.
2. The **Hardware Breakpoints** dialog box appears. The dialog box has three tabbed pages: **Data**, **Instruction**, and **Other** (Figure 2-2).

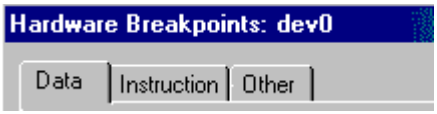

Figure 2-2. Hardware Breakpoints Dialog Box

Refer to the following sections for information about hardware breakpoints.

- "Common Hardware Breakpoint Attributes" on page 2-13
- "Global Hardware Breakpoint Options" on page 2-14
- "Data Hardware Breakpoints" on page 2-14
- "Instruction Hardware Breakpoints" on page 2-15
- "Other Breakpoints" on page 2-17
- "Tips and Tricks Using Hardware Breakpoints" on page 2-18

Common Hardware Breakpoint Attributes

Each of the three tabs in the **Hardware Breakpoints** dialog box has common attributes. The common attributes are described in Table 2-8.

Table 2-8. Common Hardware Breakpoint Attributes

Attribute	Description
Enable	Enables each individual breakpoint.
Start Address **End Address**	Specify inclusive start and end addresses. Each pair of addresses sets up an address range for the particular breakpoint.
Exclusive	Enables breaks outside of the specified (inclusive) address range.
Mode	**Data** page and **Other** page only. This option specifies the modes that trigger hardware breakpoints. The available choices are: **Disabled**—disables the breakpoint **On Write**—triggers the breakpoint on any write operation to the specified address range **On Read**—triggers the breakpoint on any read operation from the specified address range **Any Access**—triggers the breakpoint on any read or write access to the specified address range.

Global Hardware Breakpoint Options

For ADSP-21262 DSPs, the options listed in Table 2-9 apply to all hardware breakpoints, regardless of their type.

Table 2-9. Global Hardware Breakpoint Options

Option	Description
Skip N Breakpoint Events	Specifies the number of breakpoint events to be ignored before stopping the processor. Each time a hardware breakpoint condition occurs, the count decrements. When the count reaches zero (0), the DSP processes the hardware break. Use this option to count the number of times a break operation occurs. Breakpoints within the group are ORed together to create this condition.
Restore Skip Count on Break	Enables skip-count decrement as specified in **Skip N Breakpoint Events**.
Restore Skip Count on Break	Causes the emulator to restore the Skip Count to the value at program RESTART. Otherwise, the Skip Count remains at its current value.
AND All Breakpoints	ANDs the interrupts to form the composite interrupt. Normally, the group interrupts are ORed to create a composite interrupt.

Data Hardware Breakpoints

For ADSP-21262 DSPs, use data breakpoints to break on accesses to internal memory, IOP registers, the external port (EP), and multiprocessor memory space (MMS).

The following actions trigger a data breakpoint:

- DAG1 access
- DM() modifier access

The two data breakpoints are ORed to generate a single data breakpoint condition.

The **Data** page of the **Hardware Breakpoints** dialog box, which permits the specification of two data breakpoints, is shown in Figure 2-3.

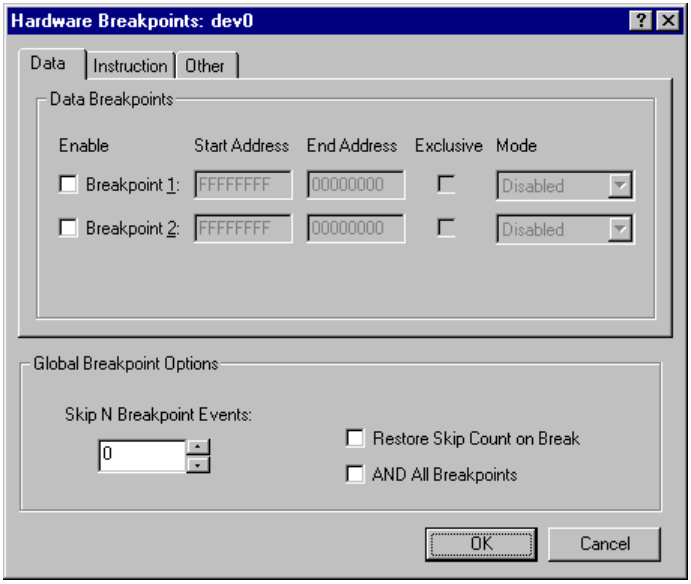

Figure 2-3. Data Page of Hardware Breakpoints Dialog Box

Instruction Hardware Breakpoints

For ADSP-21262 DSPs, an instruction breakpoint occurs when an instruction is executed within one of the specified address ranges. The four individual instruction breakpoints are ORed to generate a single instruction breakpoint condition.

Shown below is the **Instruction** page of the **Hardware Breakpoints** dialog box, which permits the specification of four individual instruction breakpoints.

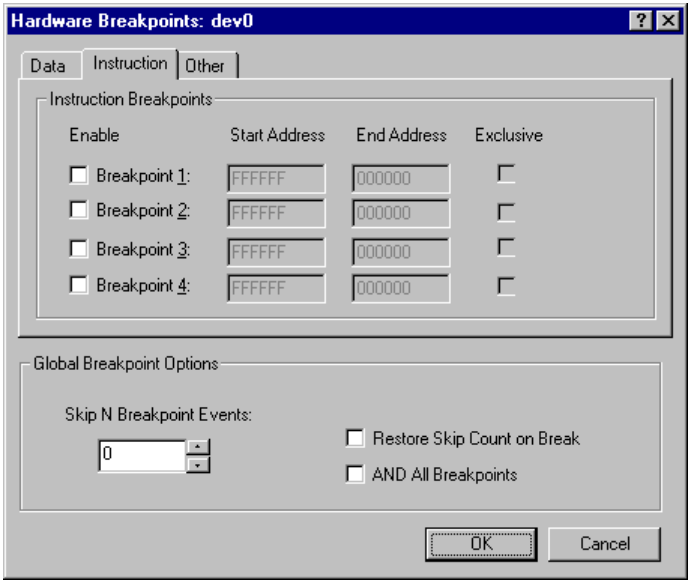

Figure 2-4. Instruction Page of Hardware Breakpoints Dialog Box

Other Breakpoints

For SHARC DSPs, the **Other** page of the **Data Breakpoints** dialog box permits the specification of hardware breakpoints triggered by access to PM data, IO, or the external port.

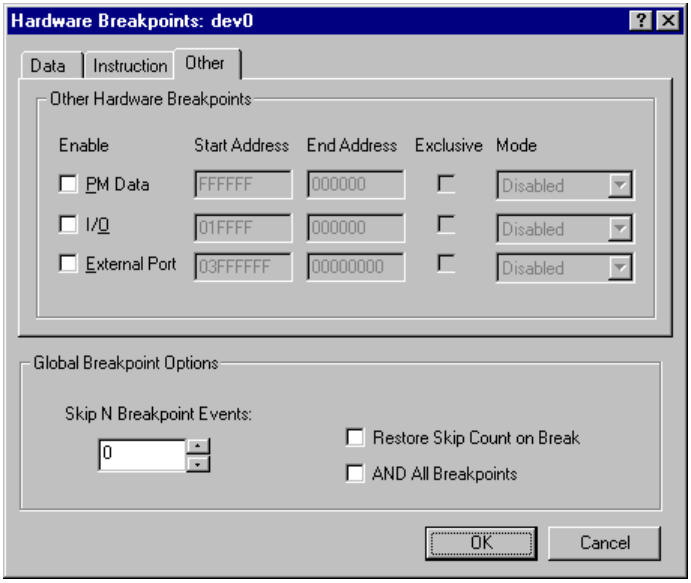

Figure 2-5. Other Page of Hardware Breakpoints Dialog Box

Table 2-10. Other Hardware Breakpoint Options

Option	Description
PM DataEvents	Enables PM data breakpoints.PM data breakpoints are similar to data breakpoints (Data page), except accesses that trigger a PM breakpoint are made by DAG2 or the PM() modifier. Like data breakpoints, PM data breakpoints cause a break on accesses to internal memory, IOP registers, the external port (EP), and multiprocessor memory space (MMS).
I/O	Enables IO breakpoints.IO breakpoints are triggered by accesses made on the IO Address Bus. Use an IO breakpoint to break on accesses made during DMA transfers, MMS accesses, and Host accesses.

Table 2-10. Other Hardware Breakpoint Options (Cont'd)

Option	Description
External Port	Enables external port breakpoints.External port (EP) breakpoints are triggered by accesses made through the External Port. Use an EP breakpoint to break on accesses made to any external device that may be tied to the EP, such as external memory.
AND All Breakpoints	ANDs the interrupts to form the composite interrupt. Normally, the group interrupts are ORed to create a composite interrupt.

Tips and Tricks Using Hardware Breakpoints

Be aware of the following tips and tricks when using hardware breakpoints on ADSP-21262 processors.

Latency

For SHARC processors, hardware breakpoints do not assert until two (2) instruction cycles after the actual break condition occurs

Restrictions

When using hardware breakpoints, do not place breaks at any address where a `JUMP`, `CALL`, or `IDLE` instruction would be illegal.

Do not place breaks in the last few instructions of a `DO LOOP` or in the delay slots of a delayed branch. For more information on these illegal locations, refer to your DSP's Hardware Reference.

Setting a Breakpoint on a Single Address

To set a breakpoint on a single address, set the **Start Address** equal to the **End Address**.

3 EZ-KIT LITE HARDWARE REFERENCE

This chapter describes the hardware design of the ADSP-21262 EZ-KIT Lite board. The following topics are covered.

- "System Architecture" on page 3-2
  Describes the configuration of the ADSP-21262 board and explains how the board components interface with the DSP.
- "DIP Switch Settings" on page 3-8
  Shows the location and describes the function of the DIP switches.
- "LEDs and Push Buttons" on page 3-12
  Shows the location and describes the function of the LEDs and push buttons.
- "Connectors" on page 3-15
  Shows the location and gives the part number for all of the connectors on the board. Also, the manufacturer and part number information is given for the mating parts.

System Architecture

This section describes the processor's configuration on the EZ-KIT Lite board.

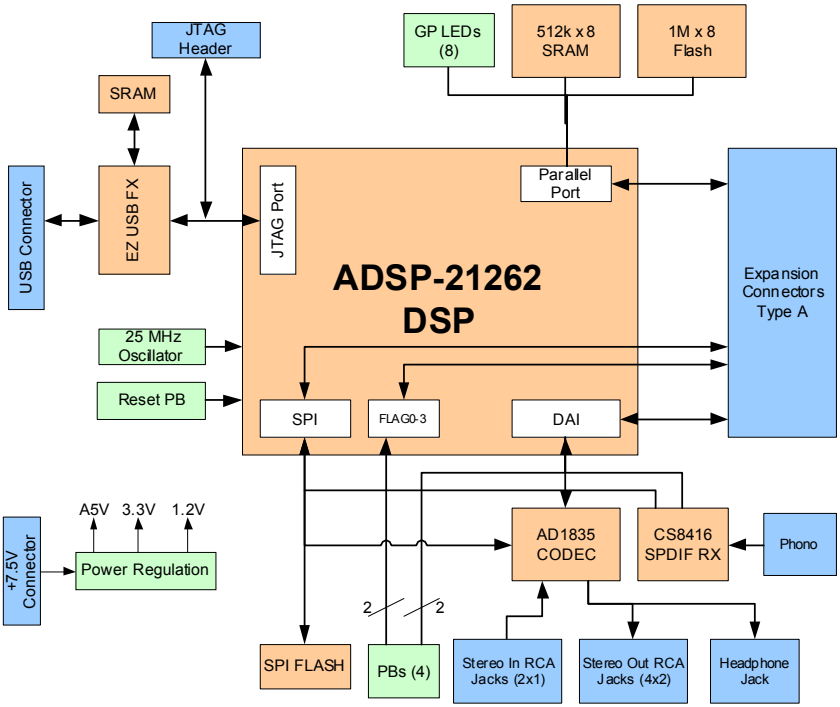

Figure 3-1. System Architecture Block Diagram

The EZ-KIT Lite has been designed to demonstrate the capabilities of the ADSP-21262 DSP. The DSP core is powered at 1.2V, and the IO is powered at 3.3V. Two 0-ohm resistors give access to the DSP's power planes and allow to measure the power consumption of the processor. The R79 resistor provides access to the IO voltage of the processor, and the R80 resistor provides access to the core voltage plane of the processor.

The CLKIN pin of the DSP connects to a 25 MHz oscillator. The core frequency of the DSP is derived by multiplying the frequency at the CLKIN pin by a value determined by the state of the DSP pins, CLKCFG1 and CLKCFG0. The value at these pins is determined by the state of the SW10 switch (see "Boot Mode and Clock Ratio Select Switch (SW10)" on page 3-11). By default, the EZ-KIT Lite gives a core frequency of 200 MHz.

The SW10 switch also configures the boot mode of the DSP. The EZ-KIT Lite is capable of Parallel Port boot and SPI Master Boot. By default, the EZ-KIT Lite boots from the parallel port. For information about configuring the boot modes, see "Boot Mode and Clock Ratio Select Switch (SW10)" on page 3-11.

Parallel Port

The parallel port (PP) of the ADSP-21262 DSP consists of a 16-bit multiplex address/data memory bus (AD15-0) and an address latch-enable pin (ALE). The interface does not have any memory select pins; these signals must be generated by decoding the address.

The PP connections to the EZ-KIT Lite are shown in Figure 3-2. The PP is connected to an 8-bit parallel Flash memory, an 8-bit SRAM memory, and eight general-purpose LEDs. The upper three address bits are connected to a 3-to-8 decoder, providing eight memory select pins. See "Using External Memory" on page 2-2 for more information about accessing the Flash and SDRAM memories.

Because the PP is a multiplexed address/data memory bus, two 8-bit latches are used to latch the upper address bits. Additional latch is used to drive the LEDs. The latter allows the LED values to be written to as if they were at a memory location. For more information about using the LEDs, refer to the "Using LEDs and Push Buttons" on page 2-6.

All of the PP signals are available externally via the expansion interface connectors (J3-1). The pinout of the connectors can be found in "Schematics" on page B-1.

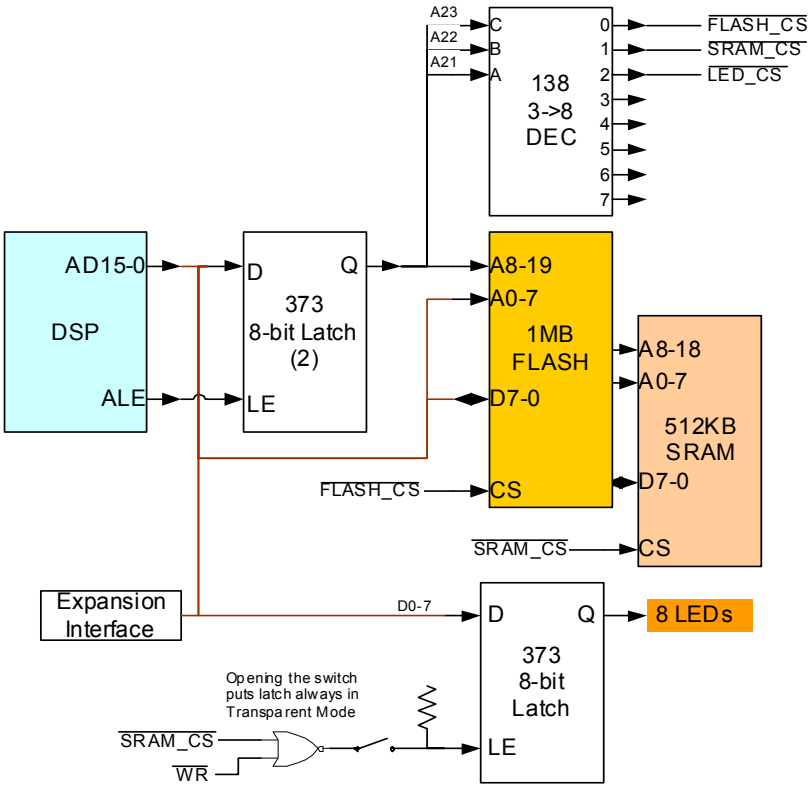

Figure 3-2. Parallel Port Connections Block Diagram

DAI Interface

The pins of the Digital Application Interface (DAI) connect to the signal routing unit (SRU). The SRU is a flexible routing system, providing a large system of signal flows within the DSP. In general, the SRU allows to route the DAI pins to different internal peripherals in various combinations.

The DAI pins are connected to the AD1835A audio codec, the CS8414 SPDIF receiver, the audio oscillator output, and two push buttons. Figure 3-3 illustrates the EZ-KIT Lite's connections to the DAI.

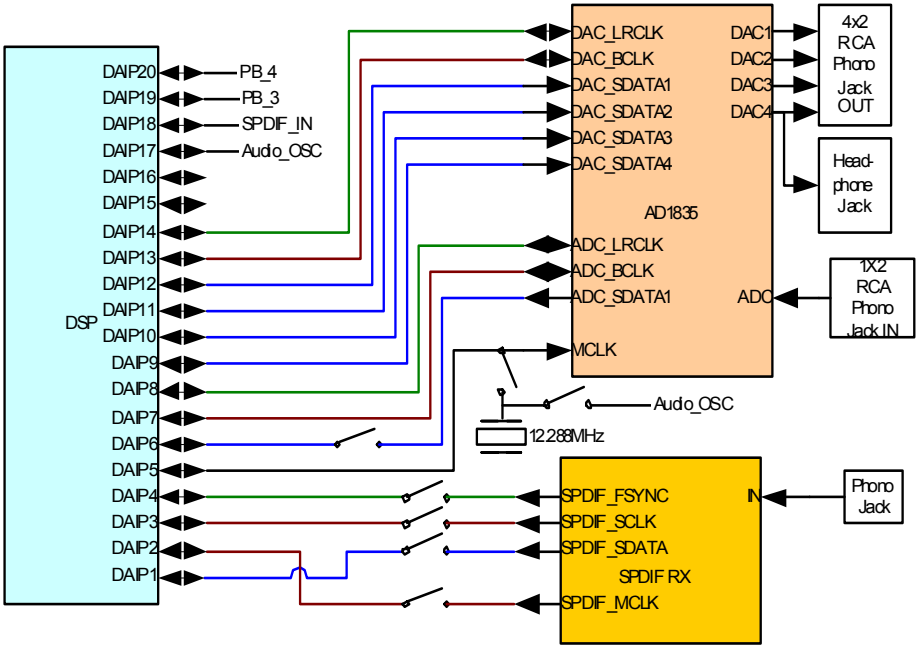

Figure 3-3. DAI Connections Block Diagram

Refer to "Using Analog Audio" on page 2-3 and "Using Digital Audio" on page 2-5 for more information about setting up the DSP to communicate with these devices.

To use the DAI for a different purpose, disable any signal, which is driving the DAI pins, with a switch. See "Codec Setup Switch (SW7)" on page 3-9 and "SPDIF Signal Enable Switch (SW8)" on page 3-10 for how to. In addition, the codec setup switch allows flexible routing of the 12.288 MHz audio oscillator's output signal. By default, this signal is used as the master clock (`MCLK`) for the AD1835A codec.

SPI Interface

The DSP's serial peripheral interconnect (SPI) interface is connected to an SPI Flash memory, the CS8416 SPDIF receiver, and the AD1835A audio codec. The FLAG0 pin is used as a memory select for accessing the SPI Flash memory, and the FLAG3 pin is used for accessing the AD1835A's configuration registers.

All of the SPI signals are available externally via the expansion interface connectors (J3-1), as well as the 0.1' spaced header P2. The pinout of these connectors can be found in "Schematics" on page B-1.

FLAG Pins

The DSP has four general-purpose IO FLAG pins. Table 3-1 describes the connection of each flag.

Table 3-1. IO FLAG Pins

FLAG Pin	EZ-KIT Lite Function
FLAG0	SPI Flash chip select
FLAG1	Push button (SW1) input
FLAG2	Push button (SW2) input
FLAG3	AD1835A SPI interface chip select

For information on how to disable the push buttons from driving the corresponding DSP flag pin, see section "Push Button Enable Switch (SW9)" on page 3-10.

The FLAG signals are available externally via the expansion interface connectors (J3-1). The pinout of these connectors can be found in "Schematics" on page B-1.

Expansion Interface

The expansion interface consists of the three 90-pin connectors. Table 3-2 shows the interfaces each connector provides. For the exact pinout of these connectors, refer to Appendix B, "Schematics" on page B-1. The mechanical dimensions of the connectors can be obtained from Technical or Customer Support.

Table 3-2. Expansion Interface Connectors

Connector	Interfaces
J1	5V, AD15-0
J2	3.3V, FLAG3-0, DAI_P20-1, SPI
J3	5V, 3.3V, Reset, Parallel Port Control signals

Limits to the current and to the interface speed must be taken into consideration when using the expansion interface. The maximum current limit is dependent on the capabilities of the used regulator. Additional circuitry can also add extra loading to signals, decreasing their maximum effective speed.

Analog Devices does not support and is not responsible for the effects of additional circuitry.

JTAG Emulation Port

The JTAG emulation port allows an emulator to access the DSP's internal and external memory through a 6-pin interface. The JTAG emulation port of the processor is also connected to the USB debugging interface. When an emulator connects to the board at P8, the USB debugging interface is disabled. This is not the standard connection of the JTAG interface.

For information about the standard connection of the interface, see *EE-68* published on the Analog Devices website. For more information about the JTAG connector, see "JTAG Header (P5)" on page 3-19. To learn more about available emulators, contact Analog Devices (see "Product Information").

DIP Switch Settings

Figure 3-4 shows the location and default settings of the EZ-KIT Lite DIP switches.

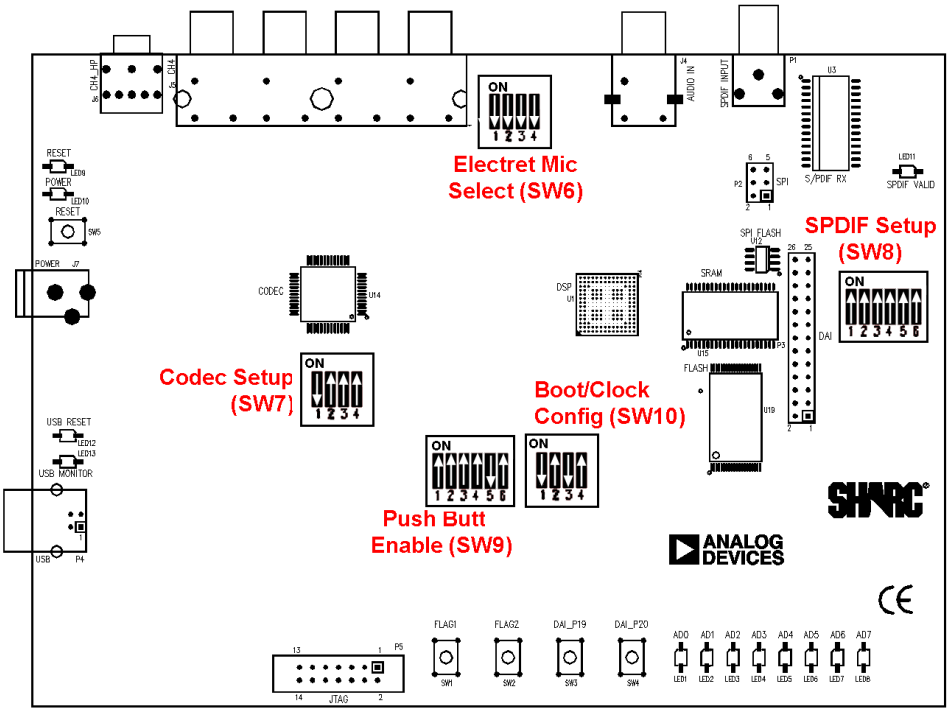

Figure 3-4. DIP Switch Locations and Default Settings

Electret Microphone Select Switch (SW6)

To connect an electret microphone to the audio input, place all positions of the SW6 switch "ON". The default position of this switch is all "OFF". When all of the switches are in the "ON" position, a DC offset of 2.5V is added to the signal, and gain of the input amplifiers is changed from 1x to 10x.

Codec Setup Switch (SW7)

The codec setup switch (SW7) can be used to change the routing of some of the signals going to the AD1835A codec and to setup the communication protocol of the codec.

Positions 1 and 2 determine the clock routing for the audio oscillator to the codec and to the DSP. Figure 3-5 illustrates how the switch positions 1 and 2 are connected on the board. In the default position, route the DAI_P17 pin to DAI_P6 (in software) to clock the AD1835A.

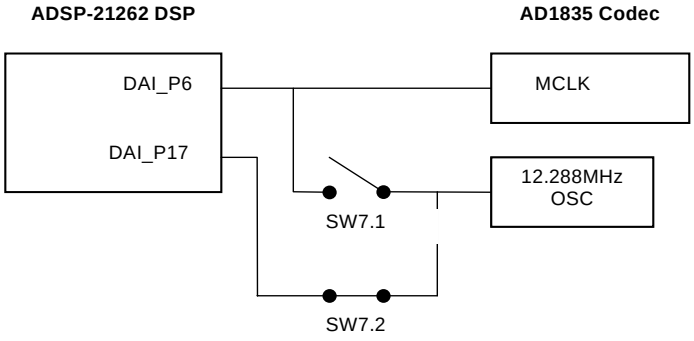

Figure 3-5. Audio Clock Routing

Position 3 of the SW7 switch determines if the AD1835A device is a master or is a slave. If the AD1835A is a master, the device's serial interface generates the frame sync and clock signals necessary to transfer data. When

the device is a slave, the DSP must generate the frame sync and clock signals. By default, position 3 is "ON", and the AD1835A generates the control signals.

Position 4 of SW7 disconnects the AD1835A's ADC_DATA pin from the DAI interface. This is useful when the DAI interface is to connect to another device.

SPDIF Signal Enable Switch (SW8)

The SPDIF signal enable switch (SW8) disconnects always driving signal of the CS8416 SPDIF receiver serial interface.

Table 3-3 shows which DSP signal is no longer being driven when the corresponding switch position is placed in the "OFF" position.

Table 3-3. SW8 Connections

Switch Position	DSP Pin	SPDIF RX Pin
1	DAI_P2	MCK
2	DAI_P1	SDATA
3	DAI_P4	FSYNC
4	DAI_P3	SCK
5	DAI_P15	SPI_CS
6	DAI_P16	GPOO

Push Button Enable Switch (SW9)

The push button enable switch (SW9) disconnects the push buttons from the corresponding DSP pins. This allows the signals to be used for another purpose. Table 3-4 shows the signal and SW9 connections. By default, all of the position of the SW9 switch are "ON", allowing the push buttons to function as designed.

Table 3-4. Push Button Enable Switch (SW9) Connections

Switch Position	Push Button Reference Designator	DSP Pin
1	SW1	FLAG1
2	SW2	FLAG2
3	SW3	DAI19
4	SW4	DAI20

Position 6 of SW9 connects or disconnects the latch-enable pin of the LED to the logical "OR" of the ~WE and ~LED_CS signals. When position is "OFF", the latch-enable pin of the LED latch ((U24) is always pulled "HIGH", making the latch transparent. In this position, the value of the LEDs is directly connected to AD7-0. When position 6 is "ON", the values of the LEDs are set by writing to a memory location. The lower 8 bits of the data written to the address 0x1400 0000 set the values of the LEDs. By default, position 6 is "ON", allowing the LEDs to be written by writing to a memory address. For more information refer to "Using LEDs and Push Buttons" on page 2-6.

Boot Mode and Clock Ratio Select Switch (SW10)

The SW10 switch sets the boot mode and clock multiplier ration. Table 3-5 shows how to set up the boot mode using positions 1 and 2. By default, the EZ-KIT Lite boots in SPI master mode and Parallel Port mode, and the DSP boots from Flash memory.

Table 3-5. Boot Mode Configuration

BOOTCFG1 Pin (Position 2)	BOOTCFG0 Pin (Position 1)	Boot Mode
OFF	OFF	SPI Slave Boot
OFF	ON	SPI Master Boot

Table 3-5. Boot Mode Configuration (Cont'd)

BOOTCFG1 Pin (Position 2)	BOOTCFG0 Pin (Position 1)	Boot Mode
ON	**OFF**	**Flash Boot**[1]
ON	ON	Internal Boot Mode

1 Bold typeface denotes the default setting.

Table 3-6 shows how to set up the clock multiply ratio using positions 3 and 4. By default, the DSP increases the clock multiply ratio by 8, setting the core clock to 300 MHz.

Table 3-6. Core Clock Rate Configuration

CLKCFG1 (Position 4)	CLKCFG0 (Position 3)	Core to CLKIN Ratio
OFF	OFF	3:1
OFF	ON	16:1
ON	**OFF**	**8:1**[1]
ON	ON	NA

1 Bold typeface denotes the default ratio.

Loop-Back Test Switch (SW11)

The loop-back test switch (SW11) is connected to GPO1 of the CS8416. The functionality of GPO1 is programmable via SPI.

LEDs and Push Buttons

This section describes the functionality of the LEDs and push buttons. Figure 3-6 shows the locations of the LEDs and push buttons.

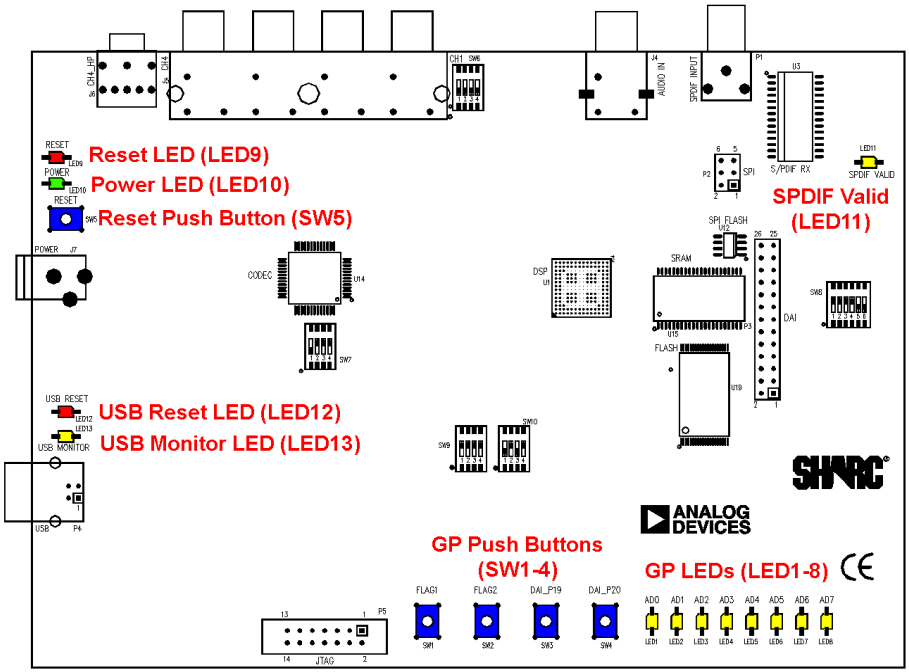

Figure 3-6. LED and Push Button Locations

General Purpose LEDs (LED8–1)

Eight general-purpose LEDs are connected to the DSP through a latch on signals `AD7-0`. These LEDs can be accessed by writing to the `FLAG` registers or by writing to a memory address. Refer to "Using LEDs and Push Buttons" on page 2-6 for more information.

Reset LEDs (LED9, LED12)

When LED9 is lit (red), the master reset of all the major ICs is active. When LED12 is lit (red), the USB interface chip (U34) is being reset. The USB chip is reset only on power-up, or if USB communication has not been initialized.

Power LED (LED10)

When LED10 is lit (green), it indicates that power is being properly supplied to the board.

SPDIF GPO1 LED (LED11)

The SPDIF GPO1 LED (LED11) connects to GPO1 of the CS8416. The functionality of GPO1 is programmable via SPI.

USB Monitor LED (LED13)

The USB monitor LED (LED13) indicates that USB communication has been initialized successfully and you may connect to the processor using a VisualDSP++ EZ-KIT Lite session. Once the USB cable is plugged into the board, it takes approximately 15 seconds for the USM monitor LED to light. If the LED does not light, try cycling power on the board and/or reinstalling the USB driver (see "Installing EZ-KIT Lite USB Driver" on page 1-7).

Push Buttons (SW4–1)

Four push buttons (SW4-1) are provided for general-purpose user input. Two of the push buttons are connected to the DSP's FLAG pins. The other two are connected to the DSP's DAI. The push buttons are active "HIGH" and, when pressed, send a High (1) to the processor. Refer to "Using LEDs and Push Buttons" on page 2-6 for more information. The push

button enable switch (SW9) is capable of disconnecting the push buttons from the corresponding DSP pin (refer to "Push Button Enable Switch (SW9)" on page 3-10 on page 3-10 for more information). The DSP signals and corresponding push buttons are summarized in Table 3-7.

Table 3-7. Push Button Connections

DSP Signal	Push Button Reference Designator	DSP Signal	Push Button Reference Designator
FLAG1	SW1	DAI_P19	SW3
FLAG2	SW2	DAI_P20	SW4

Board Reset Push Button (SW5)

The RESET push button (SW5) resets all of the ICs on the board. The only exception is the USB interface chip (U34). The chip is not being reset when the push button is pressed after the USB cable has been plugged in and communication correctly initialized with the PC. After USB communication has been initialized, the only way to reset the USB is by powering down the board.

Connectors

This section describes the connector functionality and provides information about mating connectors. Figure 3-7 shows the connector locations.

Expansion Interface (J1, J2, J3)

Three board-to-board connectors (J3-1) provide signals for most of the processor's peripheral interfaces. The connectors are located at the bottom of the board. For more information about the expansion interface, see "Expansion Interface" on page 3-7. For the J3-1 connectors' availability and pricing, contact Samtec.

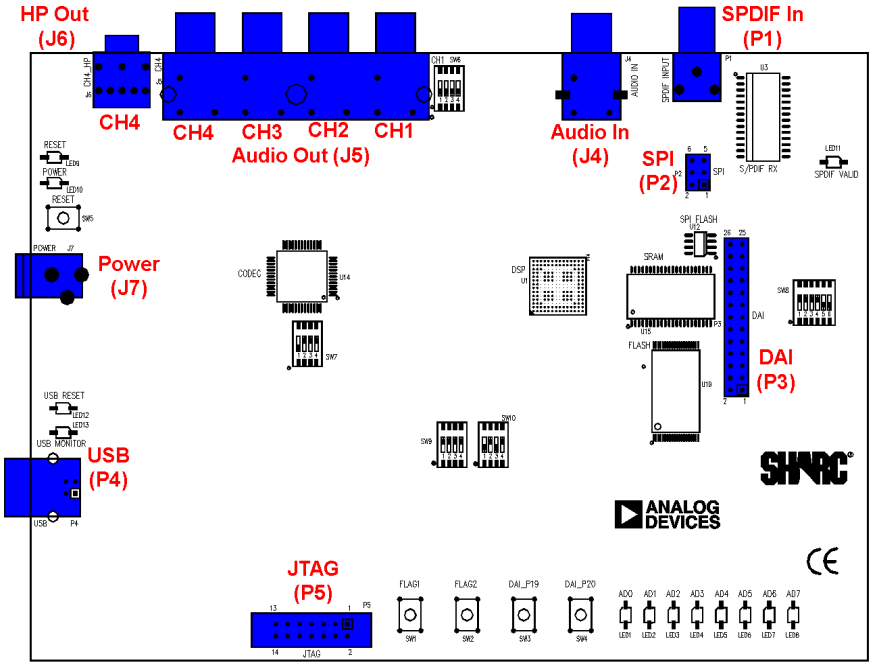

Figure 3-7. Connector Locations

Part Description	Manufacturer	Part Number
90 Position 0.05" Spacing, SMT (J1, J2, J3)	Samtec	SFC-145-T2-F-D-A
Mating Connector		
90 Position 0.05” Spacing (Through Hole)	Samtec	TFM-145-x1 Series
90 Position 0.05” Spacing (Surface Mount)	Samtec	TFM-145-x2 Series
90 Position 0.05” Spacing (Low Cost)	Samtec	TFC-145 Series

Audio In RCA Connector (J4)

Part Description	Manufacturer	Part Number
Two channel right angle RCA jack	SWITCHCRAFT	PJRAS1X2S02
Mating Cable		
Two channel RCA interconnect cable	Monster Cable	BI100-1M

Audio Out RCA Connector (J5)

Part Description	Manufacturer	Part Number
Six channel right angle RCA jack	SWITCHCRAFT	PJRAS2X2S01
Mating Cable		
Two channel RCA interconnect cable	Monster Cable	BI100-1M

Headphone Out Jack (J6)

Part Description	Manufacturer	Part Number
3.5mm stereo jack (J6)	Shogyo	SJ-0359AM-5

Power Jack (J7)

The power connector (J7) provides all of the power necessary to operate the EZ-KIT Lite board.

Part Description	Manufacturer	Part Number
2.5 mm Power Jack (J7)	SWITCHCRAFT Digi-Key	RAPC712 SC1152-ND
Mating Power Supply (shipped with EZ-KIT Lite)		
7.5V Power Supply	GlobTek	TR9CC2000LCP-Y

The power connector supplies DC power to the EZ-KIT Lite board. Table 3-8 shows the power supply specifications.

Table 3-8. Power Supply Specifications

Terminal	Connection
Center pin	+7.5 VDC@2A
Outer Ring	GND

SPDIF In Coax Connector (P1)

Part Description	Manufacturer	Part Number
Coaxial (P1)	SWITCHCRAFT	PJRAN1X1U01

SPI Header (P2)

The SPI connector (P2) provides access to all of the SPI signals in the from of a .1" spacing header. In addition, the FLAG1 signal can be used as a chip select. If you are using FLAG1 as a chip select, disable the push button associated with the flag. For more information, see "Push Button Enable Switch (SW9)" on page 3-10.

Part Description	Manufacturer	Part Number
6-pin IDC Header (P2)	Sullins	PTC04DAAN

DAI Header (P3)

The DAI connector (P3) provides access to all of the DAI signals in the from of a .1" spacing header. When using the header to access the DSP's DAI pins, ensure that signals, which normally drive the DSP's DAI pins,

are disabled. Refer to "Codec Setup Switch (SW7)" on page 3-9 for more information on how to disable signals already being driven from elsewhere on the EZ-KIT Lite.

Part Description	Manufacturer	Part Number
26-pin IDC Header (P3)	Berg	54102-T08-13

USB Connector (P4)

The USB connector (P4) allows to configure and program the DSP.

Part Description	Manufacturer	Part Number
Type B USB receptacle (P4)	Mill-Max Digi-Key	897-30-004-90-000 ED90003-ND

JTAG Header (P5)

The JTAG header (P5) is the connecting point for a JTAG in-circuit emulator pod. When an emulator is connected to the JTAG header, the USB debug interface is disabled.

Pin 3 is missing to provide keying. Pin 3 in the mating connector should have a plug.

When using an emulator with the EZ-KIT Lite board, follow the connection instructions provided with the emulator.

Part Description	Manufacturer	Part Number
14-pin IDC Header (P5)	Berg	54102-T08-07

A BILL OF MATERIALS

Reference	Quantity	Description	Reference Design	Manufacturer	Part Number
1	1	AM29LV08IB-120EC TSOP40 1M-X-8-FLASH-3V	U19	AMD	AM29LV081-120E
2	2	74LVC14A SOIC14 HEX-INVER-SCHMITT-TRIGGER	U28,U33	TI	74LVC14AD
3	1	CS8416 SOIC28 96KHZ-DIGI-TAL-AUDIO-RECVR	U3	CIRRUS LOGIC	CS8416
4	1	CY7C64603-128 PQFP128 USB-TX/RX MICROCON-TROLLER	U34	CYPRESS	CY7C64603-128N
5	1	MMBT4401 SOT-23 NPN TRANSISTOR 200MA	Q1	FAIRCHILD	MMBT4401
6	1	74LVC00AD SOIC14	U13	PHILIPS	74LVC00AD
7	1	CY7C1019BV33-15VC SOJ32 128K X 8 SRAM	U29	CYPRESS	CY7C1019BV33-1
8	1	AD8532AR SOIC8 DUAL AMP 250MA	U10	ANALOG DEVICES	AD8532AR

Reference	Quantity	Description	Reference Design	Manufacturer	Part Number
9	2	SN74AHC1G02 SOT23-5 SINGLE-2 INPUT-NOR	U26,U36	TI	SN74AHC1G02DB
10	1	SN74LV164A SOIC14 8-BIT-PARALLEL-SERIAL	U35	TI	SN74LV164AD
11	1	CY7C4201V-15AC TQFP32 64-BYTE-FIFO	U32	CYPRESS	CY7C4201V-15AC
12	1	25MHZ 1/2 OSC01 OSC	U16	DIGI-KEY	SG-8002DC-PCC-
13	1	12.0MHZ THR OSC006 CRYSTAL	Y1	DIG01	300-6027-ND
14	2	SN74AHC1G00 SOT23-5 SINGLE-2-INPUT-NAND	U20,U27	TI	SN74AHC1G00DB
15	1	12.288MHZ SMT OSC003 TS201/21262	U17	DIG01	SG-8002CA-PCC-
16	1	74LVC138AD SOIC16 3-TO-8-DEMUX	U25	PHILIPS	74LVC138AD
17	3	74LVC373APW TSSOP20 8-BIT-D-LATCH	U18,U21, U24	PHILIPS	74LVC373APW
18	1	21262 24LC00 “U23” SEE 1000127	U23	MICRO-CHIP	24LC00-SN
19	1	IS61LV5128AL TSOP44 512KX8-SRAM	U15	ISSI	IS61LV5128AL-10
20	1	AT25F512N SOIC8 SPI-FLASH-512KB	U12	ATMEL	AT25F512N-10SI-2
21	1	LTC1877 SOIC8 600MA ADJ SWITCHING REG	VR5	LINEAR TECH	LTC1877EMS8

Reference	Quantity	Description	Reference Design	Manufacturer	Part Number
22	2	1000pF 50V 5% 1206 CERM	C37–38	AVX	12065A102JAT2A
23	8	2200pF 50V 5% 1206 NPO	C67–74	AVX	12065A222JAT05
24	1	ADM708SAR SOIC8 VOLTAGE-SUPERVISOR	U22	ANALOG DEVICES	ADM708SAR
25	1	ADP3339AKC-33 SOT-223 3.3V 1.5A REGULATOR	VR2	ANALOG DEVICES	ADP3339AKC-3.3
26	2	ADP3336ARM MSOP8 ADJ 500MA REGULATOR	VR1,VR4	ANALOG DEVICES	ADP3336ARM-RE
27	8	AD8606AR SOIC8 OPAMP	U2,U4–9, U11	ANALOG DEVICES	AD8606AR
28	1	ADSP-21262SKBC-200 BGA136 SHARC-EX-DSP	U1	ANALOG DEVICES	ADSP-21262SKBC
29	1	AD1835AAS MQFP52 2IN-8OUT-96KHZ-CODEC	U14	ANALOG DEVICES	AD1835AAS
30	5	RUBBER FEET BLACK	MH1–5	MOUSER	517-SJ-5018BK
31	1	PWR 2.5MM_JACK CON005 RA	J7	SWITCH-CRAFT	SC1152-ND12
32	1	USB 4PIN CON009 USB	P4	MILL-MAX	897-30-004-90-00
33	1	RCA 4X2 CON011 RA	J5	SWITCH-CRAFT	PJRAS4X2U01
34	1	RCA 1X1 CON012 BLK	P1	SWITCH-CRAFT	PJRAN1X1U01

Reference	Quantity	Description	Reference Design	Manufacturer	Part Number
35	5	SPST-MOMENTARY SWT013 6MM	SW1–5	PANASONIC	EVQ-PAD04M
36	3	0.05 45X2 CON019 SMT SOCKET	J1–3	SAMTEC	SFC-145-T2-F-D-A
37	1	DIP8 SWT016	SW11	C&K	CKN1365-ND
38	1	DIP6 SWT017	SW8	DIG01	CKN1364-ND
39	4	DIP4 SWT018 4PIN-SMT-SWT	SW6–7, SW9–10	DIG01	CKN1363-ND
40	1	RCA RCA_1X2 CON031 RA	J4	SWITCH-CRAFT	PJRAS1X2S02
41	2	0.00 1/8W 5% 1206	R82,R91	YAGEO	0.0ECT-ND
42	10	AMBER-SMT LED001 GULL-WING	LED1–8, LED11,LED13	PANASONIC	LN1461C-TR
43	8	330pF 50V 5% 805 NPO	C104,C106,C108, C110,C11,C114,	AVX	08055A331JAT
44	18	0.01uF 100V 10% 805 CERM	C66, C75, C79, C85, C122, C127, C153, C155, C157–164, C166, C182	AVX	08051C103KAT2A
45	8	0.22uF 25V 10% 805 CERM	C77,C87,C99–102, C111,C131	AVX	08053C224FAT
46	27	0.1uF 50V 10% 805 CERM	C47,C57,C59, C120–121, C132–133	AVX	08055C104KAT

Reference	Quantity	Description	Reference Design	Manufacturer	Part Number
47	4	0.001uF 50V 5% 805 NPO	C82–83,C88,C98	AVX	08055A102JAT2A
48	44	10K 100MW 5% 805	R4, R17, R63–64, R66, R70–71, R74–78, R90, R92, R96–102, R107–108,	AVX	CR21-103J-T
49	4	33 100MW 5% 805	R68,R81,R109,R135	AVX	CR21-330JTR
50	3	4.7K 100MW 5% 805	R72,R95,R176	AVX	CR21-4701F-T
51	1	680 100MW 5% 805	R137	AVX	CR21-6800F-T
52	1	1M 100MW 5% 805	R168	AVX	CR21-1004F-T
53	1	475 100MW 5% 805	R125	AVX	CR21-471J-T
54	1	1.5K 100MW 5% 805	R105	AVX	CR21-1501F-T
55	2	2.00K 1/8W 1% 1206	R3,R5	DALE	CR32-2001F-T
56	10	49.9K 1/8W 1% 1206	R114–115, R117–124	AVX	CR32-4992F-T
57	2	2.21K 1/8W 1% 1206	R93–94	AVX	CR32-2211F-T
58	12	100pF 100V 5% 1206 NPO	C2–12,C64	AVX	12061A101JAT2A
59	2	10uF 16V 10% B TANT	CT13–14	AVX	TAJB106K016R
60	4	100 100MW 5% 805	R185–188	AVX	CR21-101J-T
61	2	301 1/4W 1% 1206	R1–2	BOURNS	CR1206-FX-3010

Reference	Quantity	Description	Reference Design	Manufacturer	Part Number
62	9	220pf 50V 10% 1206 NPO	C183	AVX	12061A221JAT2A
63	2	2A S2A_RECT DO-214AA SILICON RECTIFIER	D1–2	GENER-ALSEMI	S2A
64	7	600 100MHZ 500MA 1206 0.70 BEAD	FER1–2,FER4–8	DIGI-KEY	240-1019-1-ND
65	4	237 1/8W 1% 1206	R13–14,R18,R20	AVX	CR32-2370F-T
66	2	750K 1/8W 1% 1206	R11,R116	DALE/VISHAY	CRCW12067503F
67	4	5.76K 1/8W 1% 1206	R6,R10,R19,R22	PHYCOMP	9C12063A5761FK
68	10	11.0K 1/8W 1% 1206	R47,R49–50, R52–53,R55–56, R58, R113,R136	DALE	CRCW12061102F
69	1	68NF 50V 10% 805	C65	MURRATA	GRM40X7R683K0
70	7	1UF 16V 10% 805 X7R	C1,C39,C44,C48, C56,C58,C61	MURATA	GRM40X7R105K0
71	1	75 1/8W 5% 1206	R112	PHILIPS	9C12063A75R0JL
72	3	30PF 100V 5% 1206	C55	AVX	12061A300JAT2A
73	1	10 100MW 5% 805	R150	DALE	CRCW0805-10R0
74	1	249K 1/10W 1% 805	R86	DALE	CRCW0805-2493
75	1	124K 1/10W 1% 805	R83	DALE	CRCW0805-1243F
76	12	680PF 50V 1% 805 NPO	C76,C80–81,C89, C103,C105,C107	AVX	08055A681FAT2A

Reference	Quantity	Description	Reference Design	Manufacturer	Part Number
77	3	10UF 25V +80-20% 1210 Y5V	C46,C49,C60	MURATA	GRM235Y.5V106Z
78	8	2.74K 1/8W 1% 1206	R140–147	DALE	CRCW12062741F
79	20	5.49K 1/8W 1% 1206	R7,R15–16,R21, R25,R28,R31,R34,	PANASONIC	ERJ-8ENF5491V
80	8	1.65K 1/8W 1% 1206	R23,R26,R29,R32, R35,R38,R41,	PANASONIC	ERJ-8ENF1651V
81	10	10UF 16V 20% CAP002 ELEC	CT1–9,CT12	DIG01	PCE3062TR-ND
82	2	68UF 25V 20% CAP003 ELEC	CT10–11	PANASONIC	EEV-FC1E680P
83	1	10UH 47 +/-20 IND001	L1	DIG01	445-1202-2-ND
84	7	0.00 100MW 5% 805	R192	VISHAY	CRCW0805 0.0 R
85	1	190 100MHZ 5A FER002	FER3	MURATA	DLW5BSN191SQ2
86	8	3.32K 100MW 1% 805	R24,R27,R30,R33, R36,R39,R42,	DIG01	P3.32KCCTR-ND
87	4	1.2K 1/10W 5% 805	R155–158	DALE	CRCW08051201F
88	9	10UF 6.3V 10% 805	C184–185	AVX	080560106KAT2A
89	3	6.04K 100MW 1% 805	R65,R148–149	DIGI-KEY	311-6.04KCCT-ND
90	7	0.1UF 10V 10% 402	C41,C128–129, C136	AVX	0402ZD104KAT2A
91	5	0.01UF 16V 10% 402	C134,C138,C147, C149,C151	AVX	0402YC103KAT2A

Reference	Quantity	Description	Reference Design	Manufacturer	Part Number
92	8	1000PF 50V 5% 402 CERM	C130,C135,C137, C139,C143,C146,	AVX	04025C102JAT2A
93	2	64.9K 1/10W 1% 805	R67,R87	VISHAY INTERTEC	CRCW08056492F
94	2	210K 1/4W 1% 805	R69,R88	VISHAY INTERTEC	CRCW08052103F
95	1	1A SK12 DO-214AA SCHOTTKY	D3	MCC	SK12
96	21	10PF 50V 5% 805 NPO	C21–25,C27–36, C42–43,C123–126	AVX	08055A100JAT2A
97	1	1K 1/8W 5% 1206	R106	AVX	CR32-102J-T
98	1	100K 1/8W 5% 1206	R73	DALE	CR1206-1003FRT
99	2	22 1/8W 5% 1206	R103–104	DALE	CRCW1206220JR
100	12	270 1/8W 5% 1206	R138–139, R153–154, R177–184	AVX	CR32-271J-T
101	2	RED-SMT LED001 GULL-WING	LED9,LED12	PANASONIC	LN1261C
102	1	GREEN-SMT LED001 GULL-WING	LED10	PANASONIC	LN1361C
103	8	604 1/8W 1% 1206	R127–134	DALE	CRCW12066040F
104	4	1uF 25V 20% A TANT -55+125	CT15–18	PANASONIC	ECS-T1EY105R
105	2	ADG774A QSOP16 QUICKSWITCH-257	U30–31	ANALOG DEV.	ADG774ABRQ

Reference	Quantity	Description	Reference Design	Manufacturer	Part Number
106	1	IDC 3X2 IDC3X2	P2	BERG	54102-T08-03
107	1	IDC 7X2 IDC7X2 HEADER	P5	BERG	54102-T08-07
108	1	IDC 13X2 IDC13X2	P3	BERG	54102-T08-13
109	1	2.5A RESETABLE FUS001	F1	RAYCHEM CORP.	SMD250-2
110	1	3.5MM STEREO_JACK CON001	J6	SHOGYO	SJ-0359AM-5

ADSP-21262 EZ-KIT Lite Schematic

DNP = Do Not Populate

ANALOG DEVICES
20 Cotton Road
Nashua, NH 03063
PH: 1-800-ANALOGD

Title	ADSP-21262 EZ-KIT LITE - TITLE		
Size C	**Board No.** A0174-2002		**Rev** 1.4
Date 11-7-2003_19:25		**Sheet** 1 **of** 12	

These capacitors were placed on the board due to a DSP anomaly. Please refer to the DSP anomaly sheet for more information.

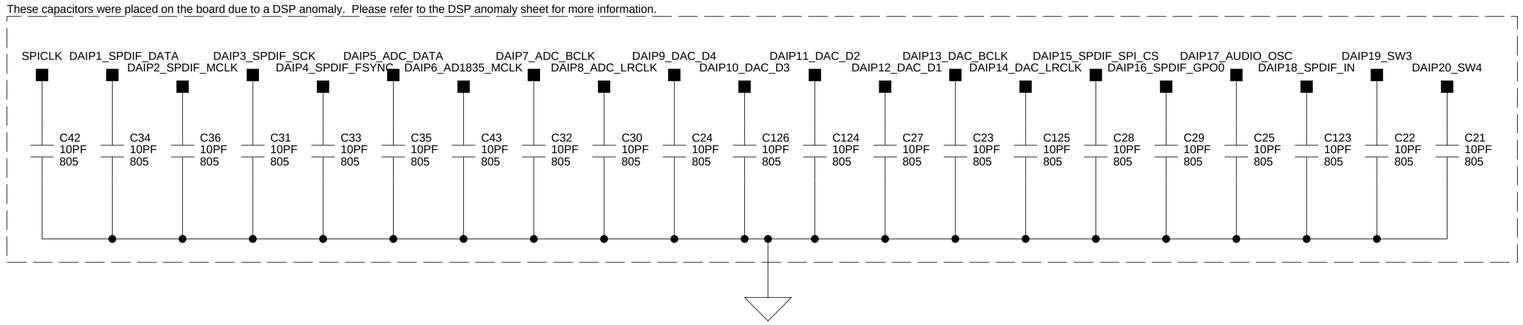

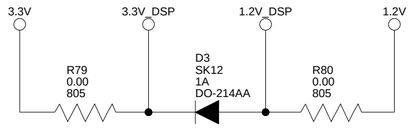

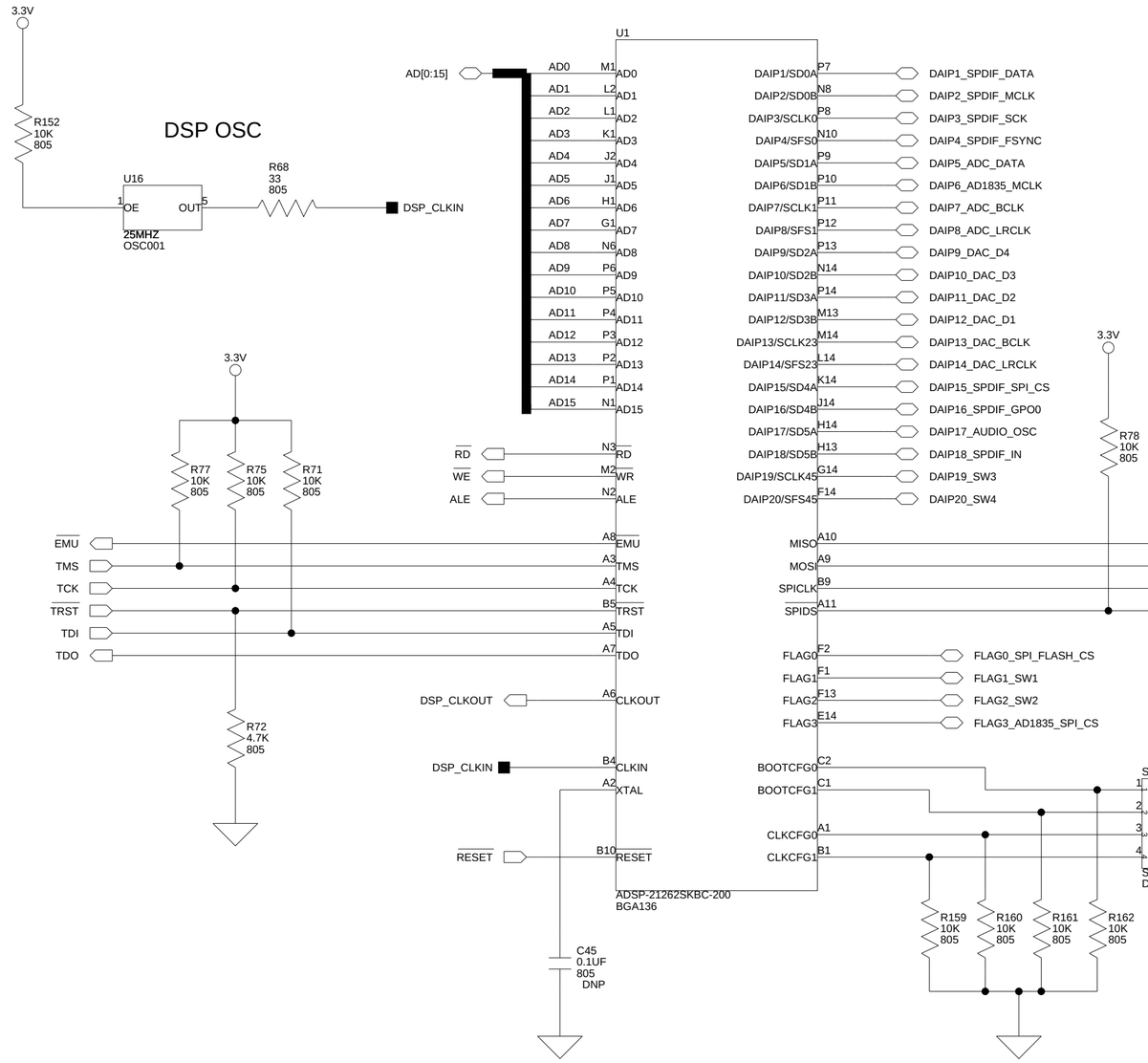

SW10: BOOT/CLOCK RATIO SELECT
(Default: 1=ON, 2=OFF, 3=ON, 4=OFF)

1 BOOTCFG0	2 BOOTCFG1	BOOTMODE
OFF	OFF	SPI SLAVE BOOT
ON	OFF	SPI MASTER BOOT
OFF	ON	PARALLEL PORT BOOT
ON	ON	RESERVED
3 CLKCFG0	**4 CLKCFG1**	**CLOCK RATIO CORE:CLKIN**
OFF	OFF	3:1
ON	OFF	16:1
OFF	ON	8:1
ON	ON	RESERVED

DEFAULT

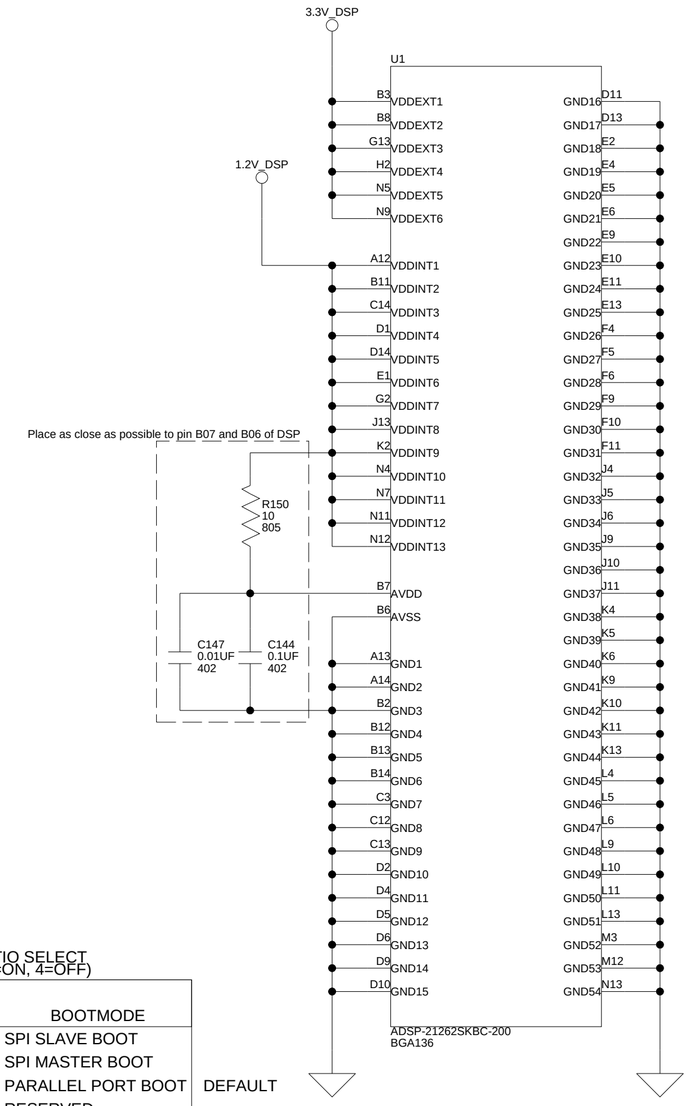

DEFAULT

DNP = Do Not Populate

ANALOG DEVICES
20 Cotton Road
Nashua, NH 03063
PH: 1-800-ANALOGD

Title ADSP-21262 EZ-KIT LITE - DSP

Size	Board No.	Rev
C	A0174-2002	1.4

Date 1-23-2004_12:23 **Sheet** 2 **of** 12

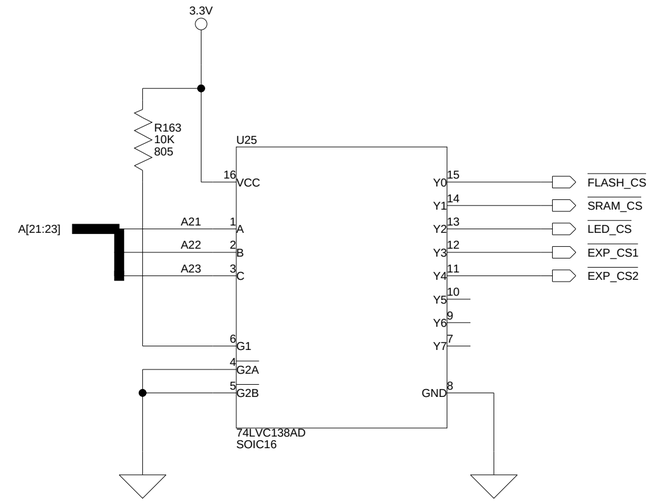

VALID DSP ADDRESS		BANK END	A23	A22	A21	BANK	DEVICE
START	END	ADDRESS					
1A0 0000	X	1FF FFFF	1	-	-	-	NONE
180 0000	X	19F FFFF	1	0	0	Y4	EXPANSION INTERFACE CS 2
160 0000	X	17F FFFF	0	1	1	Y3	EXPANSION INTERFACE CS 1
140 0000	140 0000	15F FFFF	0	1	0	Y2	LEDs
120 0000	127 FFFF	13F FFFF	0	0	1	Y1	SRAM
100 0000	10F FFFF	11F FFFF	0	0	0	Y0	FLASH

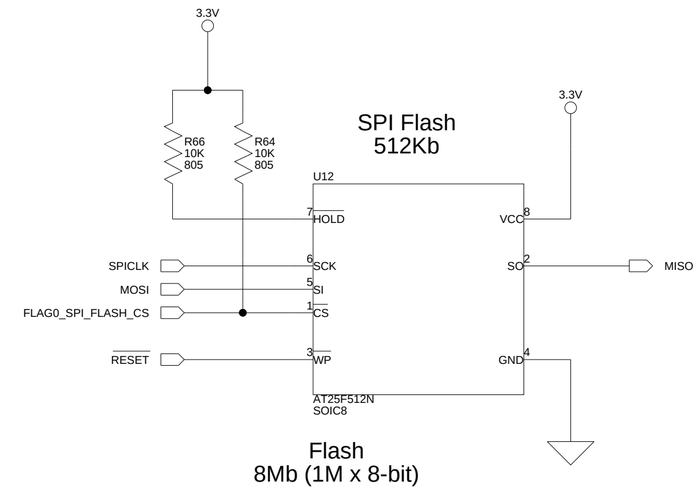

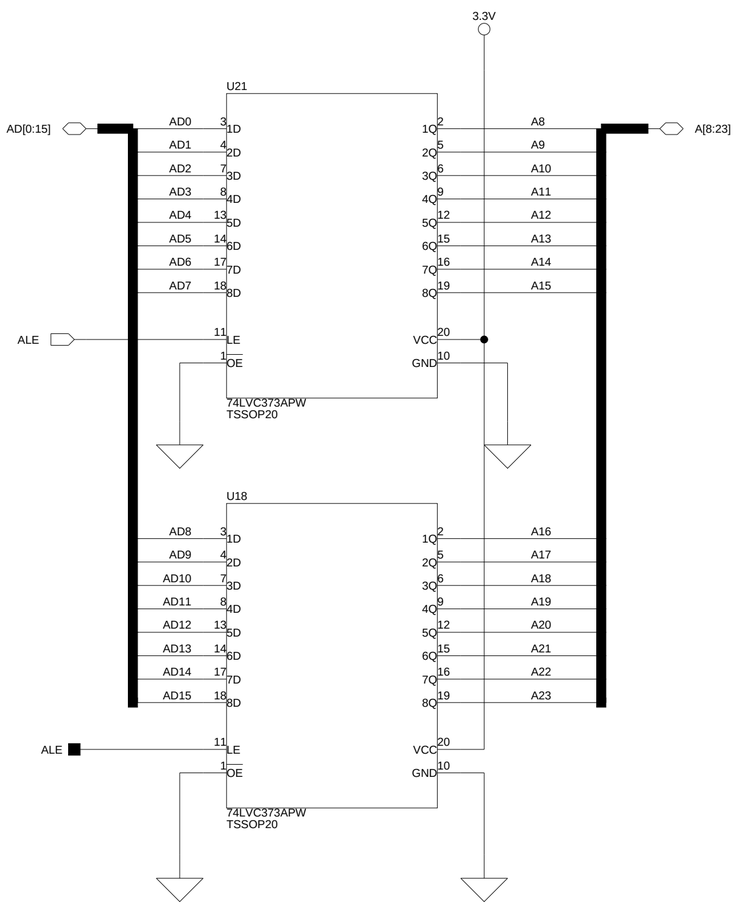

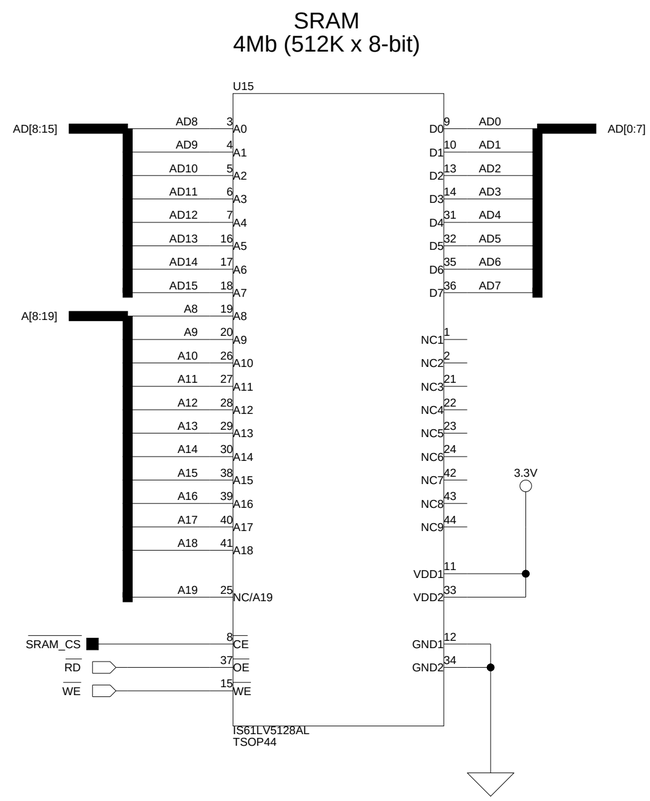

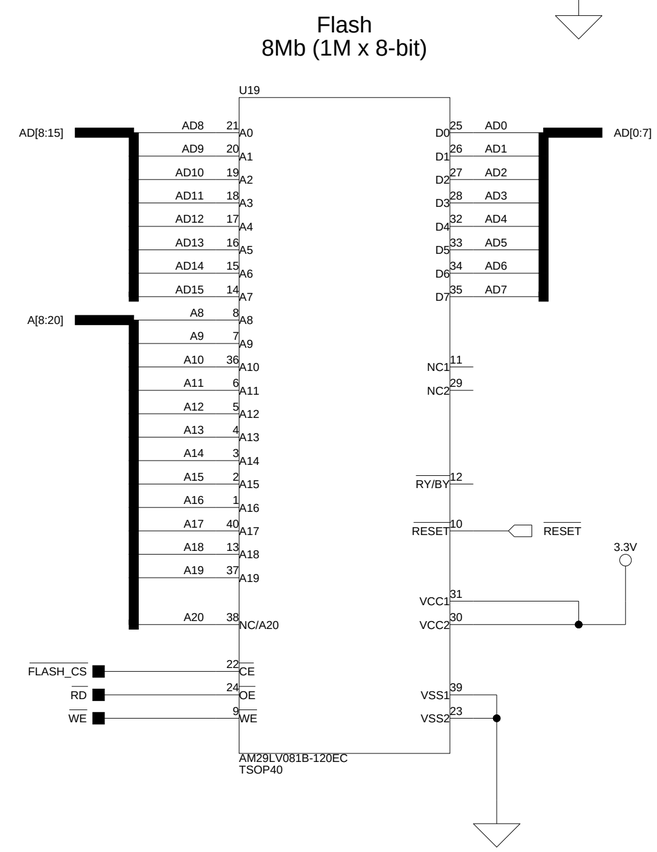

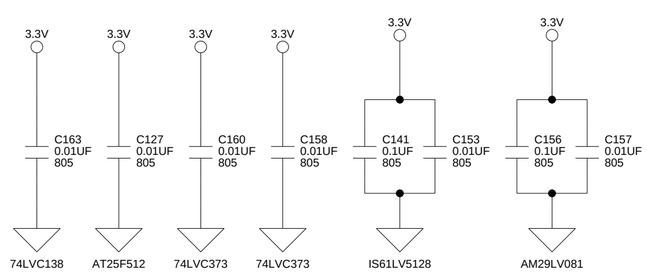

DNP = Do Not Populate

ANALOG DEVICES
20 Cotton Road
Nashua, NH 03063
PH: 1-800-ANALOGD

Title ADSP-21262 EZ-KIT LITE - MEMORY

Size	Board No.	Rev
C	A0174-2002	1.4

Date 1-23-2004_13:10 **Sheet** 3 **of** 12

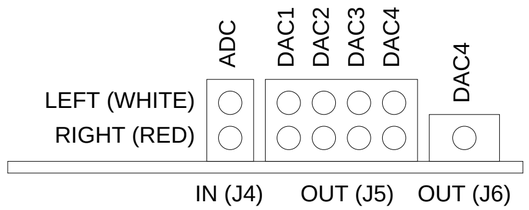

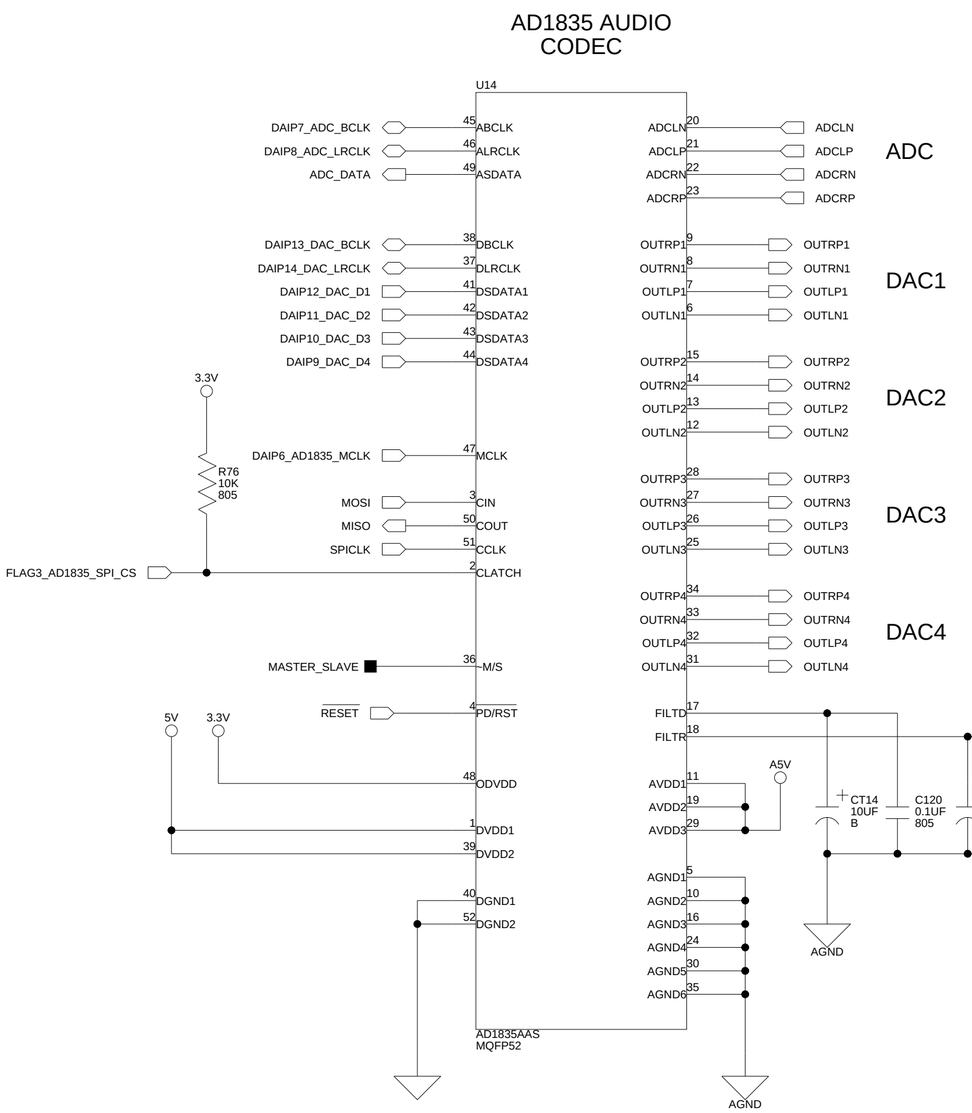

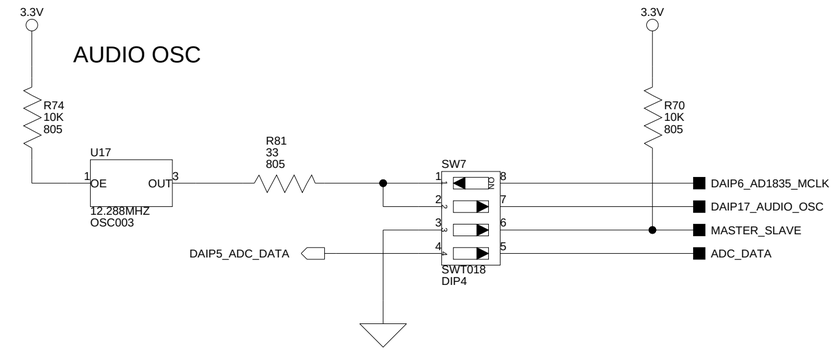

SW7: CODEC SETUP SWITCH
(Default: 1=OFF, 2=ON, 3=ON, 4=ON)

1-2	Connects or disconnects the audio oscillator depending on how the system is setup. See users manual for more information.
3	OFF = AD1835 is SLAVE ON = AD1835 is MASTER
4	Disconnects ADC_DATA signal from driving the corrisponding DAI signal. Useful if using this DAI pin for another purpose.

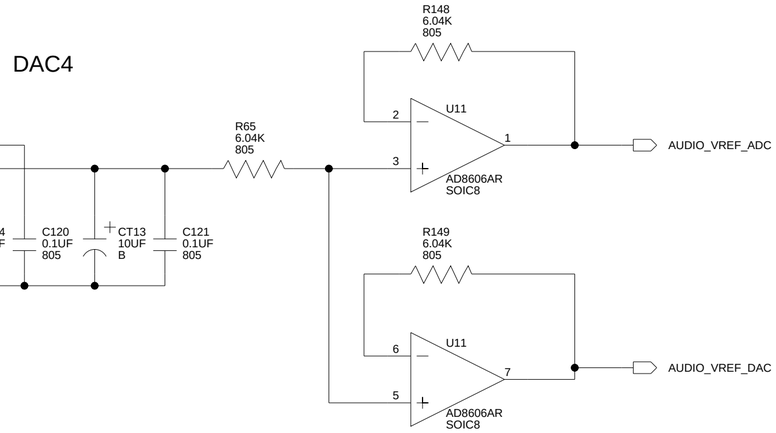

Loopback Test Switch
(Default= All OFF)
For Test Purposes Only

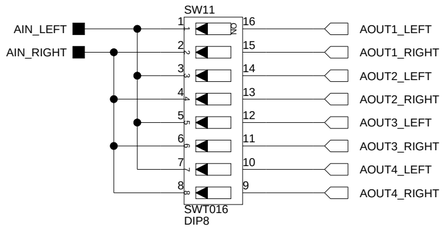

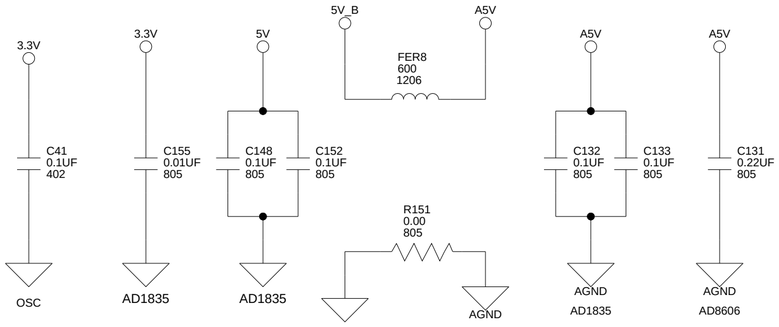

DNP = Do Not Populate

ANALOG DEVICES
20 Cotton Road
Nashua, NH 03063
PH: 1-800-ANALOGD

Title ADSP-21262 EZ-KIT LITE - ANALOG AUDIO

Size	Board No.	Rev
C	A0174-2002	1.4

Date 11-7-2003_18:38 **Sheet** 4 **of** 12

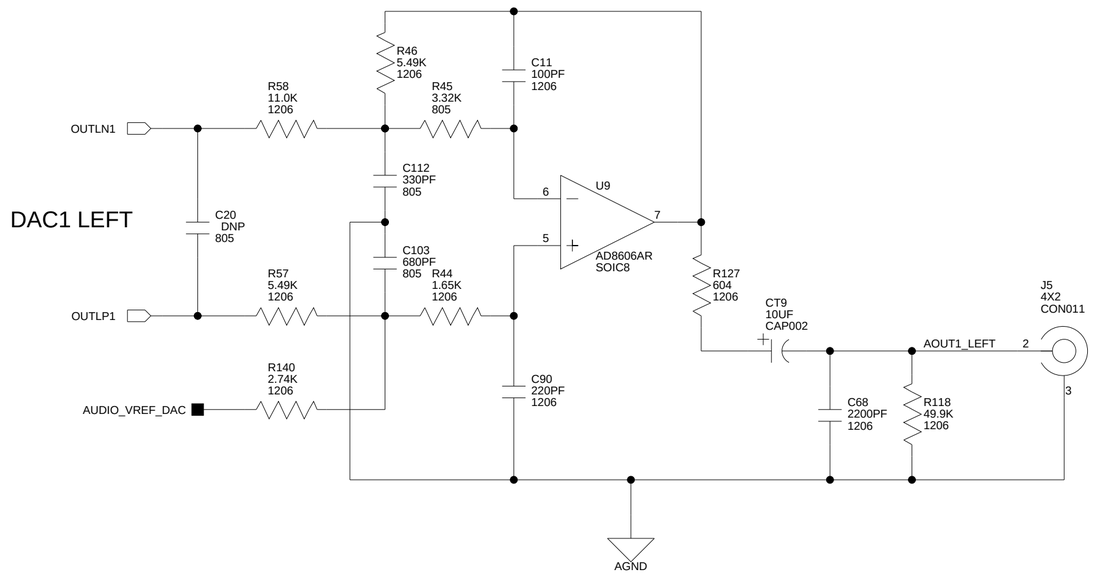

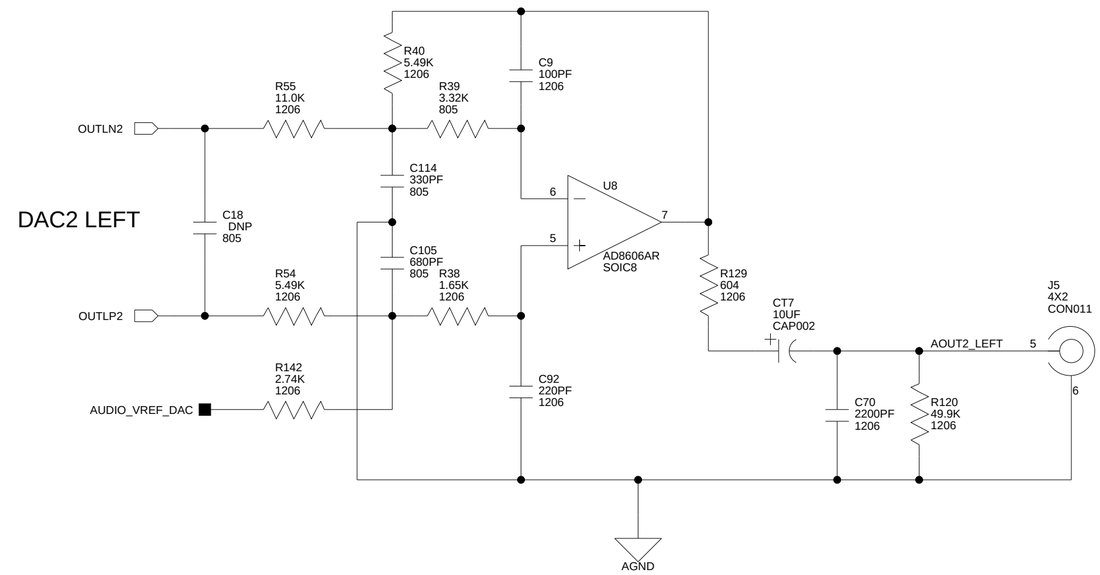

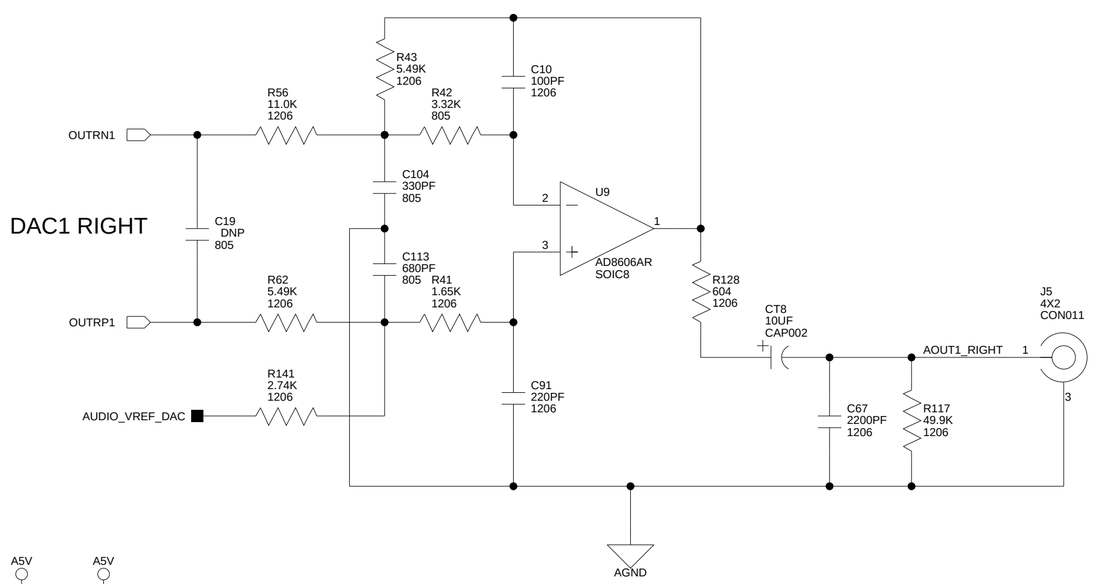

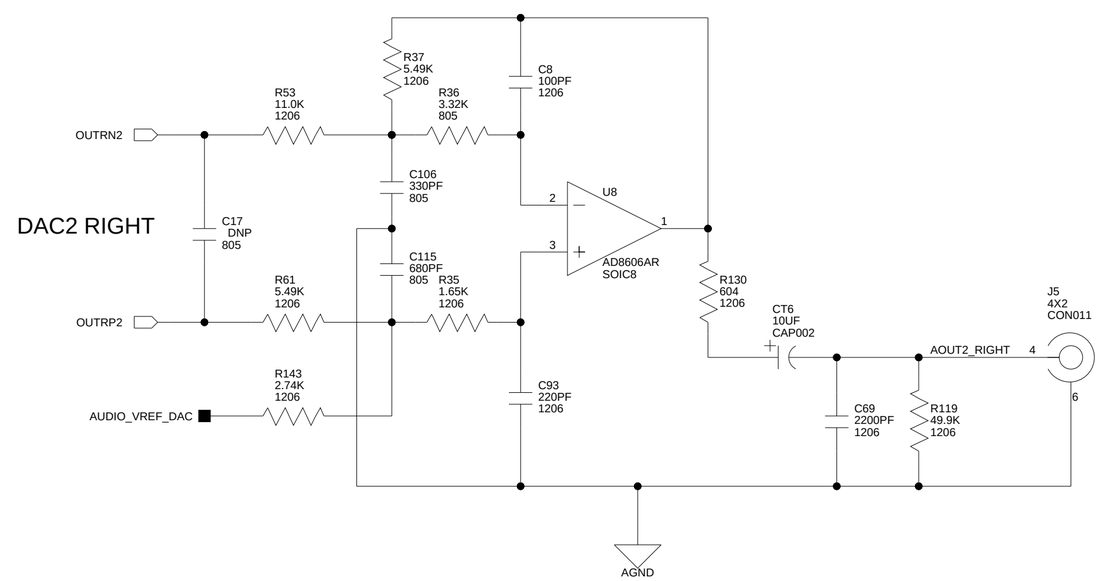

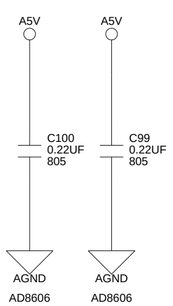

DNP = Do Not Populate

ANALOG DEVICES
20 Cotton Road
Nashua, NH 03063
PH: 1-800-ANALOGD

Title	ADSP-21262 EZ-KIT LITE - AUDIO OUT 1		
Size C	Board No. A0174-2002		Rev 1.4
Date 8-19-2003_22:57		Sheet 5 of 12	

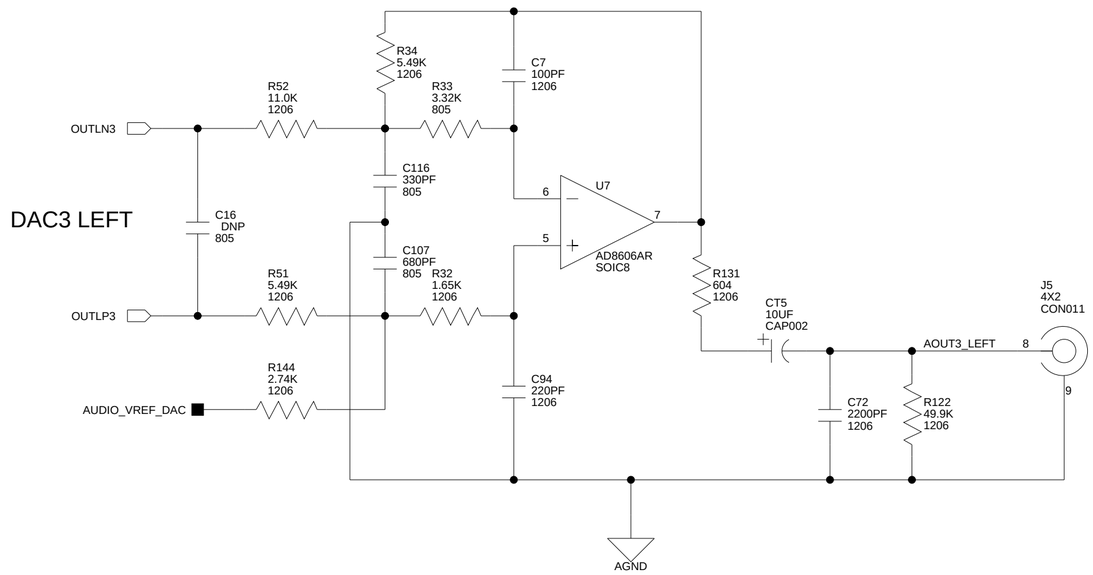

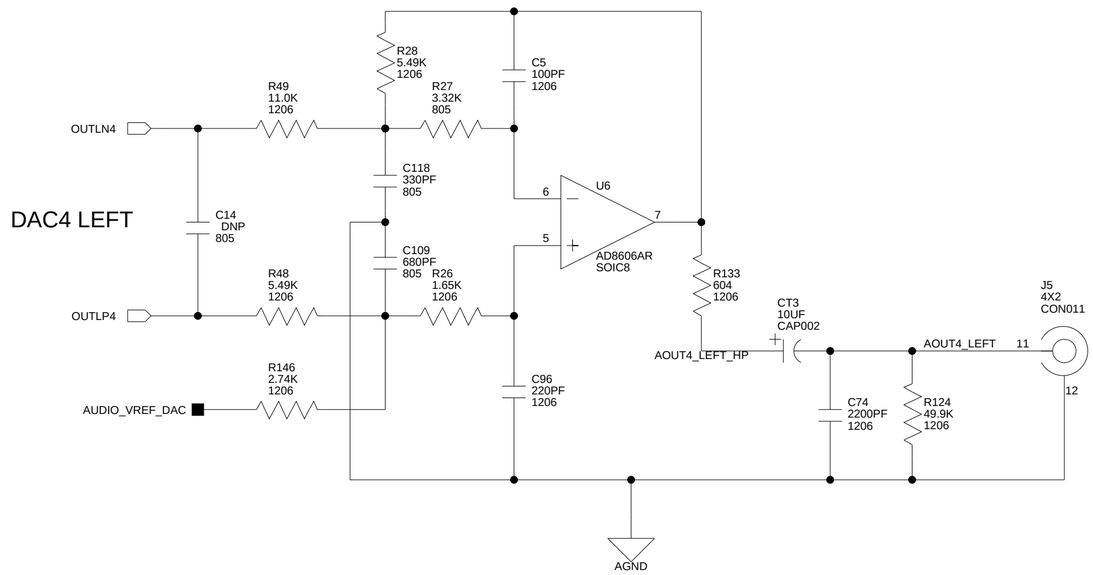

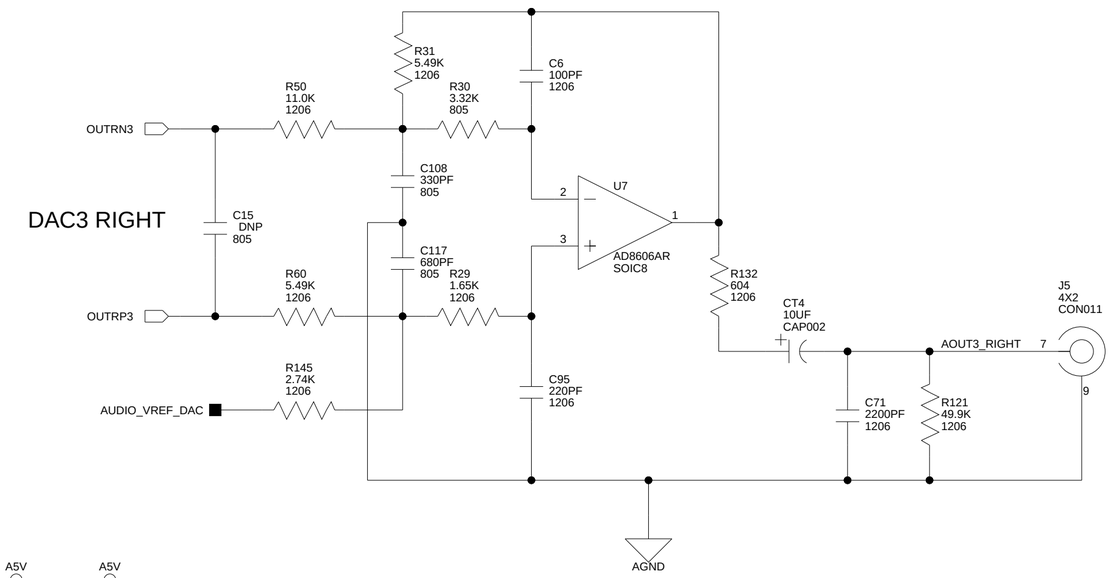

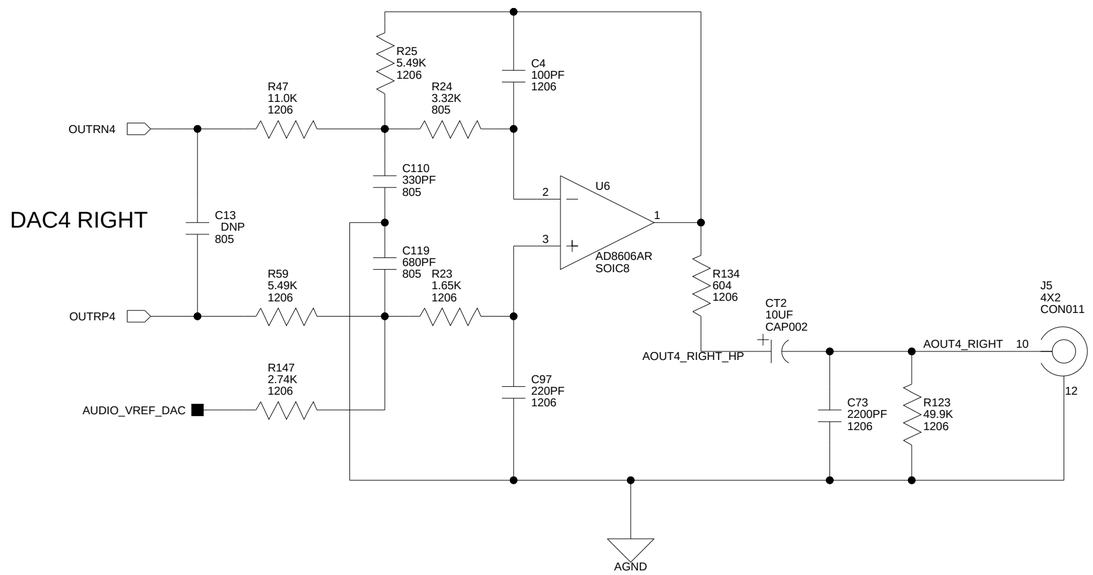

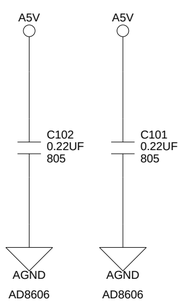

DNP = Do Not Populate

ANALOG DEVICES
20 Cotton Road
Nashua, NH 03063
PH: 1-800-ANALOGD

Title	ADSP-21262 EZ-KIT LITE - AUDIO OUT 2	
Size C	Board No. A0174-2002	Rev 1.4
Date 8-19-2003_22:57	Sheet 6 of 12	

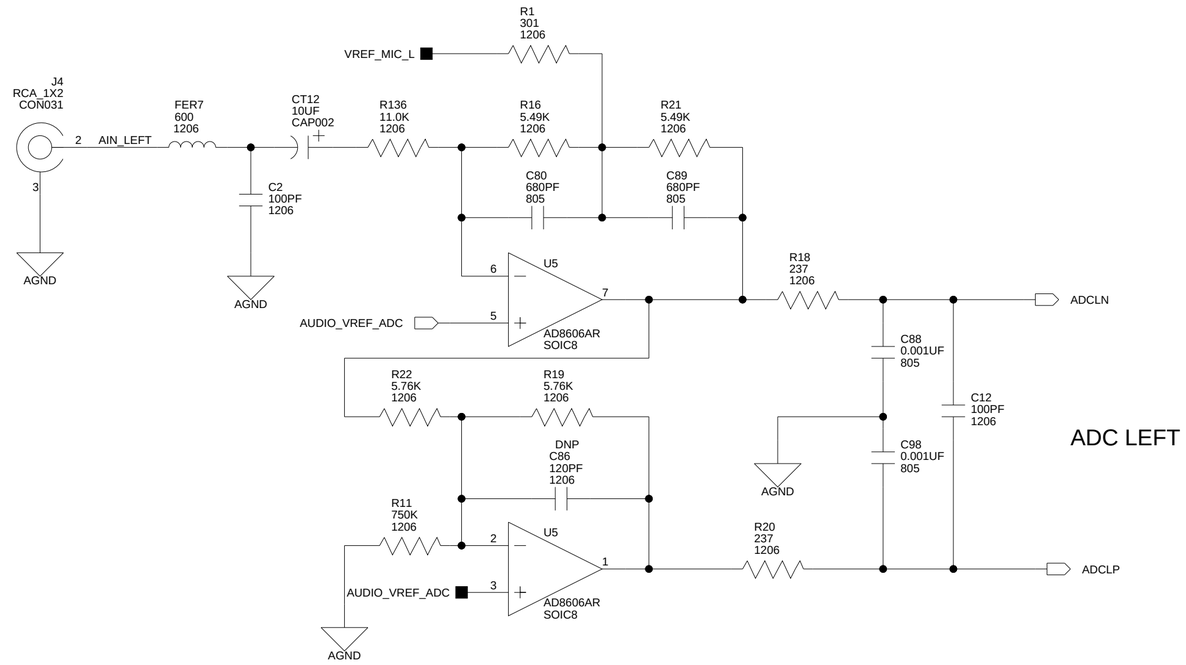

ADC LEFT

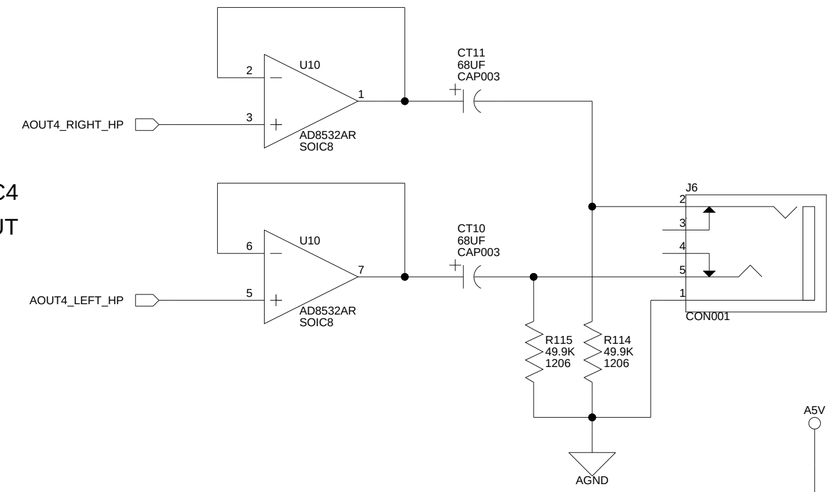

DAC4
HEADPHONE OUT

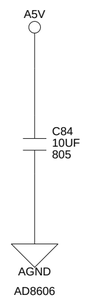

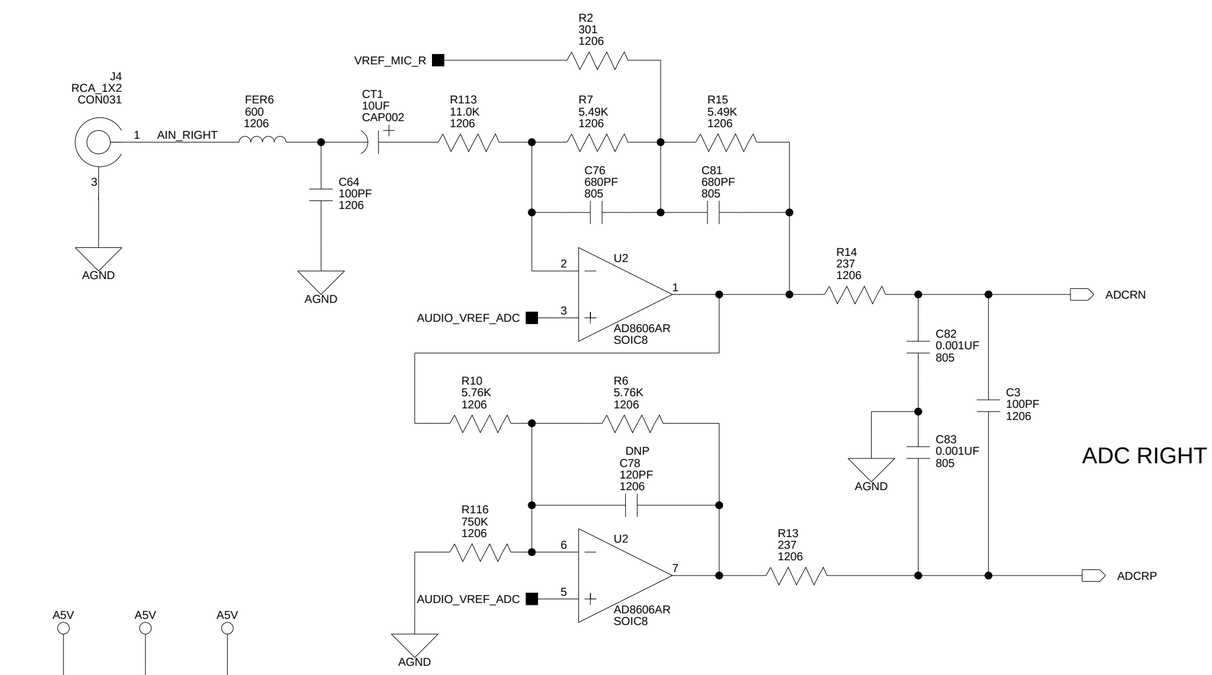

ADC RIGHT

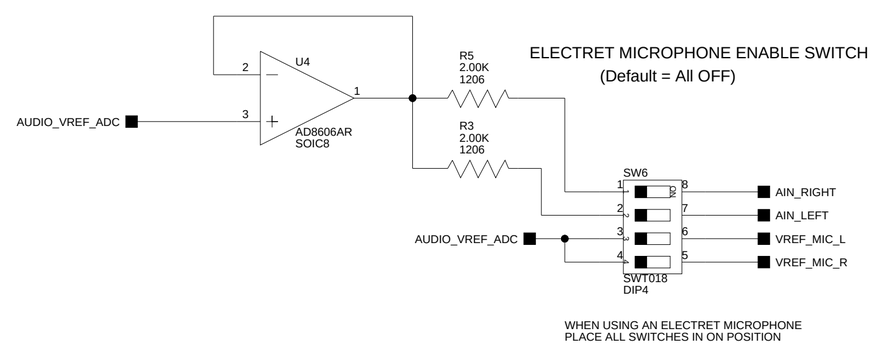

ELECTRET MICROPHONE ENABLE SWITCH
(Default = All OFF)

WHEN USING AN ELECTRET MICROPHONE
PLACE ALL SWITCHES IN ON POSITION

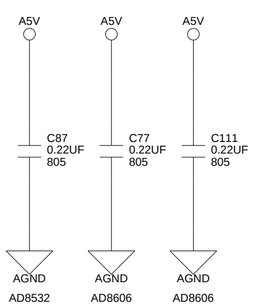

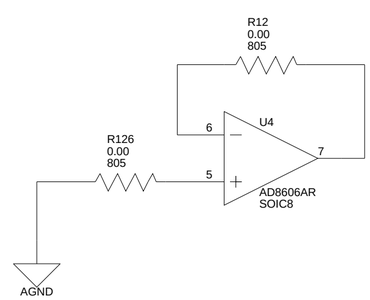

DNP = Do Not Populate

ANALOG DEVICES
20 Cotton Road
Nashua, NH 03063
PH: 1-800-ANALOGD

Title	ADSP-21262 EZ-KIT LITE - HEADPHONE OUT		
Size C	Board No. A0174-2002		Rev 1.4
Date 7-3-2003_17:09		Sheet 7 of 12	

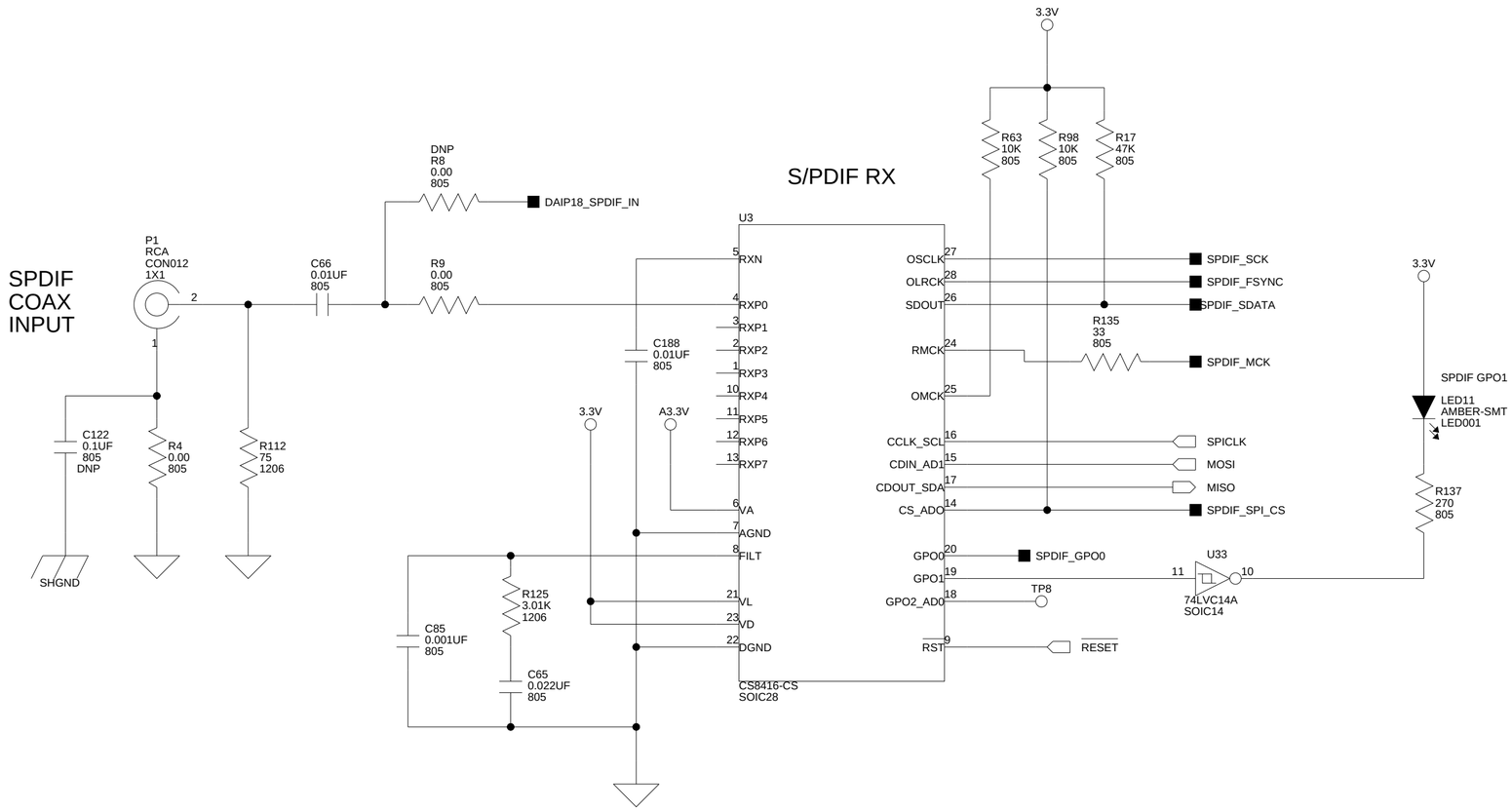

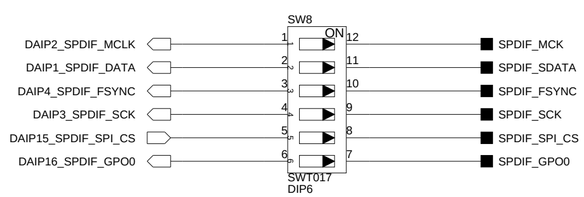

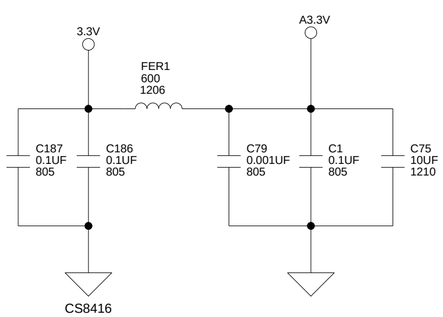

SW8: SPDIF SIGNAL DISABLE
(Default: ALL = ON)

1-6	Used to disconnect signals of the SPDIF inteface from the corrisponding DAI signals. Useful if using DAI signals for another purpose.

DNP = Do Not Populate

ANALOG DEVICES
20 Cotton Road
Nashua, NH 03063
PH: 1-800-ANALOGD

Title ADSP-21262 EZ-KIT LITE - S/PDIF RX

Size	Board No.	Rev
C	A0174-2002	1.4

Date 1-28-2004_11:01 **Sheet** 8 **of** 12

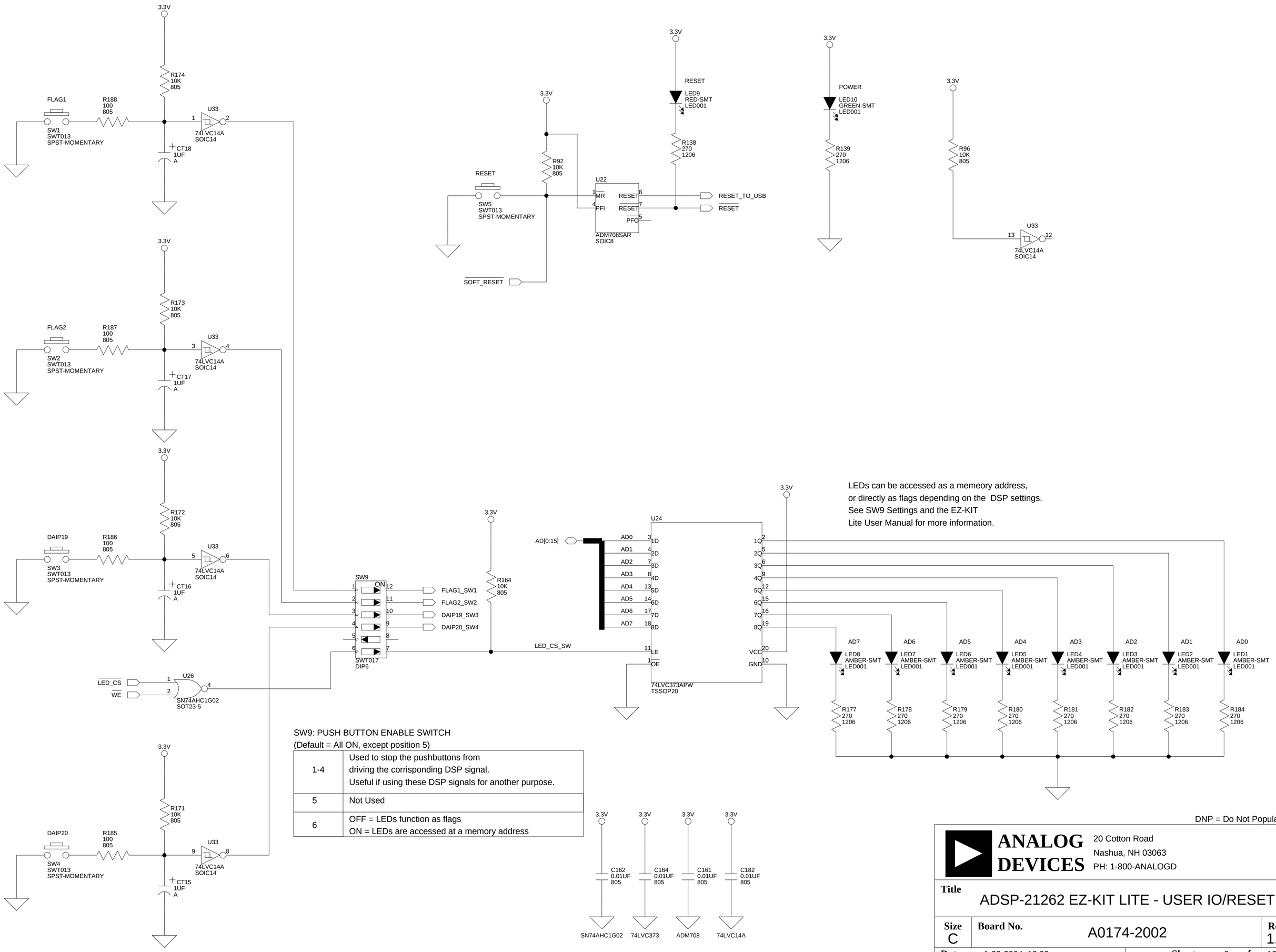

SW9: PUSH BUTTON ENABLE SWITCH
(Default = All ON, except position 5)

1-4	Used to stop the pushbuttons from driving the corrisponding DSP signal. Useful if using these DSP signals for another purpose.
5	Not Used
6	OFF = LEDs function as flags ON = LEDs are accessed at a memory address

DNP = Do Not Populate

ANALOG DEVICES
20 Cotton Road
Nashua, NH 03063
PH: 1-800-ANALOGD

Title: ADSP-21262 EZ-KIT LITE - USER IO/RESET

Size	Board No.	Rev
C	A0174-2002	1.4

Date: 1-23-2004_13:09 Sheet 9 of 12

EXPANSION INTERFACE (TYPE A)

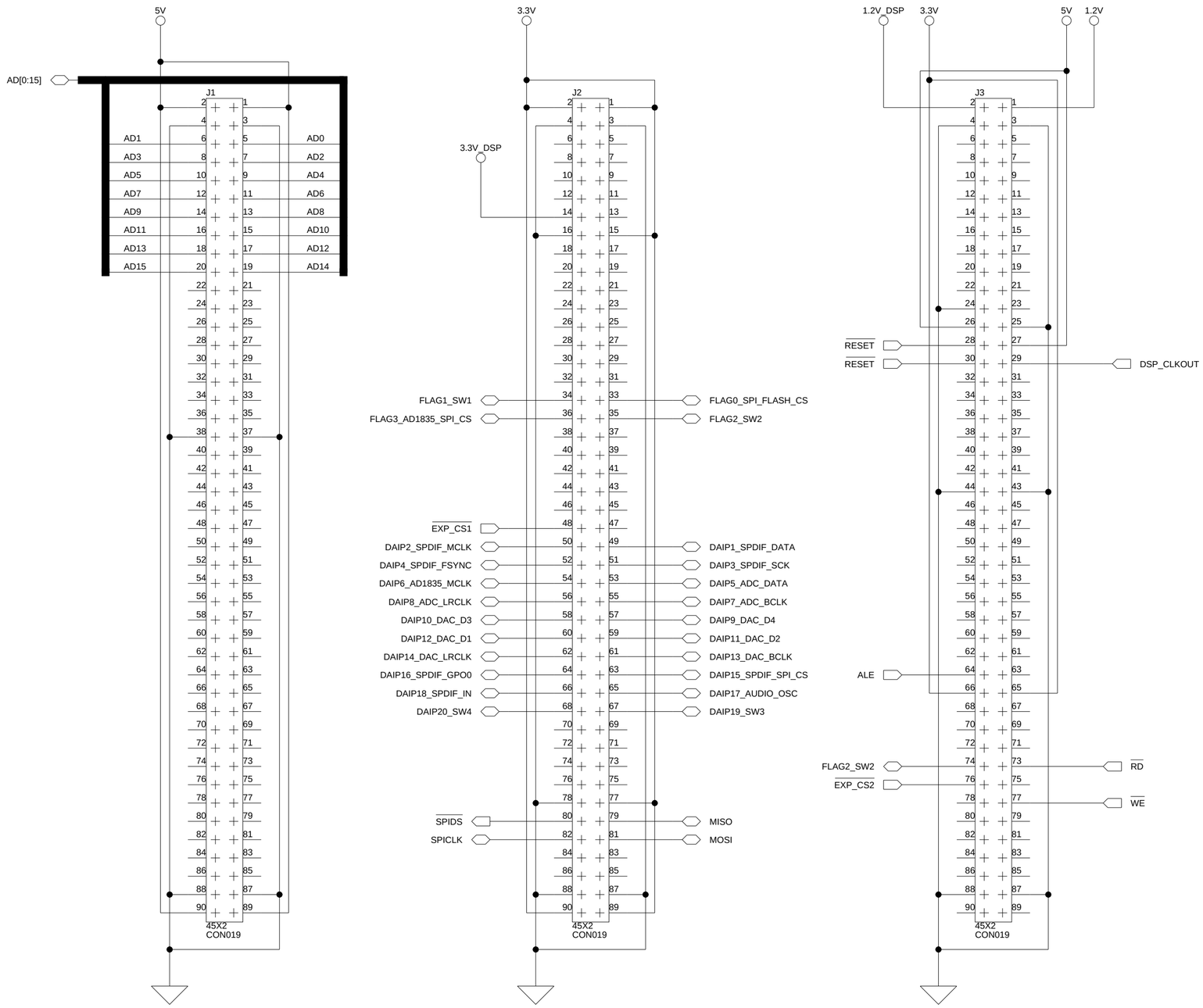

All USB interface circuitry is considered proprietary and has been omitted from this schematic.

When designing your JTAG interface please refer to the Engineer to Engineer Note EE-68 which can be found at http://www.analog.com

JTAG HEADER

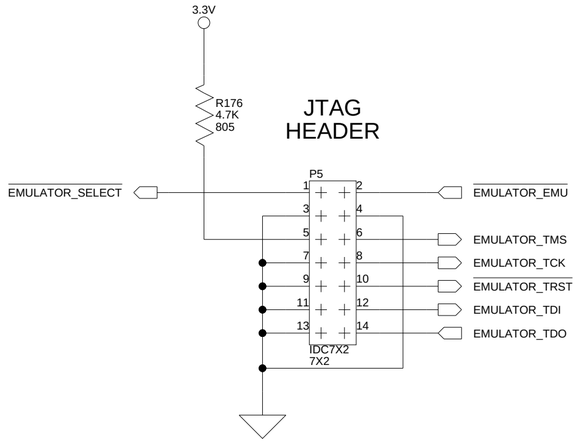

DAI HEADER

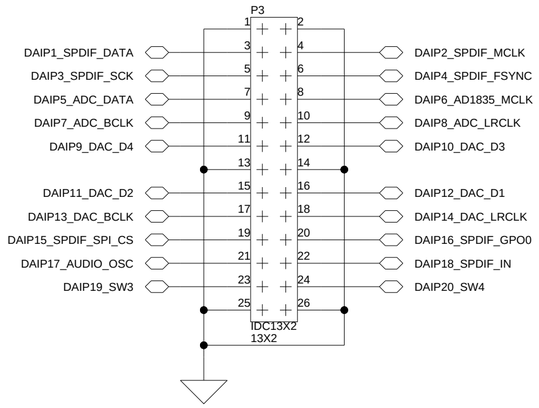

SPI HEADER

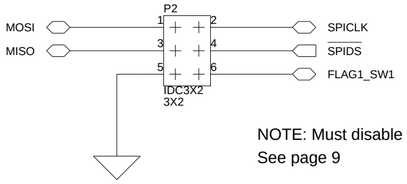

NOTE: Must disable SW1 when using this pin as SPI select.
See page 9

DNP = Do Not Populate

ANALOG DEVICES
20 Cotton Road
Nashua, NH 03063
PH: 1-800-ANALOGD

Title	ADSP-21262 EZ-KIT LITE - CONNECTORS		
Size C	Board No. A0174-2002		Rev 1.4
Date 1-23-2004_12:23		Sheet 10 of 12	

POWER IN

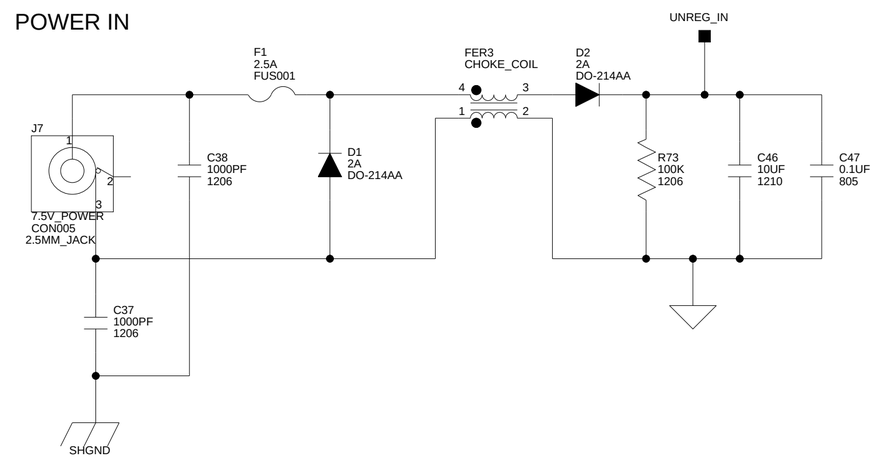

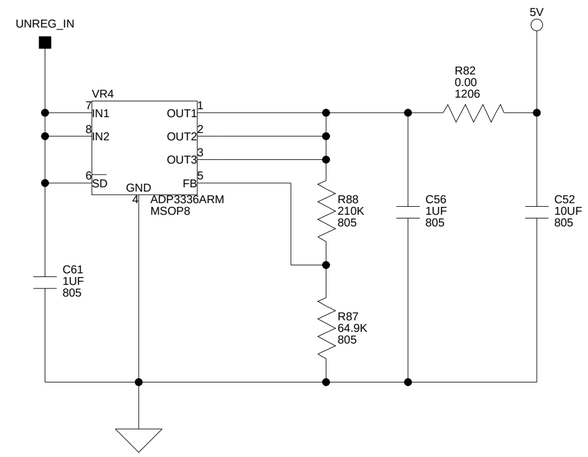

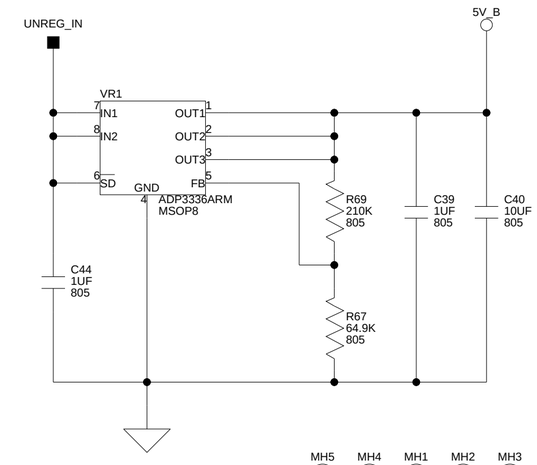

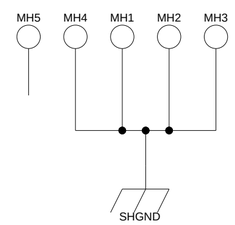

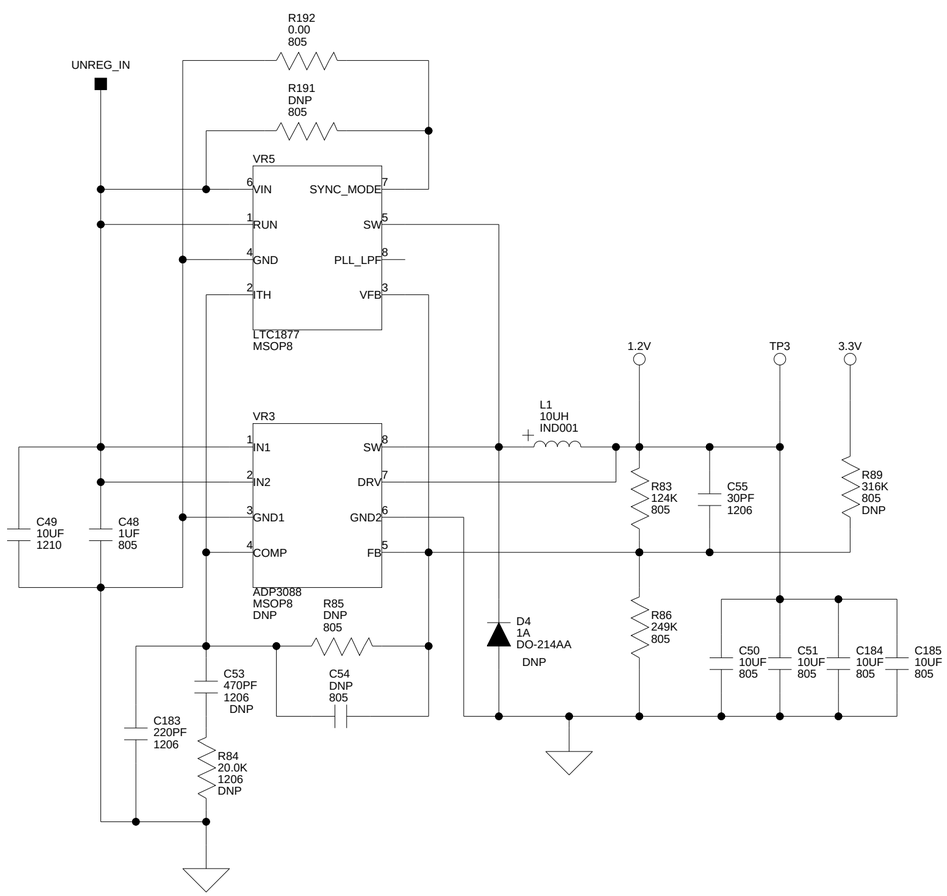

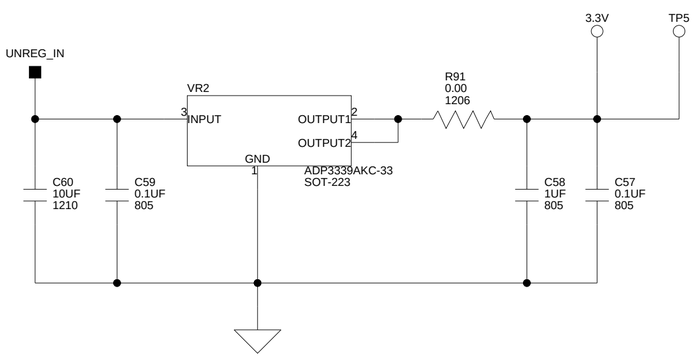

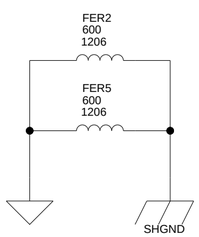

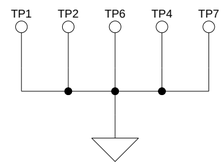

REFERENCE DESIGNATOR	ADP3088 POPULATION OPTION	LTC1877 POPULATION OPTION (DEFAULT)
R89	316K	DNP
VR3	ADP3088	DNP
VR5	DNP	LTC1877
R191	DNP	DNP
R192	DNP	0
D4	POP	DNP
R83	53.6K	124K
R86	221K	249K
C53	470pF	DNP
R84	20K	DNP
C183	10pF	220pF
C55	470pF	30pF

DNP = Do Not Populate

ANALOG DEVICES
20 Cotton Road
Nashua, NH 03063
PH: 1-800-ANALOGD

Title ADSP-21262 EZ-KIT LITE - POWER

Size	Board No.	Rev
C	A0174-2002	1.4

Date 1-23-2004_11:59 **Sheet** 11 **of** 12

I INDEX

T

U

V