One Technology Way • P.O. Box 9106 • Norwood, MA 02062-9106, U.S.A. • Tel: 781.329.4700 • Fax: 781.461.3113 • www.analog.com

Evaluating the AD5422 Single Channel, 16-Bit, Current Source and Voltage Output DAC, HART Connectivity

FEATURES

Full-featured evaluation board for the AD5422
On-board reference
Link options
Direct hook-up to USB port of PC
PC software for control

EVALUATION BOARD DESCRIPTION

The EVAL-AD5422 is a full-featured evaluation board that is designed to allow the user to easily evaluate all features of the 16-bit AD5422 current source and voltage output digital-to-analog converter (DAC). All of the AD5422 pins are accessible at on-board connectors for external connection. The board can be controlled by two means, via the on-board connector (J8) or via the USB port of a Windows® 2000-, NT®-, XP®-based PC using the AD5422 evaluation software. The default setup is for control via the USB port.

Two separate packages exist for the AD5422 (24-lead TSSOP and 40-lead LFCSP); therefore, two corresponding evaluation boards are available.

DEVICE DESCRIPTION

The AD5422 is a low cost, precision, fully integrated 16-bit converter, offering a programmable current source and programmable voltage output designed to meet the requirements of industrial process control applications. The output current range is programmable to 4 mA to 20 mA, 0 mA to 20 mA, or an overrange function of 0 mA to 24 mA. The voltage output is provided from a separate pin that can be configured to provide 0 V to 5 V, 0 V to 10 V, ±5 V or ±10 V output ranges; an overrange of 10% is available for all ranges. Analog outputs are short- and open-circuit protected and can drive capacitive loads of 1 µF. The device is specified to operate with a power supply range from 10.8 V to 40 V. The output loop compliance is 0 V to AV_{DD} – 2.5 V.

Complete specifications for the AD5422 are available in the AD5422 data sheet and should be consulted in conjunction with this document when using the evaluation board.

FUNCTIONAL BLOCK DIAGRAM

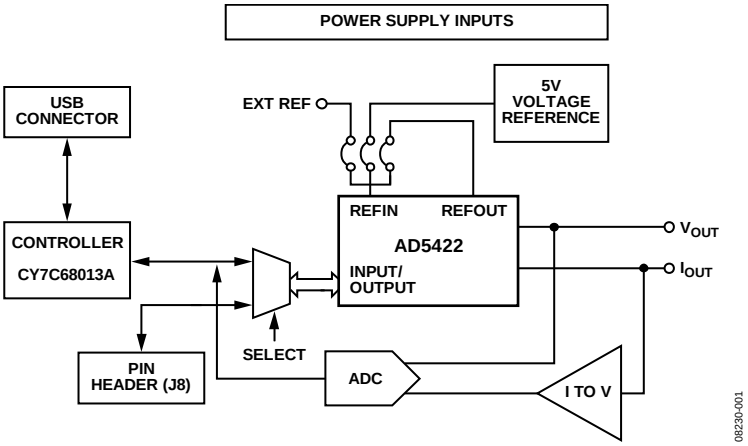

Figure 1.

TABLE OF CONTENTS

REVISION HISTORY

10/13—Rev. B to Rev. C

Change to Figure 6 ... 9
Change to Figure 8 ... 11
Changes to C3, Supplier/Number Column, Table 5 ... 14

3/13—Rev. A to Rev. B

Change to Control Register Section and Added Figure 4; Renumbered Sequentially ... 7

7/12—Rev. 0 to Rev. A

Document Title Changed from EVAL-AD5422 to UG-442 ... Universal
Changes to Evaluation Board Description Section ... 1
Changes to Figure 3 ... 6
Changes to Figure 4 ... 8
Changes to Figure 5 ... 9
Inserted Figure 6; Renumbered Sequentially ... 10
Inserted Figure 7 ... 11
Changes to Figure 8 to Figure 10 ... 12
Inserted Figure 11 to Figure 13 ... 13

4/09—Revision 0: Initial Version

EVALUATION BOARD HARDWARE

POWER SUPPLIES

The following external supplies must be provided:

- 5 V between the 5 V and 0 V inputs for the digital supply of the AD5422 and digital circuitry. Alternatively, place LK6 in Position A to power the digital circuitry from the USB port (default).
- 10.8 V to 40 V between the AV_{DD} and GND inputs for the analog supply of the AD5422.
- 0 V to −26.4 V between the AV_{SS} and GND inputs for the negative analog supply of the AD5422. (This is only required if a bipolar output voltage range is programmed; otherwise, the negative supply of the AD5422 can be connected to GND by placing LK4 in Position A.)
- 10.8 V to 16.5 V between the V+ and GND inputs for the analog supply of the AD7321 (on-board analog-to-digital converter [ADC]) and ADR435 (on-board voltage reference). If the analog supply connected to the AV_{DD} input is less than 16.5 V, the AD7321 and ADR435 can be powered from this by placing LK9 in Position A, and the V+ input can be left unconnected.
- 0 V to −16.5 V between the V− and GND inputs for the negative analog supply of the AD7321 (on-board ADC). If the negative analog supply connected to the AV_{SS} input is less than (magnitude) −16.5 V, the AD7321 can be powered from this by placing LK16 in Position A, and the V− input can be left unconnected.

The analog and digital planes are connected at one location, close to the AD5422. It is recommended not to connect GND and DGND elsewhere in the system to avoid ground loop problems.

Each supply is decoupled to the relevant ground plane with 10 µF and 0.1 µF capacitors. Each device supply pin is again decoupled with a 10 µF and 0.1 µF capacitor pair to the relevant ground plane.

Excessive Power Supply

If a power supply in excess of 16.5 V is connected to the AV_{DD} input, LK9 must be in Position B to prevent potential damage to the 5 V voltage reference and to the ADC (see U2 and U6, respectively, in Figure 6). However, if a power supply in excess of −16.5 V is to be connected to the AV_{SS} input, LK16 must be in Position B to prevent potential damage to the ADC.

LINK OPTIONS

The position of LK7 configures the board for either PC control via the USB port (default setup) or for control by an external source via J8. Set the link options on the evaluation board for the required operating setup before using the board. The functions of the link options are described in Table 4.

Default Link Option Setup

The default setup is for control by the PC via the USB port. The default link options are listed in Table 1.

Table 1. Link and Switch Options for PC Control

Link No.	Option
LK1	A
LK2	A
LK3	Inserted
LK4	B
LK5	B
LK6	A
LK7	A
LK8	A
LK9	A
LK10	Inserted
LK11	Inserted
LK12	Inserted
LK13	Inserted
LK14	Inserted
LK15	C
LK16	A
LK17	Inserted
LK18	Inserted

Connector J8 Pin Descriptions

Table 2. Connector J8 Pin Configuration[1]

2	4	6	8	10
1	3	5	7	9

[1] LK7 must be in Position B to enable the use of J8.

Table 3. Connector J8 Pin Descriptions

Connector J8 Pin No.	Function
1	SDO
2	CLEAR SELECT
3	DGND
4	CLEAR
5	DGND
6	$\overline{\text{FAULT}}$
7	SDIN
8	DGND
9	SCLK
10	LATCH

Table 4. Link Options

Link No.	Description
LK1	This link selects the state of the CLEAR SELECT pin (when the evaluation board is configured for external control). Position A ties the CLEAR SELECT pin to 0 V. Position B ties the CLEAR SELECT pin to DV_{CC}.
LK2	This link selects the state of the CLEAR pin (when the evaluation board is configured for external control). Position A ties the CLEAR pin to 0 V. Position B ties the CLEAR pin to DV_{CC}.
LK3	This link selects the state of the DV_{CC} SELECT pin. When inserted, the DV_{CC} SELECT pin is tied to 0 V, disabling the internal supply; an external supply must be connected to the DV_{CC} pin via LK17. When removed, the DV_{CC} SELECT pin is unconnected, enabling the internal supply. Removing LK3 eliminates the need for an external digital supply; therefore, LK17 can also be removed.
LK4	This link selects the negative supply voltage for AV_{SS}. Position A selects 0 V as the negative supply voltage (unipolar voltage output operation). Position B selects the AV_{SS} connection of J2 as the negative supply voltage (bipolar voltage output operation).
LK5	This link selects how the I_{OUT} current loop return is connected to ground on the evaluation board. Position A connects the I_{OUT} current loop return directly to ground. Position B connects the I_{OUT} current loop return input to GND through a 51 Ω resistor. The high side of the resistor is connected to the $V_{IN}1$ input of the on-board ADC (AD7321), allowing readback to the PC of the output current.
LK6	This link selects the 5 V power supply source for the digital circuitry. Position A selects the USB port as the 5 V digital circuitry power supply source. Position B selects J7 as the 5 V digital circuitry power supply source.
LK7	This link selects whether the AD5422 evaluation board is controlled by the PC via the USB port or by an external source via J8. Position A selects the evaluation board to be controlled by the PC via the USB port. Position B selects the evaluation board to be controlled by an external source via J8.
LK8	This link selects the digital supply voltage value for the AD5422 and the on-board ADC (U6). Position A selects 5 V as the supply value. Position B selects 3.3 V as the supply value.
LK9	This link selects the positive power supply source for U2 and U6. Position A selects the AV_{DD} input as the positive power supply source (use only if the power supply applied to AV_{DD} is less than 16.5 V). Position B selects the V+ input as the positive power supply source (use if the power supply applied to AV_{DD} input is greater than 16.5 V). A power supply voltage of 10.8 V to 16.5 V can be applied to V+.
LK10	This link is used to enable/disable the external boost transistor. When this link is inserted, the external boost transistor is disabled. When this link is removed, the external boost transistor is enabled.
LK11	This link connects the $-V_{SENSE}$ input to ground. When this link is inserted, the $-V_{SENSE}$ input is connected directly to ground. When this link is removed, the $-V_{SENSE}$ input is left floating and should be connected to the low side of the load resistance external to the evaluation board.
LK12	This link connects the $+V_{SENSE}$ input to V_{OUT}. When this link is inserted, the $+V_{SENSE}$ input is connected directly to the V_{OUT} pin. When this link is removed, the $+V_{SENSE}$ input is connected to V_{OUT} through a 47 kΩ resistance (to prevent the integrated voltage amplifier loop from opening).
LK13	This link connects the I_{OUT} connector directly to the GND connector. When this link is inserted, the I_{OUT} connector is connected directly to the GND connector. When this link is removed, the I_{OUT} connector is disconnected from the GND connector (an external load must be connected).
LK14	This link connects the V_{OUT} output of the AD5422 to the $V_{IN}0$ input of the on-board ADC (AD7321). When this link is inserted, the voltage at the V_{OUT} pin can be read back to the PC. When this link is removed, the voltage at the V_{OUT} pin is disconnected from the on-board ADC input.

Link No.	Description
LK15	This link selects the voltage reference source. Position A selects the internal voltage reference of the AD5422 as the voltage reference source. Position B selects an external source that can be applied at Connector J3. Position C selects the on-board ADR435 as the voltage reference source.
LK16	This link selects the negative power supply source for U6. Position A selects the AV_{SS} input as the negative power supply source (use only if the power supply applied to AV_{SS} input is less (in magnitude) than −16.5 V). Position B selects the V− input as the negative power supply source (use only if the power supply applied to AV_{SS} input is greater (in magnitude) than −16.5 V).
LK17	This link connects the DV_{CC} pin of the AD5422 to the on-board digital power supply. When this link is inserted, the DV_{CC} pin of the AD5422 is connected to the on-board digital power supply (LK3 must be inserted to disable the AD5422 internal digital power supply). When this link is removed, the DV_{CC} pin of the AD5422 is disconnected from the on-board digital power supply (LK3 should be removed to enable the AD5420 internal digital power supply).
LK18	This link connects the AV_{DD} pin of the AD5422 to the power supply applied at the AV_{DD} input connector, J2 (LK18 must be inserted for operation of the AD5422).

EVALUATION BOARD SOFTWARE

SOFTWARE INSTALLATION

The AD5422 evaluation kit includes self-installing software on a CD. The software is compatible with Windows 2000/NT/XP. If the setup file does not run automatically, run the **setup.exe** file from the CD.

To install the evaluation software, do the following:

1. Install the evaluation software before connecting the evaluation board to the USB port of the PC to ensure that the evaluation board is correctly recognized when connected to the PC.
2. After installation from the CD is complete, power up the AD5422 evaluation board as described in the Power Supplies section.
3. Connect the board to the USB port of the PC using the supplied cable.
4. When the evaluation board is detected, proceed through any dialog boxes that appear. This finishes the installation.

SOFTWARE OPERATION

To launch the software, complete the following steps:

1. From the **Start** menu, select **Analog Devices – AD5422/AD5422 Evaluation Software.** The main window of the software then displays (see Figure 3).
2. If the evaluation board is not connected to the USB port when the software is launched, a connectivity error is displayed (see Figure 2). Simply connect the evaluation board to the USB port of the PC and click **Retry.**

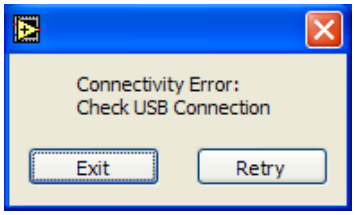

Figure 2. Connectivity Error Alert

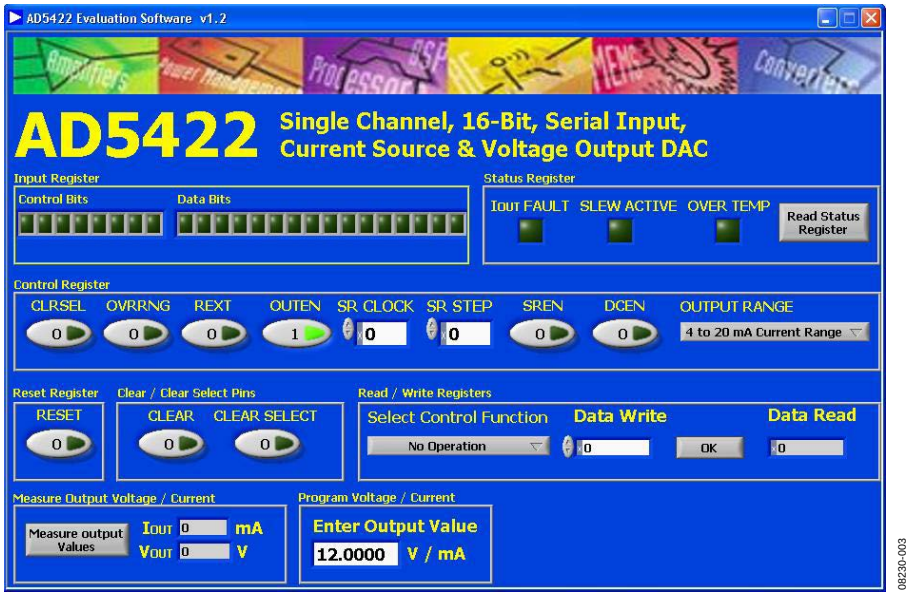

Figure 3. Main Window

The main window is divided into eight sections: **Input Register**, **Status Register**, **Control Register**, **Reset Register**, **Clear/Clear Select Pins**, **Read/Write Registers**, **Measure Output Voltage/Current**, and **Program Voltage/Current.**

Input Register

The **Input Register** section displays the contents of the input register. The 24-bit display is updated each time a read or a write operation is requested via the main window controls. It allows users to associate the value written to the AD5422 with the various programmable functions.

Status Register

The **Status Register** section displays the states of the three bits of the read-only status register. To read the register, click the **Read Status Register** button.

Control Register

The **Control Register** section facilitates programming of the control register on an individual bit basis. To change the value for a bit, click the relevant button. Each button also displays the current state of the bit. You can also enter code in the **SR CLOCK** and **SR STEP** text boxes and select an output range from the **OUTPUT RANGE** drop-down box.

When using an external current setting resistor, it is recommended to only set REXT when also setting the OUTEN bit. Alternately, REXT can be set before the OUTEN bit is set, but the range must be changed on the write in which the output is enabled. The Read/Write Registers section should be used for these commands (see Figure 4).

Reset Register

The sole function of the **Reset Register** section is to allow the AD5422 to be reset to its power-on state. To change the value of the reset bit, click the **RESET** button.

Clear Pin

In the **Clear/Clear Select Pins** section, you can change the state of the CLEAR pin by clicking the **CLEAR** button. Likewise, you can change the state of the CLEAR SELECT pin by clicking the **CLEAR SELECT** button.

Read/Write Registers

In the **Read/Write Registers** section, you can read from and write to all registers in the AD5422. To select a register and request a read or write, click the **Select Control Function** drop-down box. Then, to write data to the register, select the desired data from the **Data Write** drop-down box and then click **OK**. Register data is updated and displayed for you to read in the **Data Read** text box each time you click **OK**.

Measure Output Voltage/Current

To display the programmed output current in the **Measure Output Current** section, click the **Measure output Current** button. The output current is measured using the on-board ADC and is displayed in milliamperes in the V_{OUT} or I_{OUT} box. The output current is measured with an accuracy of approximately 1% and is therefore not intended as precise, but rather is an approximate feedback of the programmed value.

Program Current

To program a voltage or current output value, enter the value in either volts or milliamperes (mA) in the **Enter Value** text box of the **Program Voltage/Current** section, and press **Enter**. The output must first be enabled, and the output range must be selected via the **Control Register** section.

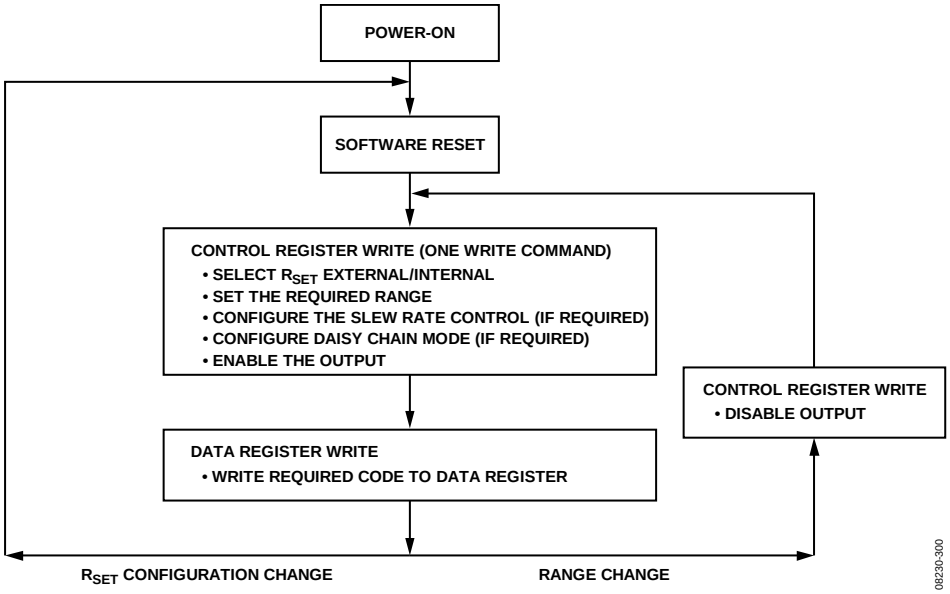

Figure 4. Programming Sequence to Write/Enable the Output Correctly

EVALUATION BOARD SCHEMATICS AND ARTWORK

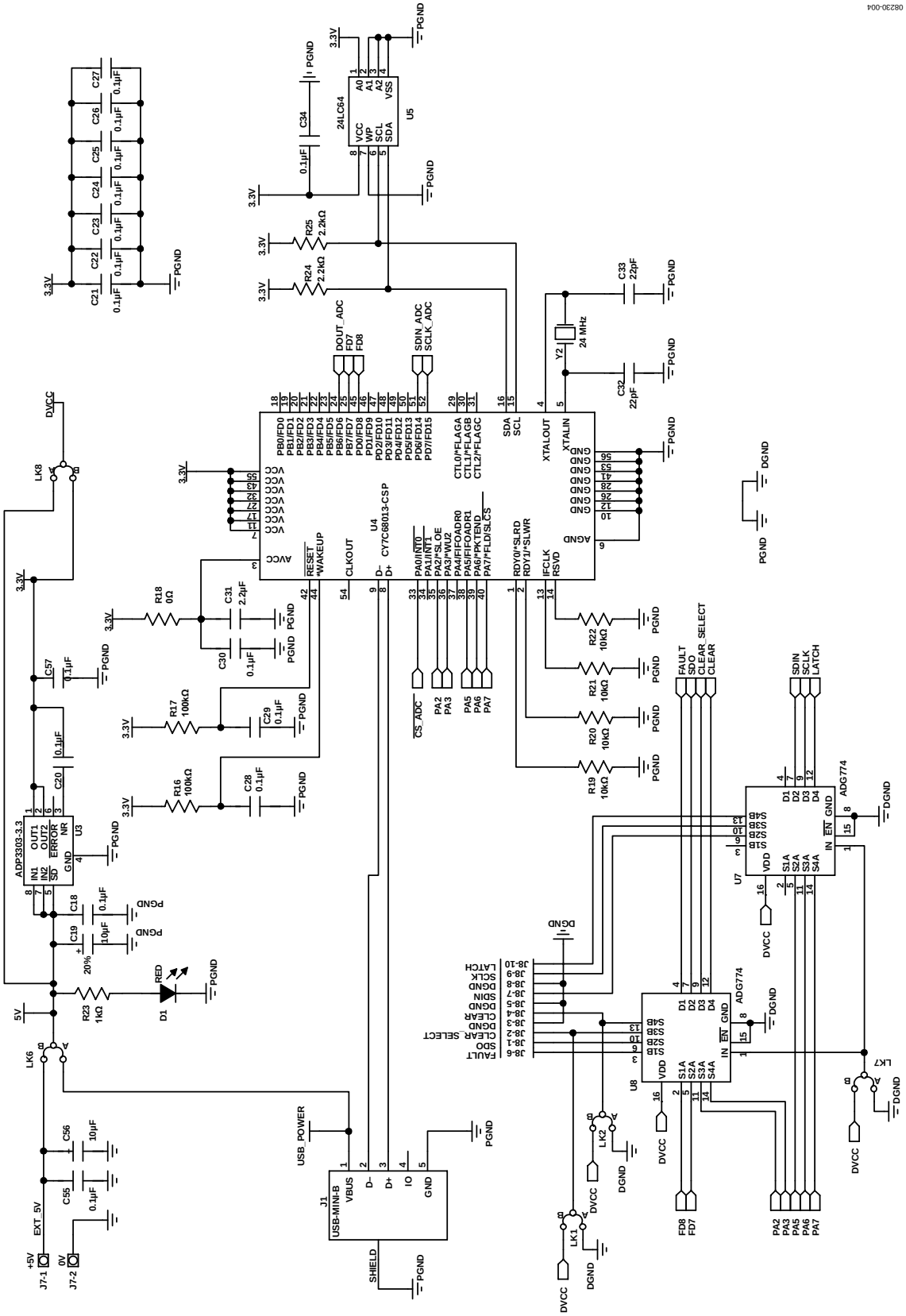

Figure 5. AD5422 TSSOP Evaluation Board Schematic of the Controller Circuitry

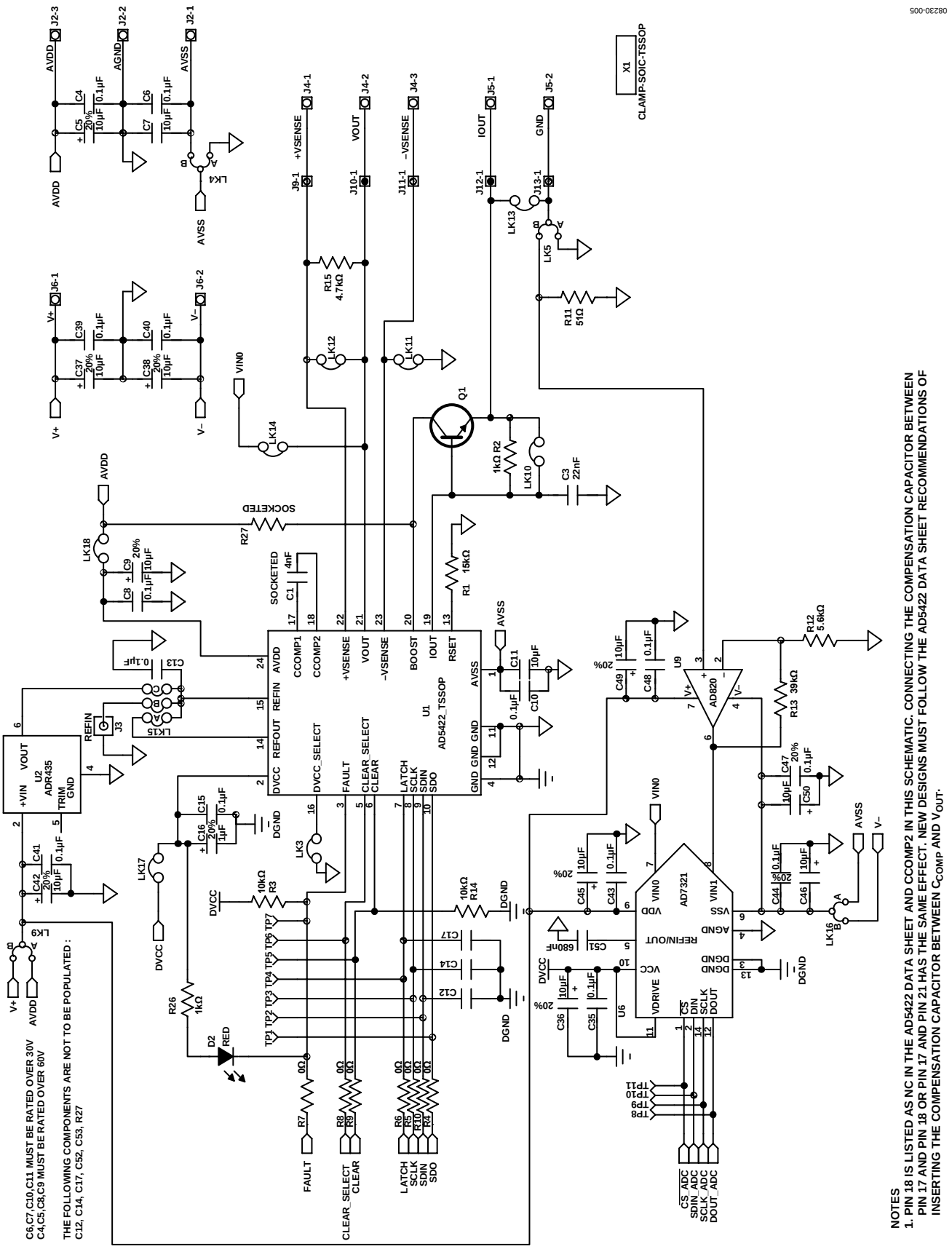

Figure 6. AD5422 TSSOP Evaluation Board Schematic of the AD5422 Circuitry

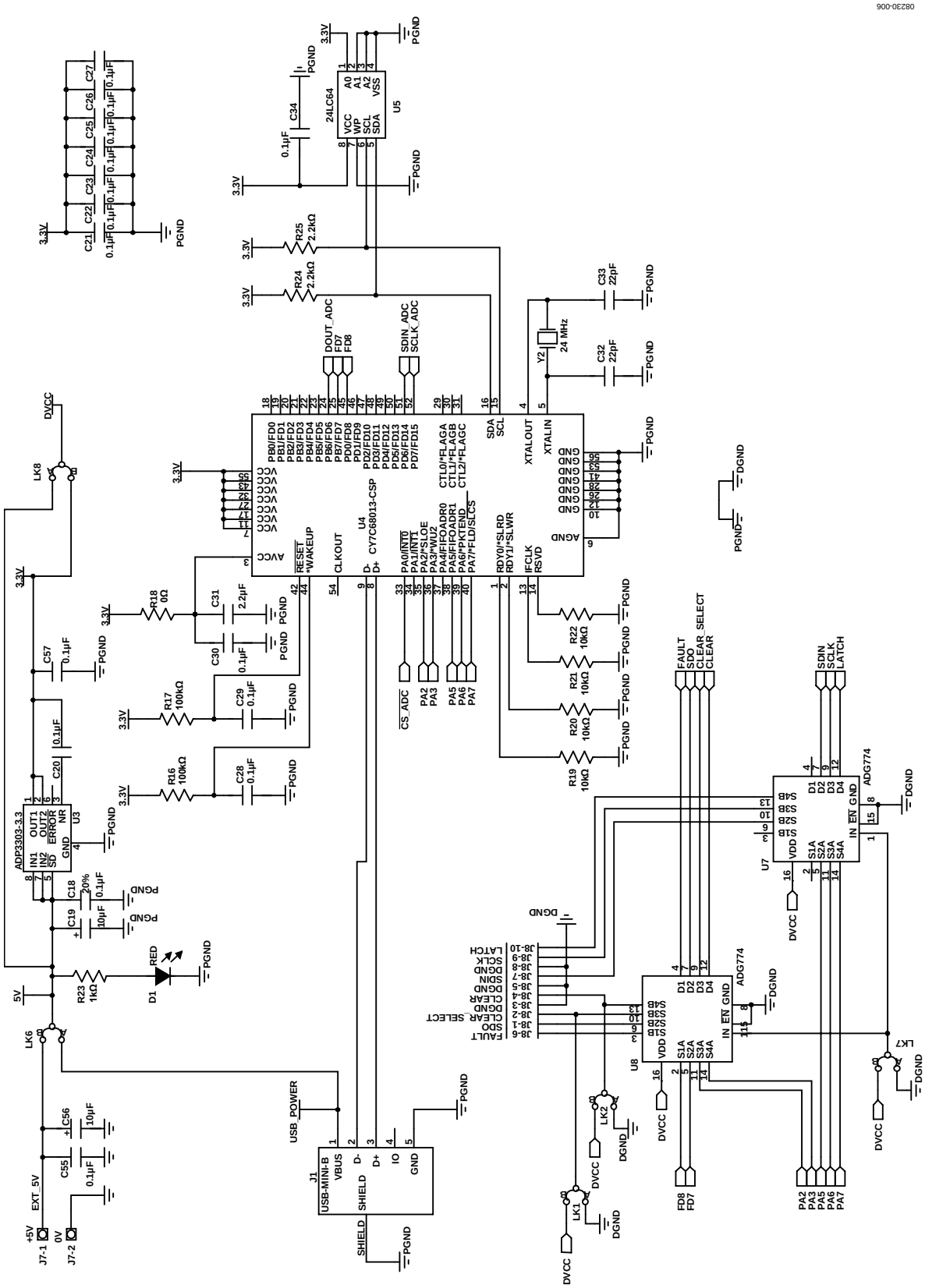

Figure 7. AD5422 LFCSP Evaluation Board Schematic of the Controller Circuitry

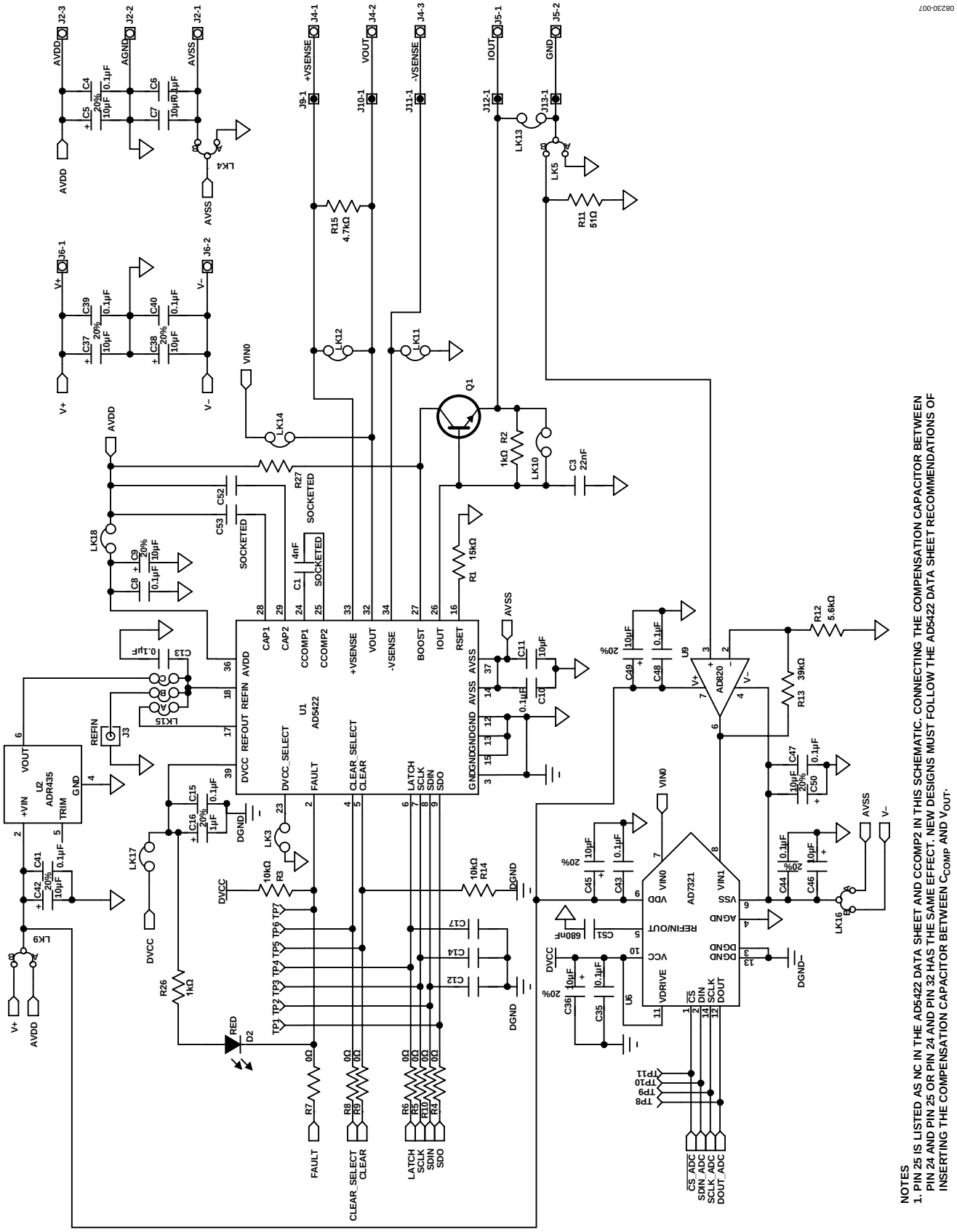

Figure 8. AD5422 LFCSP Evaluation Board Schematic of the AD5422 Circuitry

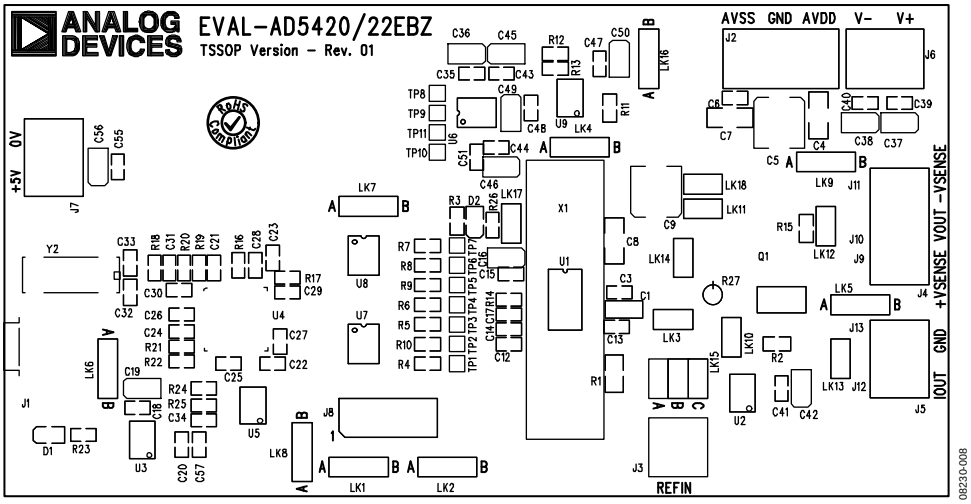

Figure 9. AD5422 TSSOP Evaluation Board Component Placement

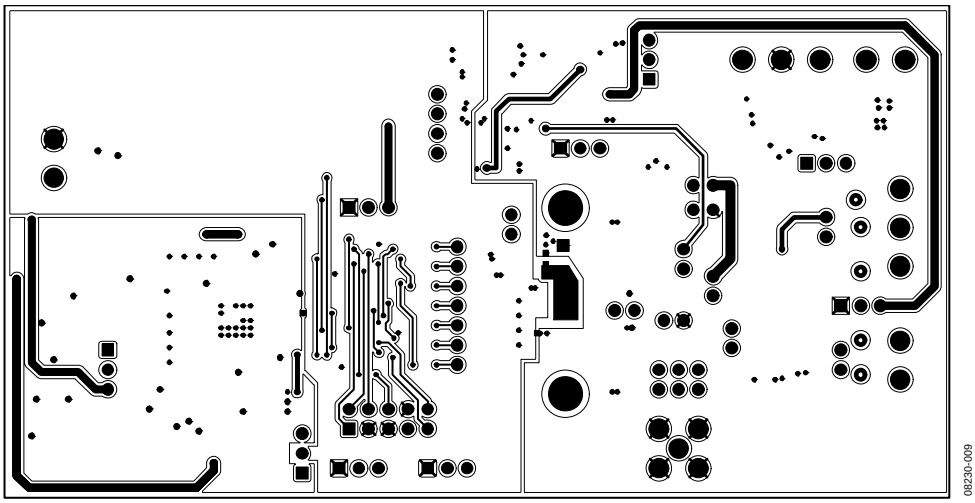

Figure 10. AD5422 TSSOP Evaluation Board Solder Side PCB

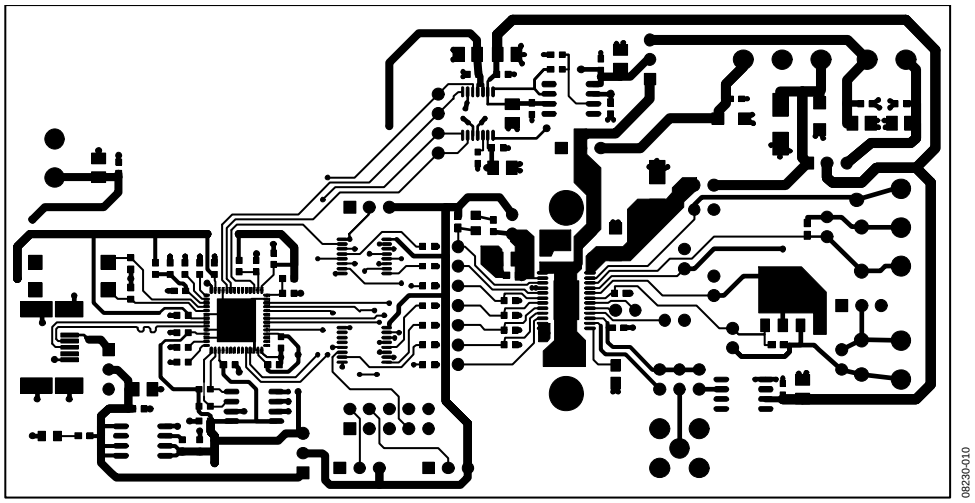

Figure 11. AD5422 TSSOP Evaluation Board Component Side PCB

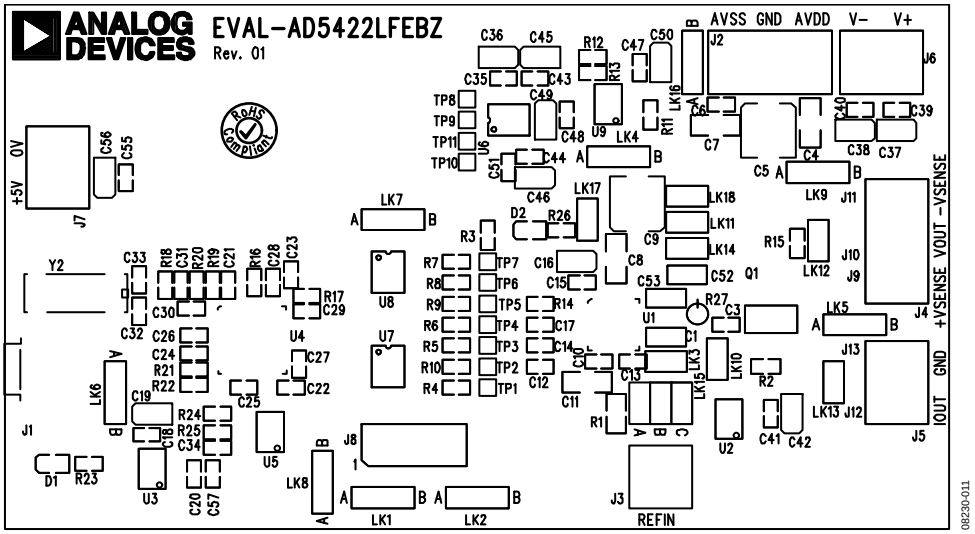

Figure 12. AD5422 LFCSP Evaluation Board Component Placement

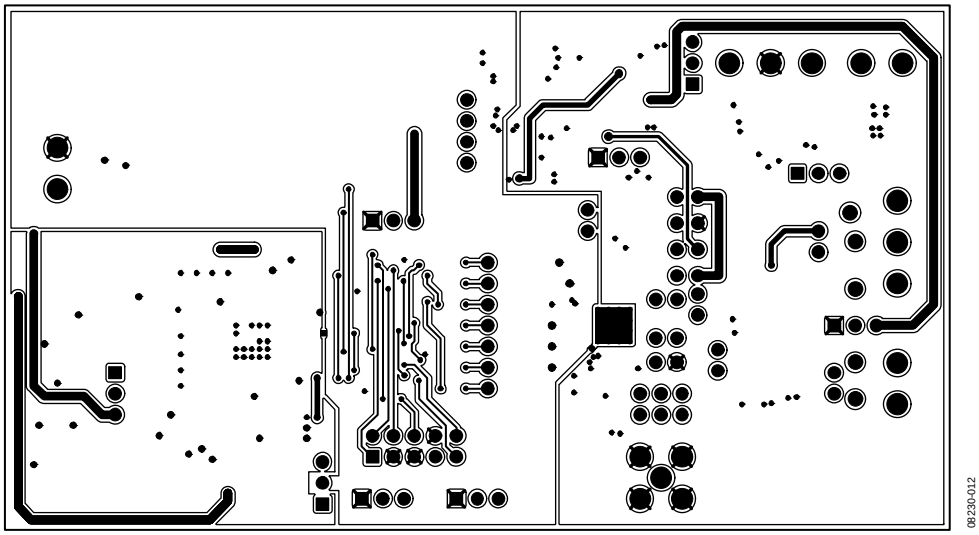

Figure 13. AD5422 LFCSP Evaluation Board Solder Side PCB

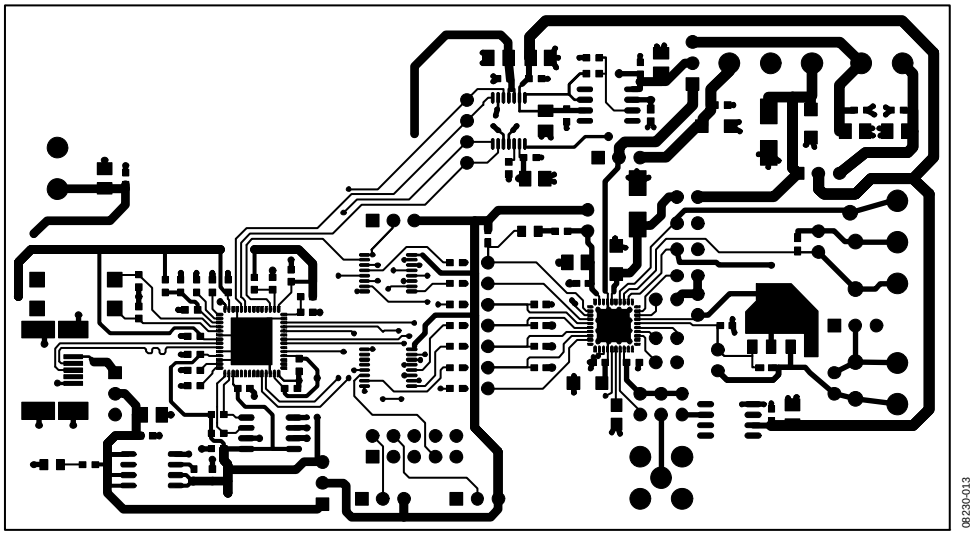

Figure 14. AD5422 LFCSP Evaluation Board Component Side PCB

ORDERING INFORMATION

BILL OF MATERIALS

Table 5.

Qty	Reference Designator	Description	Supplier/Number
1	U1	16-bit current source DAC (TSSOP Package)	Analog Devices/AD5422BREZ
		16-bit current source DAC (LFCSP Package)	Analog Devices/AD5422BCPZ
1	U2	5 V voltage reference	Analog Devices/ADR435ARZ
1	U3	3.3 V low dropout voltage regulator	Analog Devices/ADP3303ARZ-3.3
1	U4	USB microcontroller	Cypress Semiconductor/ CY7C68013-56LFXC
1	U5	64 K EEPROM	Digi-Key/24LC64-I/SN-ND
1	U6	12-bit ADC	Analog Devices/AD7321BRUZ
2	U7, U8	Quad 2:1 multiplexer	Analog Devices/ADG774BRQZ
1	U9	Low noise, precision operational amplifier	Analog Devices/OP27GSZ
1	C3	22 nF, 16 V X7R ceramic capacitor	FEC 165-8869
2	C4, C8	0.1 µF, 100 V ceramic capacitor	FEC 1288275
2	C5, C9	10 µF, 63 V (FK series) electrolytic capacitor	FEC 9696008
2	C6, C10	0.1 µF, 50 V, X7R ceramic capacitor	FEC 1288255
2	C7, C11	10 µF, 35 V, Y5V ceramic capacitor	Digi-Key/587-1352-1-ND
25	C13, C15, C18, C20, C21, C22, C23, C24, C25, C26, C27, C28, C29, C30, C34, C35, C39, C40, C41, C43, C44, C47, C48, C55, C57	0.1 µF, 16 V X7R ceramic capacitor	FEC 1216538
1	C16	1 µF, 10 V SMD tantalum capacitor	FEC 197099
10	C19, C36, C37, C38, C42, C45, C46, C49, C50, C56	10 µF SMD tantalum capacitor	
1	C31	2.2 µF, 10 V, Y5V ceramic capacitor	FEC 9402098
2	C32, C33	22 pF, 50 V NPO ceramic capacitor	FEC 722005
1	C51	680 nF, 16 V, Y5V ceramic capacitor	Digi-Key/490-1581-1-ND
9	LK1, LK2, LK4, LK5, LK6, LK7, LK8, LK9, LK16	3-pin (0.1" pitch) header and jumper socket	FEC 1022249 and FEC 150-411
8	LK3, LK10, LK11, LK12, LK13, LK14, LK17, LK18	2-pin (0.1" pitch) header and jumper socket	FEC 1022247 FEC 150-411
1	LK15	6-pin (3 × 2) 0.1" header and jumper socket	FEC 1022231 and FEC 150411
1	J1	USB mini-B connector	FEC 9786490
2	J2, J4	3-pin terminal block (5 mm pitch)	FEC 151790
1	J3	50 Ω SMB jack	FEC 1111349
3	J5, J6, J7	2-pin terminal block (5 mm pitch)	FEC 151789
1	J8	2-row, 36 + 36 header	FEC 1022244 (36 + 36 pin strip)
2	D1, D2	Red SMD LED	FEC 5790840
11	TP1 to TP11	Black test point	FEC 8731128
1	R1	15 kΩ SMD precision resistor	FEC 1140932
3	R2, R23, R26	1 kΩ SMD resistor	FEC 9330380
6	R3, R14, R19, R20, R21, R22	10 kΩ SMD resistor	FEC 9330399
8	R4 to R10, R18	0 Ω SMD resistor	FEC 9331662
1	R11	51 Ω SMD resistor	FEC 9331336
1	R12	5.6 kΩ SMD resistor	FEC 9331352
1	R13	39 kΩ SMD resistor	FEC 9331158
1	R15	4.7 kΩ SMD resistor	FEC 9331247
2	R16, R17	100 kΩ SMD resistor	FEC 9330402
2	R24, R25	2.2 kΩ SMD resistor	FEC 9330810
1	Y2	24 MHz plastic SMD crystal	FEC 9509658
1	Q1	NPN transistor, PBSS8110Z	FEC 8736677

NOTES

NOTES

ESD Caution

ESD (electrostatic discharge) sensitive device. Charged devices and circuit boards can discharge without detection. Although this product features patented or proprietary protection circuitry, damage may occur on devices subjected to high energy ESD. Therefore, proper ESD precautions should be taken to avoid performance degradation or loss of functionality.

Legal Terms and Conditions

By using the evaluation board discussed herein (together with any tools, components documentation or support materials, the "Evaluation Board"), you are agreeing to be bound by the terms and conditions set forth below ("Agreement") unless you have purchased the Evaluation Board, in which case the Analog Devices Standard Terms and Conditions of Sale shall govern. Do not use the Evaluation Board until you have read and agreed to the Agreement. Your use of the Evaluation Board shall signify your acceptance of the Agreement. This Agreement is made by and between you ("Customer") and Analog Devices, Inc. ("ADI"), with its principal place of business at One Technology Way, Norwood, MA 02062, USA. Subject to the terms and conditions of the Agreement, ADI hereby grants to Customer a free, limited, personal, temporary, non-exclusive, non-sublicensable, non-transferable license to use the Evaluation Board FOR EVALUATION PURPOSES ONLY. Customer understands and agrees that the Evaluation Board is provided for the sole and exclusive purpose referenced above, and agrees not to use the Evaluation Board for any other purpose. Furthermore, the license granted is expressly made subject to the following additional limitations: Customer shall not (i) rent, lease, display, sell, transfer, assign, sublicense, or distribute the Evaluation Board; and (ii) permit any Third Party to access the Evaluation Board. As used herein, the term "Third Party" includes any entity other than ADI, Customer, their employees, affiliates and in-house consultants. The Evaluation Board is NOT sold to Customer; all rights not expressly granted herein, including ownership of the Evaluation Board, are reserved by ADI. CONFIDENTIALITY. This Agreement and the Evaluation Board shall all be considered the confidential and proprietary information of ADI. Customer may not disclose or transfer any portion of the Evaluation Board to any other party for any reason. Upon discontinuation of use of the Evaluation Board or termination of this Agreement, Customer agrees to promptly return the Evaluation Board to ADI. ADDITIONAL RESTRICTIONS. Customer may not disassemble, decompile or reverse engineer chips on the Evaluation Board. Customer shall inform ADI of any occurred damages or any modifications or alterations it makes to the Evaluation Board, including but not limited to soldering or any other activity that affects the material content of the Evaluation Board. Modifications to the Evaluation Board must comply with applicable law, including but not limited to the RoHS Directive. TERMINATION. ADI may terminate this Agreement at any time upon giving written notice to Customer. Customer agrees to return to ADI the Evaluation Board at that time. LIMITATION OF LIABILITY. THE EVALUATION BOARD PROVIDED HEREUNDER IS PROVIDED "AS IS" AND ADI MAKES NO WARRANTIES OR REPRESENTATIONS OF ANY KIND WITH RESPECT TO IT. ADI SPECIFICALLY DISCLAIMS ANY REPRESENTATIONS, ENDORSEMENTS, GUARANTEES, OR WARRANTIES, EXPRESS OR IMPLIED, RELATED TO THE EVALUATION BOARD INCLUDING, BUT NOT LIMITED TO, THE IMPLIED WARRANTY OF MERCHANTABILITY, TITLE, FITNESS FOR A PARTICULAR PURPOSE OR NONINFRINGEMENT OF INTELLECTUAL PROPERTY RIGHTS. IN NO EVENT WILL ADI AND ITS LICENSORS BE LIABLE FOR ANY INCIDENTAL, SPECIAL, INDIRECT, OR CONSEQUENTIAL DAMAGES RESULTING FROM CUSTOMER'S POSSESSION OR USE OF THE EVALUATION BOARD, INCLUDING BUT NOT LIMITED TO LOST PROFITS, DELAY COSTS, LABOR COSTS OR LOSS OF GOODWILL. ADI'S TOTAL LIABILITY FROM ANY AND ALL CAUSES SHALL BE LIMITED TO THE AMOUNT OF ONE HUNDRED US DOLLARS ($100.00). EXPORT. Customer agrees that it will not directly or indirectly export the Evaluation Board to another country, and that it will comply with all applicable United States federal laws and regulations relating to exports. GOVERNING LAW. This Agreement shall be governed by and construed in accordance with the substantive laws of the Commonwealth of Massachusetts (excluding conflict of law rules). Any legal action regarding this Agreement will be heard in the state or federal courts having jurisdiction in Suffolk County, Massachusetts, and Customer hereby submits to the personal jurisdiction and venue of such courts. The United Nations Convention on Contracts for the International Sale of Goods shall not apply to this Agreement and is expressly disclaimed.

UG08230-0-10/13(C)

ANALOG DEVICES

www.analog.com