Evaluation Board User Guide
UG-467

One Technology Way • P.O. Box 9106 • Norwood, MA 02062-9106, U.S.A. • Tel: 781.329.4700 • Fax: 781.461.3113 • www.analog.com

Evaluating the ADP5061 Tiny I²C Programmable Linear Battery Charger with Power Path and USB Mode Compatibility

FEATURES

Input voltage 4.0 V to 6.7 V
High current terminals for ADP5061 power connection (VINx), system voltage (ISO_Sx), and battery voltage (ISO_Bx) pins
ADP5061 operation configurable via I²C interface
Evaluation software included

PACKAGE CONTENTS

ADP5061CB-EVALZ evaluation board
USB Micro A-to-USB Micro B cable
USB A adapter board
Evaluation CD: ADP5061 evaluation software installer

HARDWARE REQUIREMENTS

USB-to-serial-I/O interface USB-SDP-CABLEZ (USB-SDP-CABLEZ is not supplied in the evaluation kit and should be ordered separately from Analog Devices, Inc.)

SOFTWARE REQUIREMENTS

Analog Devices ADP5061 SDP evaluation software

GENERAL DESCRIPTION

The ADP5061 charger evaluation system is composed of an evaluation board, an USB A-to-USB Micro B cable, and an USB A adapter board. All evaluation board functions and circuits are controlled via one I²C bus connector. The I²C bus interfaces with the ADP5061 directly, and the digital input/output signals are controlled through an on-board input/output expander circuit on the I²C bus. The evaluation board also features a 3.4 V regulator for VDDIO generation. The board contains jumpers and numerous test points for easy evaluation.

The ADP5061CB-EVALZ evaluation kit contains a CD with the ADP5061 graphical user interface (GUI) Version 3.0 installer. Use the GUI in conjunction with the USB-SDP-CABLEZ USB to serial I/O interface.

Full performance details are provided in the ADP5061 data sheet, and the ADP5061 data sheet should be consulted in conjunction with this user guide.

ADP5061 EVALUATION BOARD

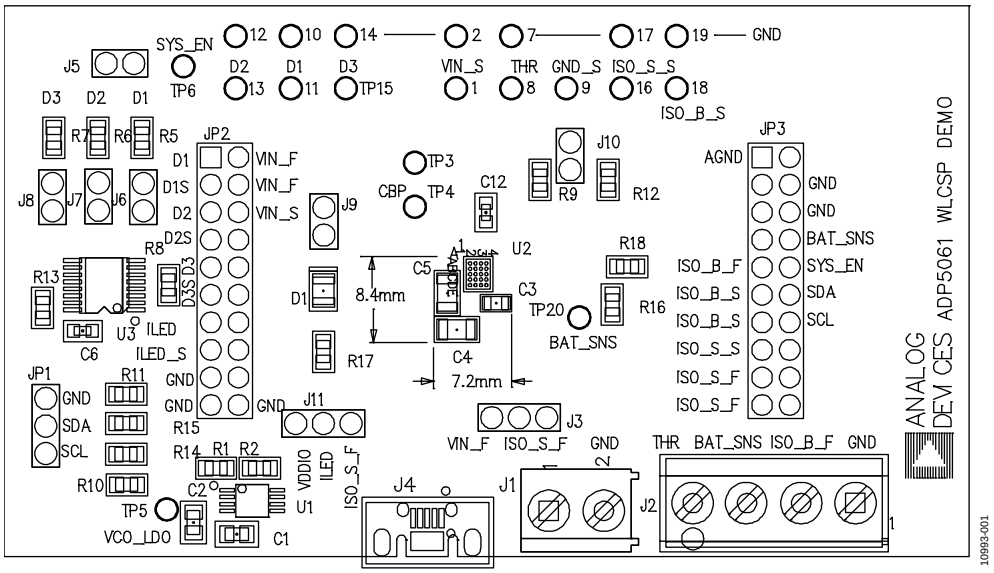

Figure 1.

TABLE OF CONTENTS

REVISION HISTORY

11/12—Revision 0: Initial Version

EVALUATION BOARD SOFTWARE

INSTALLING ADP5061 EVALUATION SOFTWARE

Before installing the ADP5061 evaluation software, the drivers for the USB-SDP-CABLEZ must be installed. The software and the instructions can be obtained from www.analog.com/USB-SDP-CABLEZ.

After proper installation of the USB-SDP-CABLEZ drivers, insert the ADP5061CB-EVALZ setup CD and run the **Setup.exe**.

USING THE SOFTWARE GUI

The following are the GUI operation controls and status tools (see Figure 2):

1. Operation parameter controls
2. Functional enables
3. Interrupt register indicator (Register 0x0A)
4. Charger status
5. Battery status
6. Fault indicators
7. Watchdog control
8. Digital I/O controls
9. I²C Communication Status Indicators

OPERATING THE BOARD WITH THE GUI

Complete the following steps to use the board:

1. Before running the software, ensure that the Analog Devices USB-SDP-CABLEZ is plugged into the USB port of the PC.
2. Connect a 5 V power supply to VIN_F using the USB Micro A-to-USB Micro B connector or alternatively connect the power supply between the VIN_F test point and GND (see Figure 5).
3. Click **Start** > **All Programs** > **ADP506x GUI 3Vx SDP** > **ADP506x GUI SDP**. Once this step is completed, the software is ready to use.

VIN must be above 2.5 V in order for the I²C communication of the ADP5061 to start working. The VIN voltage level is monitored, and the indicators are shown in the charger status indicators (see Number 4 in Figure 2). The GUI automatically reads the content of the registers after every 0.3 seconds from the last action and updates the status of the registers on screen.

If there is a problem in the I²C communication, the status indicators show an error message (see Number 9 in Figure 2). When I²C communication is operational, status indicators show **I2C_STATUS_OK** (see Figure 2).

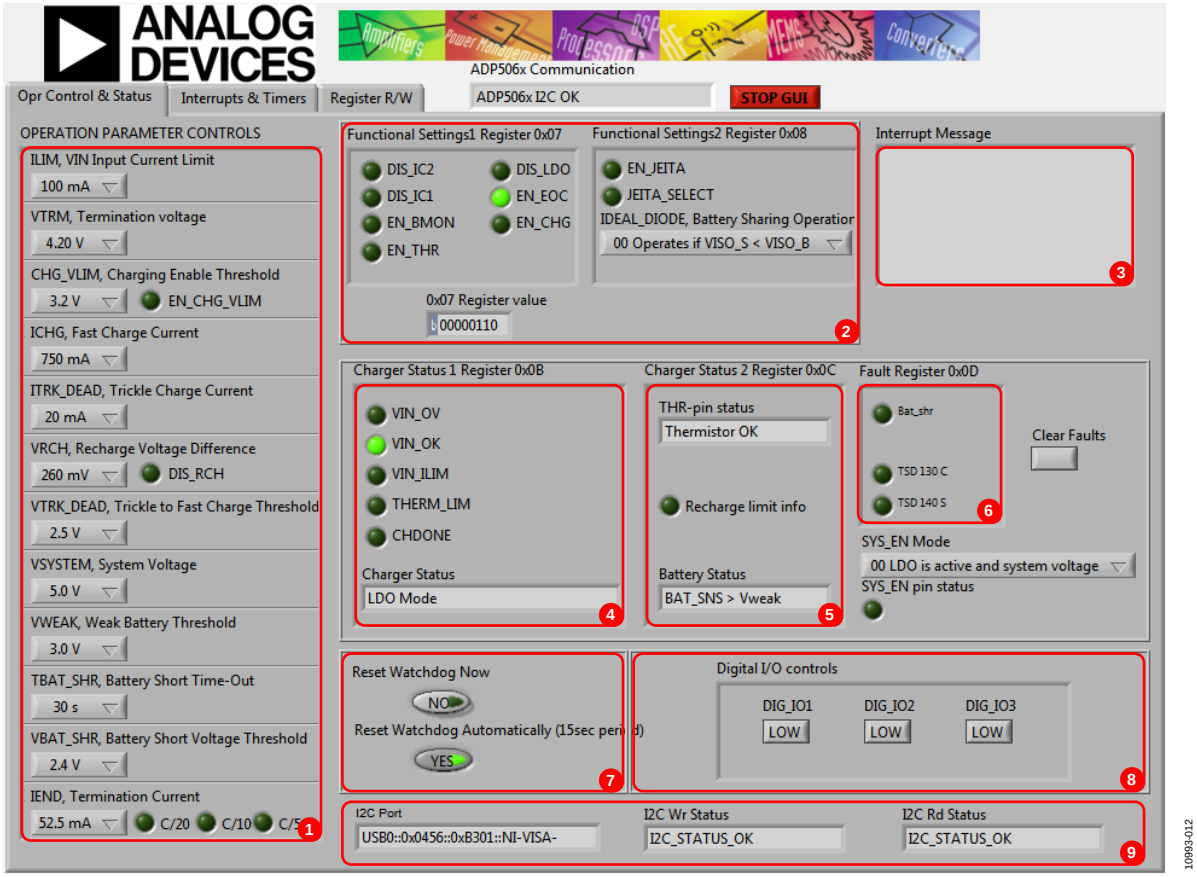

Figure 2. ADP5061 GUI Operation Control and Status Tab

BASIC CHARGING PARAMETER SETTINGS

After the input power supply is connected and is between 4.0 V and 6.7 V, the ADP5061 is operational and capable of charging the battery. Charging starts with default operational parameter settings. It is possible to change settings using the controls on the left side of the **Opr Control & Status** tab.

SETTING INTERRUPTS

The ADP5061 includes several interrupt flags to inform the system microcontroller of a status change in the corresponding charger function. All interrupts are disabled by default, and each interrupt can be separately enabled by issuing an I^2C write to Register 0x09.

The **Interrupts & Timers** tab (see Figure 3) in the GUI controls the register settings. Register 0x0A is automatically read after every 0.3 second timeout from the last user action involving the GUI. When a certain interrupt is enabled, and there is a status change in the corresponding function during charging, an interrupt message is shown in the **Opr Control & Status** tab (see Number 3 in Figure 2).

SETTING TIMERS

The default settings of the timers are shown in Figure 3. Changing the timer settings can be done by clicking items in the **Timer Settings (Write to Register 0x06)** box.

Register 0x09 controls the interrupt enables, and Register 0x06 controls the timer settings.

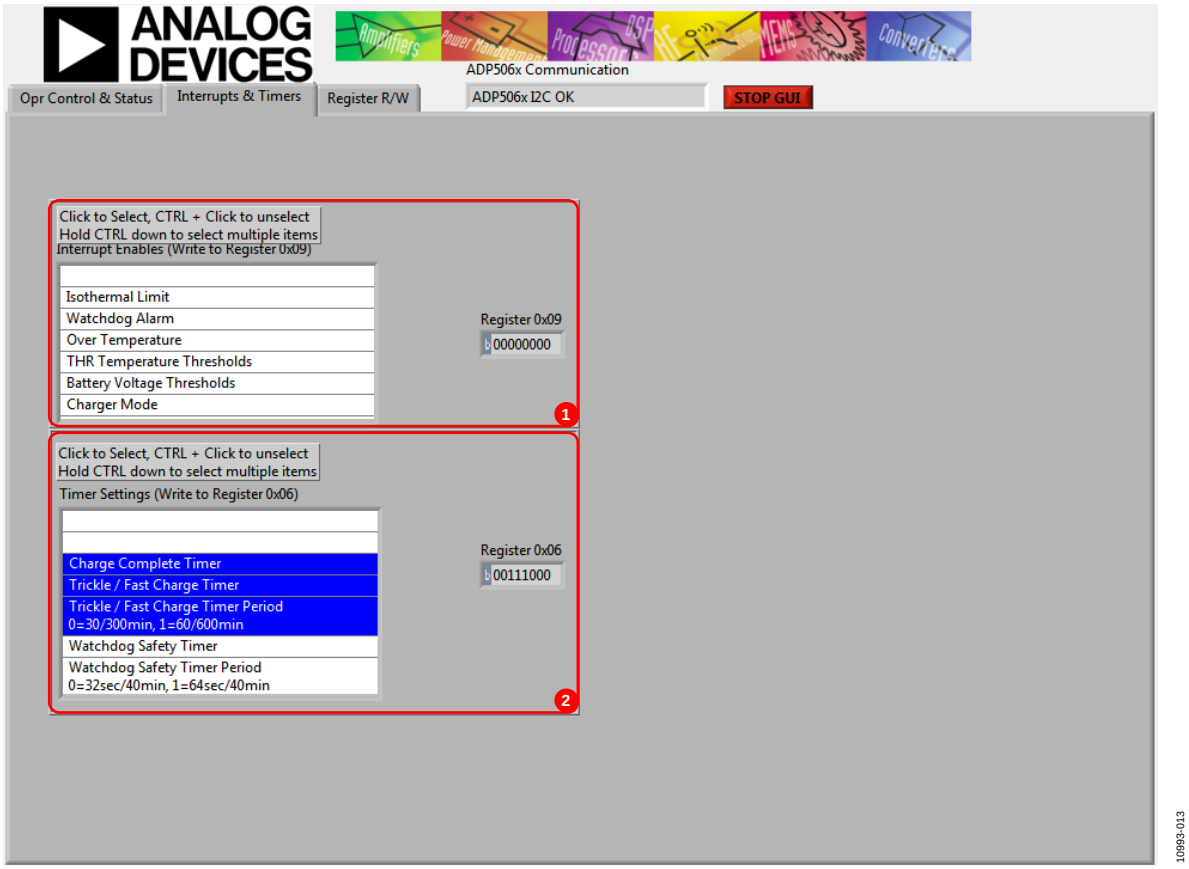

*Figure 3. ADP5061 Evaluation Software GUI, **Interrupts & Timers** Tab*

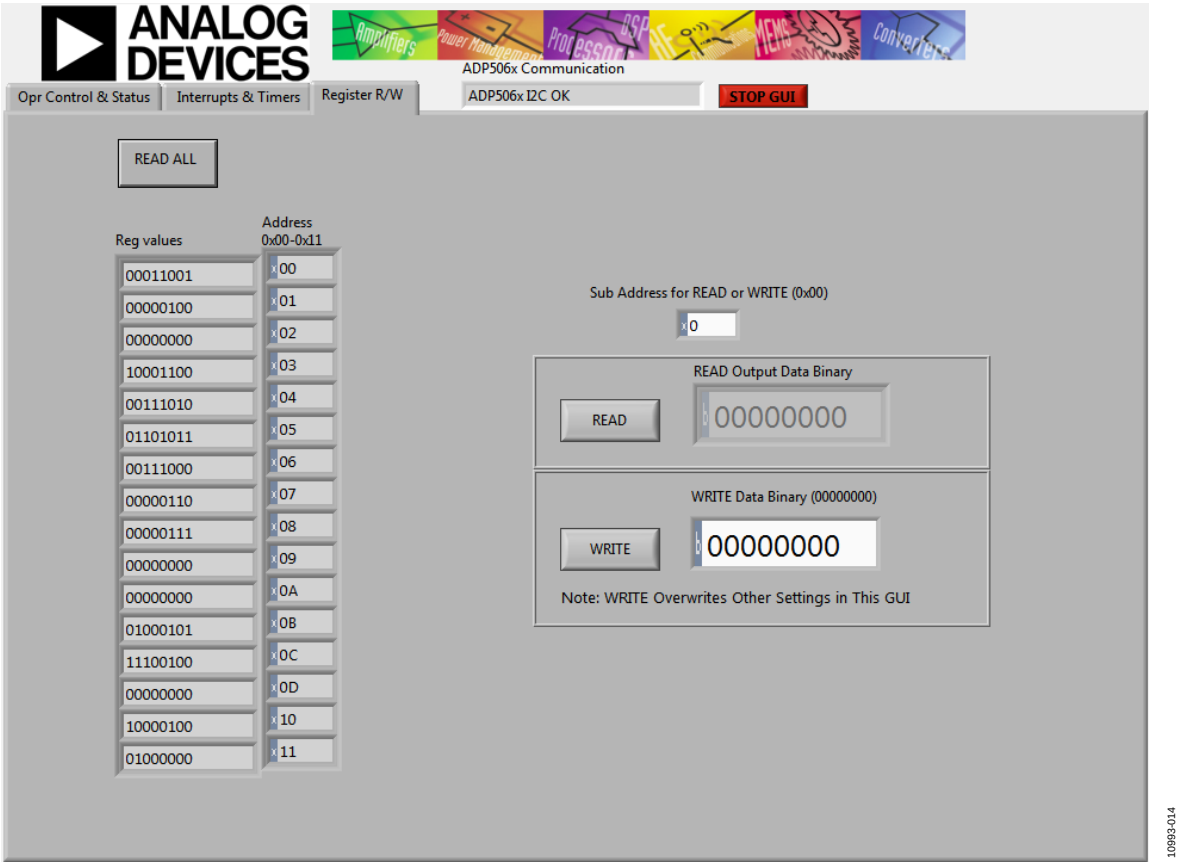

Figure 4. ADP5061 Evaluation Software GUI, Register R/W Tab

DIRECT REGISTER READ AND WRITE

It is possible to read and write the content of each register using the **Register R/W** tab as indicated in the GUI. Click **READ ALL** to update the contents of each register in the GUI. A single register read or write can be done using the controls on the right side of the **Register R/W** tab of the GUI. Type the I^{2}C sub address in the **Sub Address for READ and WRITE (0x00)** box, and then press **ENTER**. Click **READ** to read the binary data, or click **WRITE** to write the binary data. Type the binary data for an I^{2}C write, and then press **ENTER**. Note that some registers, such as Register 0x00 and Register 0x01, are read only registers and cannot be overwritten.

EVALUATION BOARD OVERVIEW

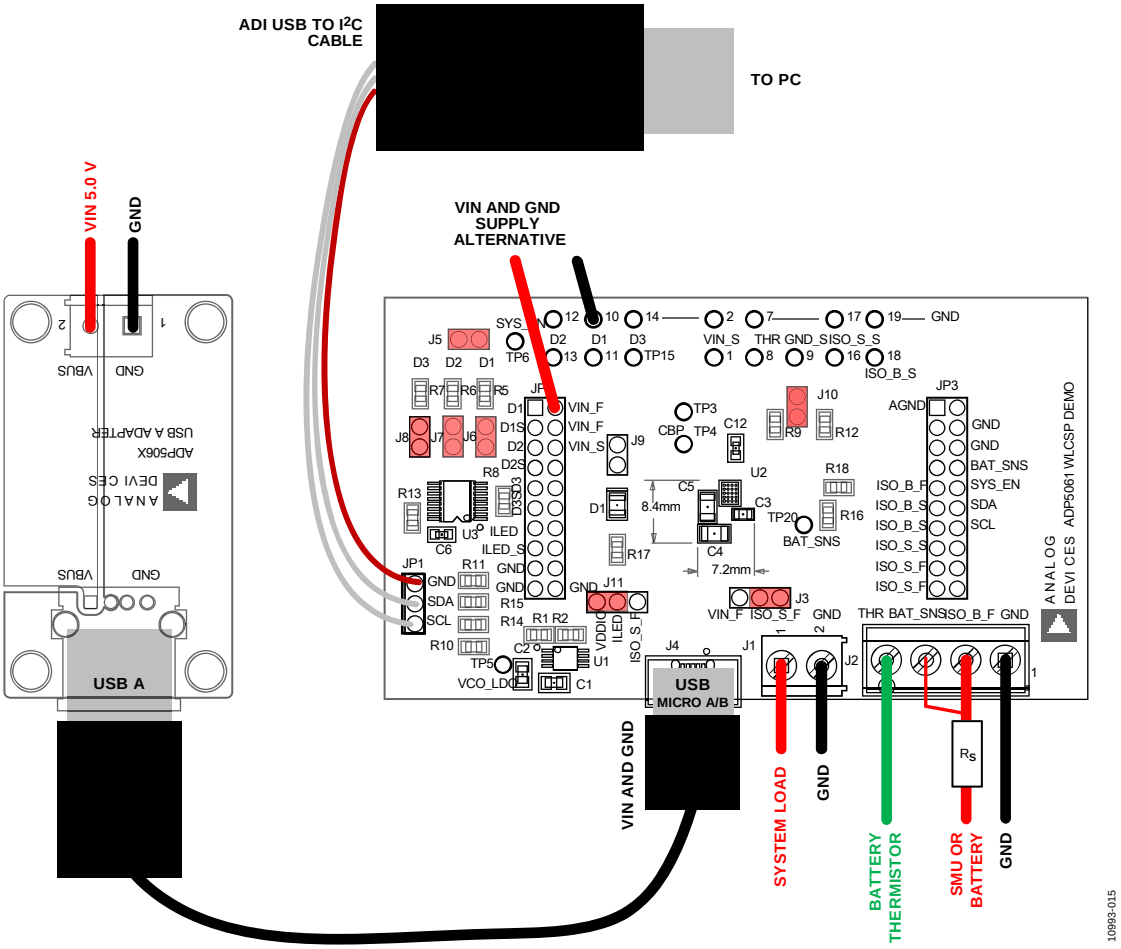

Figure 5. ADP5061 WLCSP Demo Board Typical Operation Setup.

TYPICAL OPERATION

The typical test setup for the ADP5061 charger consists of a dc power supply unit (PSU) for VIN_F, a source meter unit (SMU) or a battery simulator for the ISO_B_x pins, and a variable power resistor or electronic load for the ISO_S_x pins.

When the charger operates at high current rates, the voltage drop over the USB cable and USB connectors can be significant. For easy evaluation of real cable and connector losses, the ADP5061 evaluation kit contains an USB cable and an USB A adapter board that includes a screw terminal for the VIN_F voltage supply.

The SMU at the ISO_B node must have a 100 mΩ to 250 mΩ resistor (R_S) in series with its positive lead. The resistor emulates the equivalent series resistance of a real battery. Some SMU models that have been successfully used for the ISO_Bx node include the following:

- Keithley 2306 battery simulator
- Keithley 2602A SMU
- Agilent 6784A/6762A SMU

INPUT CURRENT

Measuring Total Input Current (I_{VIN})

When measuring VINx input quiescent currents, take into account that the evaluation board includes an LDO (U1) and I²C input/output (I/O) expander (see U2 and U3A in Figure 8). The LDO generates a 3.4 V VDDIO voltage for the I²C bus and SYS_EN open-drain output, and the I/O expander controls digital inputs DIG_IO1, DIG_IO2, and DIG_IO3.

In the ADP5061 evaluation board typical setup, the U1 and the U3 are powered through a pin header, J3. Typically, the combined current consumption of the U1 and the U3 are in the range of 1 mA to 2 mA. To separate the evaluation board quiescent current from the ADP5061 VINx quiescent current, leave J3 open and connect a second dc power supply (3.5 V to 5.0 V) to the TP5 test point (see Figure 6).

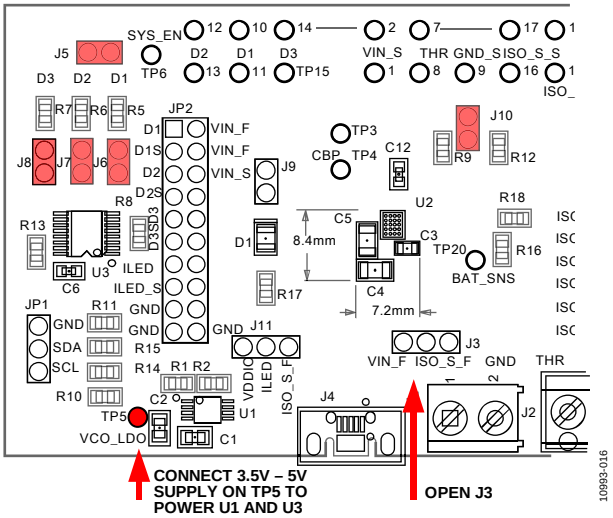

Figure 6. Board Setup for VINx Quiescent Current Measurement

VINx Current Limit

The VINx current limit of the ADP5061 can be evaluated in charging mode. Note that the maximum programming for the charge current into the battery (ISO_Bx) is 1300 mA. For measuring the input current limit across the full programming range from 100 mA to 2100 mA, additional system load has to be connected to the ISO_Sx pins.

To measure the VINx current limit, do the following:

1. Set the V_{VIN} supply voltage to 5.0 V.
2. Set the V_{ISO_B} voltage to 3.6 V on SMU B.
3. Enable charging by setting Register 0x07, Bit D0 (EN_CHG), to high.
4. Confirm that the ADP5061 is in charging mode by the following:
   - The **Battery Status** indicator on the GUI must show **BAT_SNS > Vweak** (see Figure 2).
   - The ADP5061 must start charging 80 mA to 90 mA current into the battery.
5. Measure the current on VINx supply.
6. Use the GUI to change the input current limit programming and repeat the measurement.

A 1300 mA charge current into the battery may not be large enough to drive the input current up to the limit when the current limit programming values of 1200 mA or higher are used. Connect an additional load on the ISO_Sx node to evaluate the higher end of the input current limit programming range.

TRICKLE CHARGE CURRENT

Trickle charge can only be activated during a battery charging startup sequence, if the voltage level at the ISO_Bx pins is lower than the V_{TRK_DEAD} threshold (typically 2.5 V). When V_{VIN} is 5.0 V, initiate a charge startup sequence by setting an I²C write of Register 0x07, Bit D0 (EN_CHG), high. To measure the trickle charge current level, do the following:

1. Set the V_{ISO_B} voltage (SMU or battery simulator) to 2 V.
2. Set the V_{IN} supply voltage to 5.0 V.
3. Check that the GUI **Charger Status** indicator shows **Trickle Charge**.
4. Check that the GUI **Battery Status** indicator shows **BAT_SNS < Vtrk**.
5. Check the battery short detection by doing the following:
   - Wait for a 30 second timeout to expire
   - Check that the GUI shows that the I²C fault register (Register 0x0D, Bit D3) BAT_SHR flag is set.
   - Use the GUI to change the battery short timeout setting from 1 second to 180 second.
6. Measure the trickle charge current level to the battery. The default value for I_{TRK_DEAD} is 20 mA. It is possible to change the trickle charge current setting from 5 mA to 80 mA using the GUI.
7. Adjust the V_{ISO_B} voltage up until the **Battery Status** indicator shows **Vtrk < BAT_SNS < Vweak**.
8. The **Charger Status** indicator on the GUI should show **Fast Charge (CC-Mode)**. The charge current is now programmed $I_{CHG} + I_{TRK\_DEAD}$, if it is not limited by the input current limit.

FAST CHARGE CURRENT

To measure the fast change current, do the following:

1. Set the V_{IN} supply voltage to 5.0 V.
2. Set V_{ISO_B} to 3.9 V.
3. Verify that the GUI **Battery Status** indicator shows **BAT_SNS > Vweak**.
4. Set the VINx input current limit to the maximum value 2100 mA.
5. Measure the charge current into the battery. The default value for the fast charge current is 750 mA. It is possible to change the fast charge current setting from 50 mA to 1300 mA using the GUI.
6. The fast charge current may be reduced because of the following conditions:
   - The V_{BAT_SNS} level is close to the termination voltage V_{TRM} (default 4.20 V).
   - The die temperature T_J exceeds the isothermal charging temperature T_{LIM} (typically 115 °C).

TERMINATION VOLTAGE AND END OF CHARGE (EOC) CURRENT

Measuring Termination Voltage Using SMU or Battery Simulator

The ADP5061 fast charge constant voltage (CV) regulation is optimized for batteries with series resistance in the 100 mΩ to 250 mΩ range. When using a SMU or a battery simulator connected to the ISO_Bx, set the series resistance (R_S in Figure 5) within this range.

Some battery simulators, such as the Keithley 2306, have programmable source resistance integrated in the instrument itself. For SMU units, use an external resistor to obtain accurate measurement results of the termination voltage.

To measure the termination voltage, do the following:

1. Set the V_{VIN} supply voltage to 5.0 V.
2. Set the termination voltage to 4.2 V using the GUI.
3. Disable the EOC by setting the EN_EOC bit (D2) to low in the functional settings register, Register 0x07.
4. Disable charge complete timer register, Register 0x06, using the GUI (see Figure 3).
5. Sweep V_{ISO_B} up until **Charger Status** indicator in the GUI shows **Fast Charge (CV-Mode)**.
6. Sweep V_{ISO_B} up until charge current has dropped to 50 mA. In fast charge CV mode, 1 mV step up of V_{ISO_B} can reduce the charge current by several mA.
7. Measure termination voltage between the BAT_SNS (TP20) and GND_S (TP9) nodes.

Measuring EOC Current

To measure the EOC current, do the following:

8. Use the GUI to set the termination current to 52.5 mA.
9. Step V_{ISO_B} down 100 mV.
10. Enable the EOC by setting the EN_EOC bit (D2) to high in the functional settings register, Register 0x07.
11. Step V_{ISO_B} up and monitor the charge current for each step until the **Charger Status** indicator in the GUI shows **Charge Complete**. The last charge current value before **Charge Complete** is the charge complete current threshold. Charging stops and there is no current flowing into the ISO_Bx node.

Measuring Recharge Voltage

To measure the recharge voltage, do the following:

12. Step V_{ISO_B} down, and monitor the voltage until the **Charger Status** indicator on the GUI shows **Fast Charge (CC-Mode)** and charge current flows to the ISO_Bx node. Last value before the charger status change is the recharge voltage level. With default settings, the recharge voltage threshold is 3.94 V (V_{ISO_B}).
13. Use the GUI to change the termination current and recharge voltage programming. Repeat Step 9 to Step 12 to evaluate different settings.

THR INPUT AND JEITA SETTINGS

The THR input of the ADP5061 evaluation board is equipped with two 10 kΩ resistors (R9 and R12) and jumper J10. When using an actual Li-Ion NTC thermistor terminal, configure the board according to Figure 7.

1. Remove the R9 resistor.
2. Connect the Li-Ion battery NTC thermistor to the screw terminal, J2, at Pin 4.

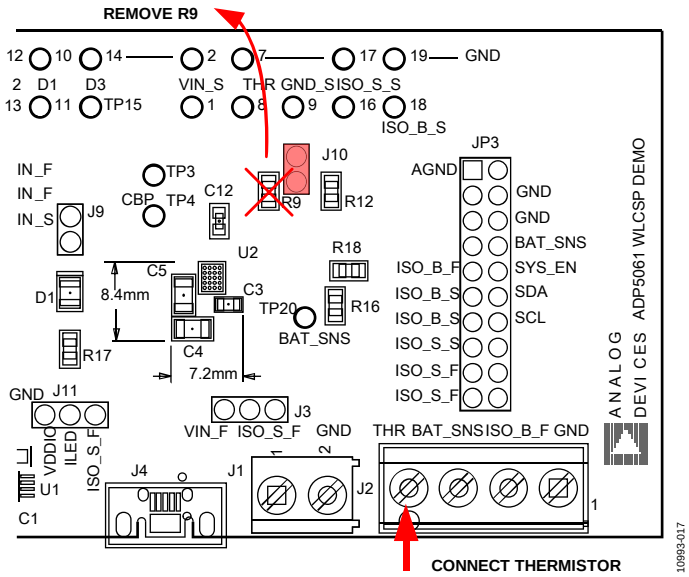

Figure 7. THR Input Evaluation Setup.

Evaluating THR Input Using Typical Board Setup

To evaluate the THR input using the typical board setup, do the following:

1. Set the V_{IN} supply voltage to 5.0 V.
2. Set V_{ISO_B} to 3.9 V.
3. Set the charge current setting to 750 mA using the GUI.
4. Set V_{IN} input current limit to 1500 mA.
5. Enable charging (EN_CHG = high).
6. Measure current to ISO_Bx, value should be 750 mA.
7. Remove jumper J10 from the board.
8. The **THR-pin status** indicator on the GUI must show **BatCool**.
9. Enable JEITA by setting EN_JEITA bit high in functional settings register, Register 0x08.
10. Measure current to ISO_Bx. Charging current must now be half of the fast charge current setting.
11. Reinstall Jumper J10 to the board.
12. The charge current must return to the full charge current setting value.
13. The **THR-pin status** indicator must show **Thermistor OK**.

Evaluating THR Input Using a Trimmer Resistor

It is possible to evaluate the resistance thresholds according to the JEITA Li-Ion battery temperature levels with a 50 kΩ trimmer resistor. Use the setup shown in Figure 7; however, connect the trimmer resistor to the THR input of the J2 screw terminal instead of the battery thermistor.

1. Set the V_{IN} supply voltage to 5.0 V.
2. Set V_{ISO_B} to 3.9 V.
3. Set the charge current setting to 750 mA using the GUI.
4. Set the V_{IN} input current limit to 1500 mA.
5. Enable charging (EN_CHG = high).
6. Enable JEITA by setting EN_JEITA bit high in functional settings register, Register 0x08.
7. Change the trimmer resistor setting to evaluate the JEITA thresholds. The THR input resistance thresholds are specified in the ADP5061 data sheet.
8. The **THR-pin status** indicator in the GUI must show **BatCold**, **BatCool**, **Thermistor OK**, **BatWarm**, or **BatHot** when adjusting the trimmer resistance from 50 kΩ to 0 Ω.

SCHEMATIC DIAGRAM

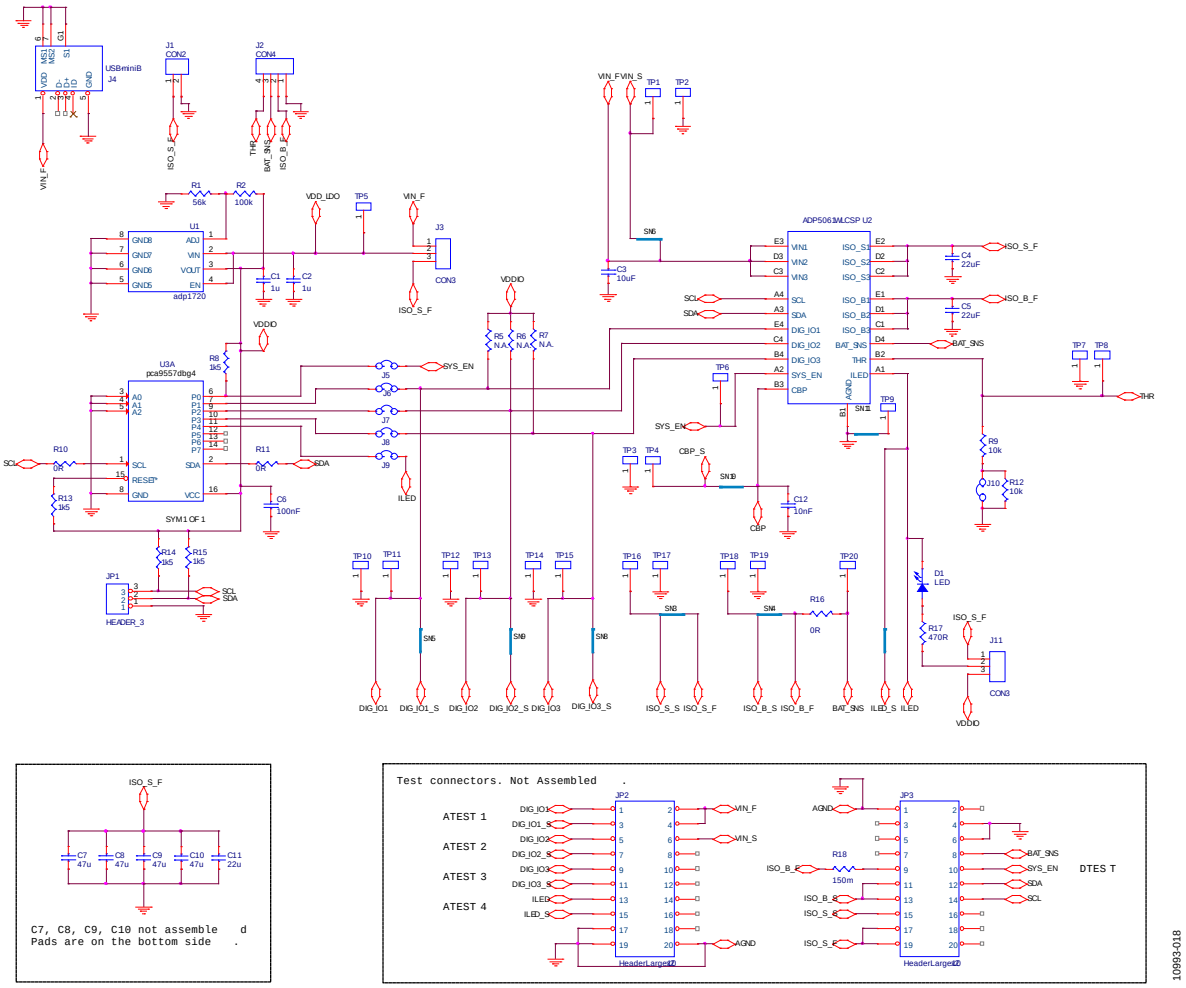

Figure 8. ADP5061 WLCSP Demo Board Schematic

ORDERING INFORMATION

BILL OF MATERIALS

Table 1.

Qty	Reference Designator	Description	Manufacturer/Vendor	Vendor Number
2	C1, C2	Capacitors, MLCC, 1 µF, 10 V, 0805, X7R	Murata	GRM21BR71A105KA01
1	C3	Capacitor, MLCC, 10 µF, 25 V, 0805, X5R	Murata	GRM21BR61E106MA73
3	C4, C5, C11	Capacitors, MLCC, 22 µF, 6.3 V, 1206, X5R	Murata	GRM31CR60J226ME19
1	C6	Capacitor, MLCC, 100 nF, 16 V, 0402, X7R	Murata	GRM155R71C104KA88
1	C12	Capacitor, MLCC, 10 nF, 16 V, 0402, X7R	Murata	GRM15XR71C103KA86
4	C7, C8, C9, C10	Capacitors, size 1206	Not assembled	Not assembled
1	D1	Red LED 2.2 mm × 1.4 mm	Toshiba or equivalent	TLRF1060(T18)
1	JP1	Connector header, 3 pins × 1 pin	Sullins Electronics	PEC36SAAN
2	JP2, JP3	Connector headers, 10 pins × 1 pin	Not assembled	Not assembled
1	J1	MKDS 1, 5/2-terminal block, PCB, 5 mm, 2-way	Phoenix Contact or equivalent	MKDS 1, 5/2
1	J2	Terminal block PCB connector, 4 position	Tyco Electronics	282836-4
2	J3, J11	Connector headers, 3 pins × 1 pin	Sullins Electronics	PEC36SAAN
1	J4	USB Micro AB connector receptacle	Molex	47590-0001
6	J5, J6, J7, J8 ,J9, J10	Connector headers, 2 pins × 1 pin	Sullins Electronics	PEC36SAAN
1	R1	Resistor, 56 kΩ, 1%, 0805, SMD	Vishay or equivalent	CRCW080556K0FKEA
1	R2	Resistor, 100 kΩ, 1%, 0805, SMD	Panasonic	ERJ-6ENF1003V
3	R5, R6, R7	Resistors, 0805, SMD, no assembly	Not applicable	Not applicable
4	R8, R13, R14, R15	Resistors, 1.5 kΩ, 1%, 0805, SMD	Vishay or equivalent	CRCW08051K50FKEA
2	R9, R12	Resistors, 10 kΩ, 1%, 0805, SMD	Vishay or equivalent	CRCW080510K0FKEA
3	R10, R11, R16	Resistors, 0 Ω, 1%, 0805, SMD	Vishay or equivalent	CRCW08050000Z0EA
1	R17	Resistor, 470 Ω, 1%, 0805, SMD	Vishay or equivalent	CRCW0805470RFKEA
1	R18	Resistor, 0.150 Ω, 1%, 0805, SMD	Rohm	MCR10EZHFLR150
20	TP1 to TP20	Test point, test header, 1.0 mm hole	Vero Technologies	20-2137
1	U1	ADP1720 50 mA high voltage, micropower linear regulator, 8-lead MSOP	Analog Devices, Inc.	ADP1720ARMZ-R7
1	U2	ADP5061 tiny I^2C programmable linear battery charger with power path and USB mode compatibility	Analog Devices, Inc.	ADP5061
1	U3A	8-bit I^2C-bus I/O port with reset	NXP	PCA9557PW, 112

NOTES

ESD Caution

ESD (electrostatic discharge) sensitive device. Charged devices and circuit boards can discharge without detection. Although this product features patented or proprietary protection circuitry, damage may occur on devices subjected to high energy ESD. Therefore, proper ESD precautions should be taken to avoid performance degradation or loss of functionality.

UG10993-0-11/12(0)

ANALOG DEVICES

www.analog.com