EVAL-AD5324DBZ User Guide
UG-975

One Technology Way • P.O. Box 9106 • Norwood, MA 02062-9106, U.S.A. • Tel: 781.329.4700 • Fax: 781.461.3113 • www.analog.com

Evaluating the AD5324 12-Bit, Quad Channel Voltage Output Digital-to-Analog Converter (DAC)

FEATURES

Full featured evaluation board (EVAL-AD5324DBZ) in conjunction with *nano*DAC motherboard (EVAL-MBnanoDAC-SDZ)
On-board references
Various link options
PC control in conjunction with Analog Devices, Inc., system demonstration platform (SDP)

EVALUATION KIT CONTENTS

EVAL-AD5324DBZ evaluation board
EVAL-MBnanoDAC-SDZ motherboard
USB cable

SOFTWARE REQUIRED

EVAL-AD5324DBZ evaluation software

HARDWARE REQUIRED

EVAL-SDP-CB1Z controller board (SDP-B controller board), must be purchased separately

GENERAL DESCRIPTION

This user guide details the operation of the EVAL-AD5324DBZ for the AD5324.

The EVAL-AD5324DBZ evaluation board is designed to quickly prototype AD5324 circuits and reduce design time. The AD5324 operates from a single 2.5 V to 5.5 V supply.

The EVAL-AD5324DBZ interfaces with the USB port of a PC via the SDP-B controller board. Software can be downloaded via the EVAL-AD5324DBZ product page that allows users to program the AD5324.

The EVAL-AD5324DBZ evaluation board requires the SDP-B controller board, which is available for order on the Analog Devices website.

Full data for the AD5324 can be found in the AD5324 data sheet available from Analog Devices and should be consulted in conjunction with this user guide when using the evaluation board.

PHOTOGRAPH OF THE EVAL-AD5324DBZ, EVAL-MBnanoDAC-SDZ, AND EVAL-SDP-CB1Z

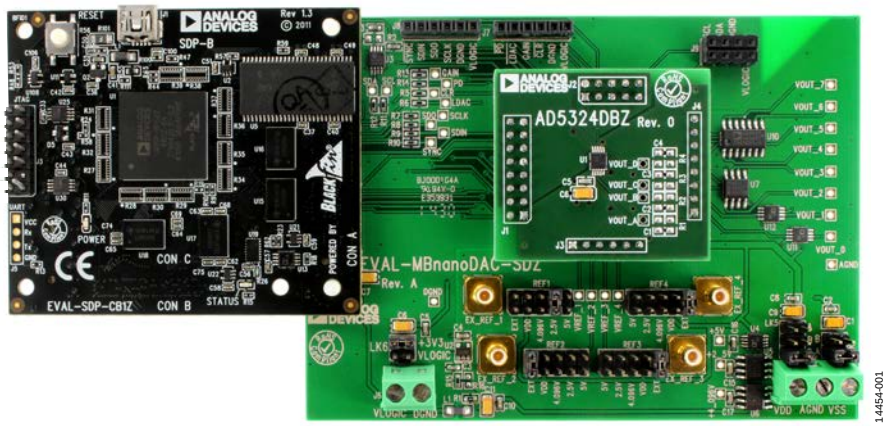

Figure 1.

TABLE OF CONTENTS

REVISION HISTORY

3/2017—Revision 0: Initial Version

EVALUATION BOARD HARDWARE

POWER SUPPLIES

The *nano*DAC® EVAL-MBnanoDAC-SDZ motherboard supports single and dual power supplies.

The EVAL-AD5324DBZ evaluation board can be powered from either the SDP-B port or externally by the J5 and J6 connectors, as described in Table 1.

Both AGND and DGND inputs are provided on the EVAL-AD5324DBZ evaluation board. The AGND and DGND planes connect at one location on the EVAL-MBnanoDAC-SDZ. It is recommended that AGND and DGND do not connect elsewhere in the system to avoid ground loop problems.

All supplies are decoupled to ground with 10 µF tantalum capacitors and 0.1 µF ceramic capacitors.

Table 1. Power Supply Connectors

Connector	Label	Voltage
J5, Pin 1 (J5-1)	VDD	Analog positive power supply, V_{DD}; 5.5 V single and dual supply
J5, Pin 2 (J5-2)	AGND	Analog ground
J5, Pin 3 (J5-3)	VSS	Analog negative power supply, V_{SS}; −5.5 V dual supply
J6, Pin 1 (J6-1)	VLOGIC	Digital supply from 1.8 V to V_{DD};
J6, Pin 2 (J6-2)	DGND	Digital ground

LINK OPTIONS

A number of link options are incorporated in the EVAL-MBnanoDAC-SDZ and must be set for the required operating conditions before using the EVAL-AD5324DBZ. Table 2 describes the positions of the links that control the evaluation board via the SDP-B controller board using a PC and external power supplies. The functions of these link options are described in detail in Table 3. The positions listed in Table 2 and Table 3 match the evaluation board imprints (see Figure 10).

Table 2. Link Positions Setup for SDP-B Control (Default)

Link Number	Position
REF1	2.5 V
REF2	EXT
REF3	EXT
REF4	EXT
LK5	C
LK6	+3V3
LK7	B

Table 3. Link Functions

Link Number	Position
REF1 to REF4	These links select the reference source. Position EXT selects an off board voltage reference via the appropriate EXT_REF connector. Position VDD selects V_{DD} as the reference source. Position 4.096V selects the on-board 4.096 V reference as the reference source. Position 2.5V selects the on-board 2.5 V reference as the reference source. Position 5V selects the on-board 5 V reference as the reference source.
LK5	This link selects the positive DAC analog voltage source. Position A selects the internal voltage source from the SDP-B controller board. Position B selects the internal voltage source 3.3 V from the ADP121. Position C selects an external supply voltage, V_{DD}.
LK6	This link selects the VLOGIC voltage source. Position +3V3 selects the digital voltage source from the SDP-B controller board, +3V3. Position VLOGIC selects an external digital supply voltage, V_{LOGIC}.
LK7	This link selects the negative DAC analog voltage source. Position A selects V_{SS}. Position B selects AGND.

EVALUATION BOARD SOFTWARE QUICK START PROCEDURES

INSTALLING THE EVAL-AD5324DBZ EVALUATION SOFTWARE

The EVAL-AD5324DBZ evaluation software is compatible with Windows® Vista (64-bit/32-bit) and Windows 7 (64-bit/32-bit).

Install the software before connecting the SDP-B controller board to the USB port of the PC to ensure the SDP-B controller board is recognized when it connects to the PC.

To install the EVAL-AD5324DBZ evaluation software, take the following steps:

1. Start the Windows operating system.
2. Download the installation software from the EVAL-AD5324DBZ evaluation board page.
3. Run the **setup.exe** file from the installer folder if it does not open automatically.
4. After the installation is complete, power up the evaluation board as described in the Power Supplies section.
5. Connect the EVAL-AD5324DBZ to the SDP-B controller board and the SDP-B controller board to the PC using the USB cable included in the evaluation kit.
6. When the software detects the EVAL-AD5324DBZ, proceed through any dialog boxes that appear to finalize the installation.

RUNNING THE SOFTWARE

To run the EVAL-AD5324DBZ evaluation software, proceed with the following steps:

1. Connect the EVAL-AD5324DBZ to the SDP-B controller board and connect the USB cable from the SDP-B board and the PC.
2. Power up the EVAL-AD5324DBZ as described in the Power Supplies section.
3. Click **Start** > **All Programs** > **Analog Devices** > **AD5324 Evaluation Software** to locate the evaluation board.

If the SDP-B controller board is not connected to the USB port when the software launches, a connectivity error displays (see Figure 2).

Connect the SDP-B controller board to the USB port of the PC and wait a few seconds. Once the SDP-B controller board and the EVAL-AD5324DBZ are detected, the display updates (see Figure 3).

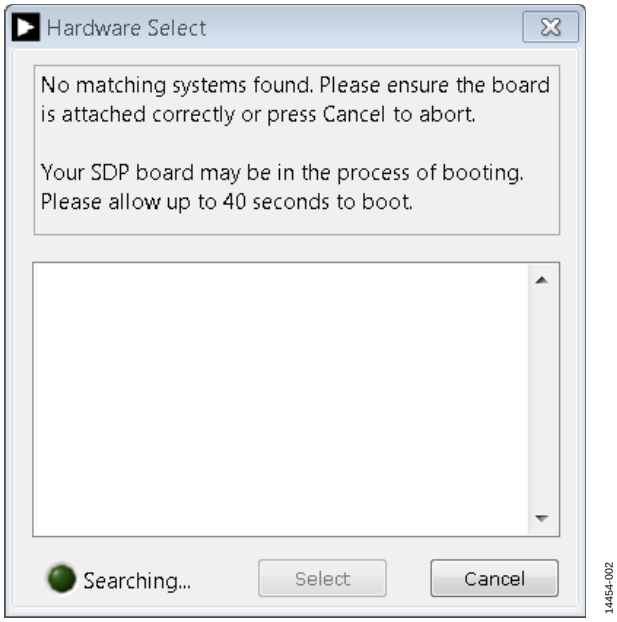

Figure 2. Connectivity Error

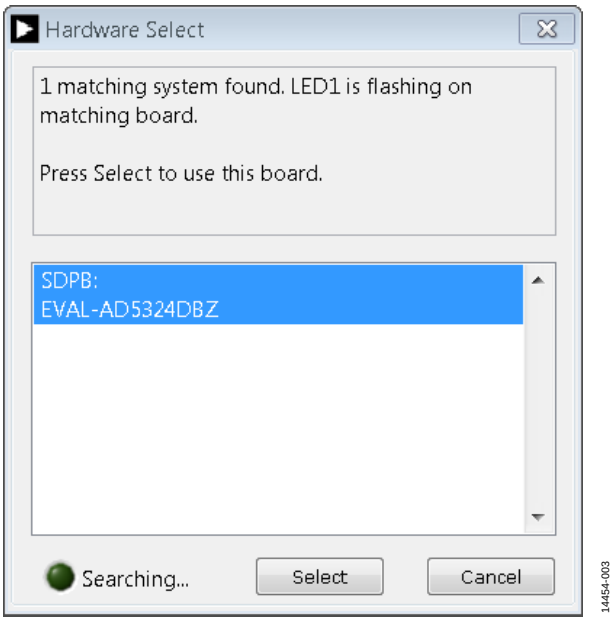

*Figure 3. **Hardware Select** Window*

Alternatively, the EVAL-AD5324DBZ evaluation software can be used without an evaluation board. The EVAL-AD5324DBZ evaluation software runs in simulation mode displaying expected outputs based on the input data. The main window of the EVAL-AD5324DBZ evaluation software then opens, as shown in Figure 4.

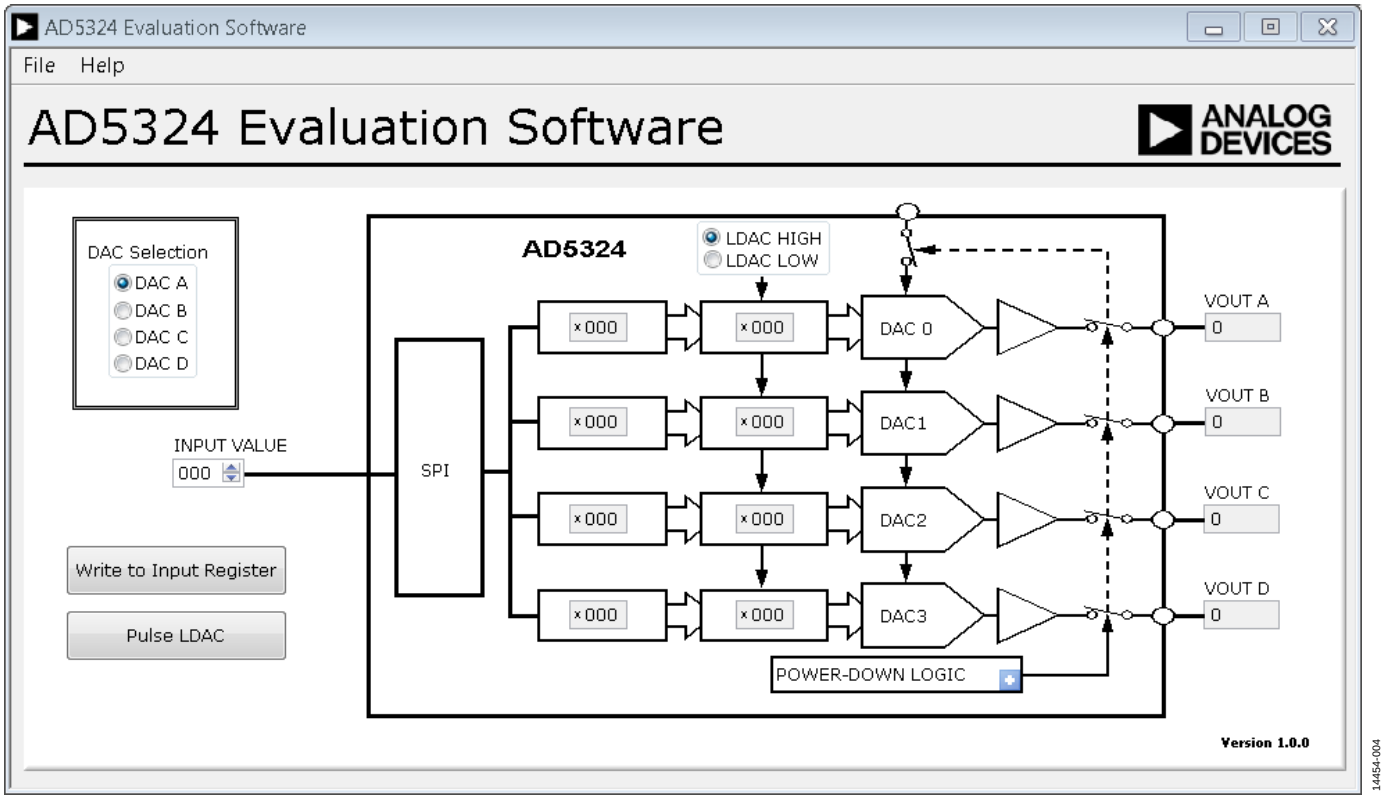

Figure 4. ***AD5324 Evaluation Board Software*** *Main Window*

SOFTWARE OPERATION

The EVAL-AD5324DBZ evaluation software allows the user to program values to the input and DAC registers of each DAC individually (see Figure 4).

Write to Input Register

Select the **Write to Input Register** button to load the code of the input data control to the input register of the selected DAC in the **DAC Selection** box.

LDAC Control

Select the **Pulse LDAC** button to bring the LDAC pin low and then high, copying the data from the input registers to the DAC registers, and updating the outputs accordingly.

The $\overline{\text{LDAC}}$ pin input logic can be set by selecting either **LDAC HIGH** or **LDAC LOW** on the upper middle part of the GUI.

Power-Down Control

All of the DACs can be powered down simultaneously. Click the blue progressive disclosure button on the **Power-Down Logic** block to access the selection box, shown in Figure 5. When the power-down setting for the DAC is selected, click **OK** to write the appropriate values to the AD5324.

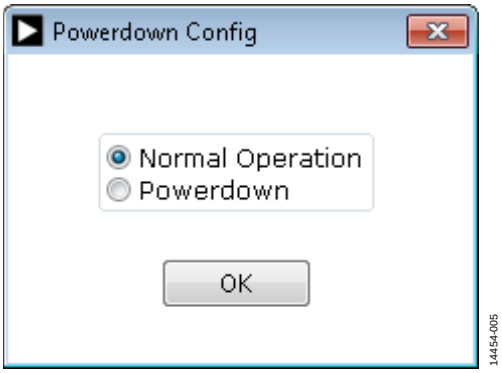

Figure 5. ***Powerdown Config*** *Window*

EVALUATION BOARD SCHEMATICS AND ARTWORK

EVAL-MBNANODAC-SDZ MOTHERBOARD

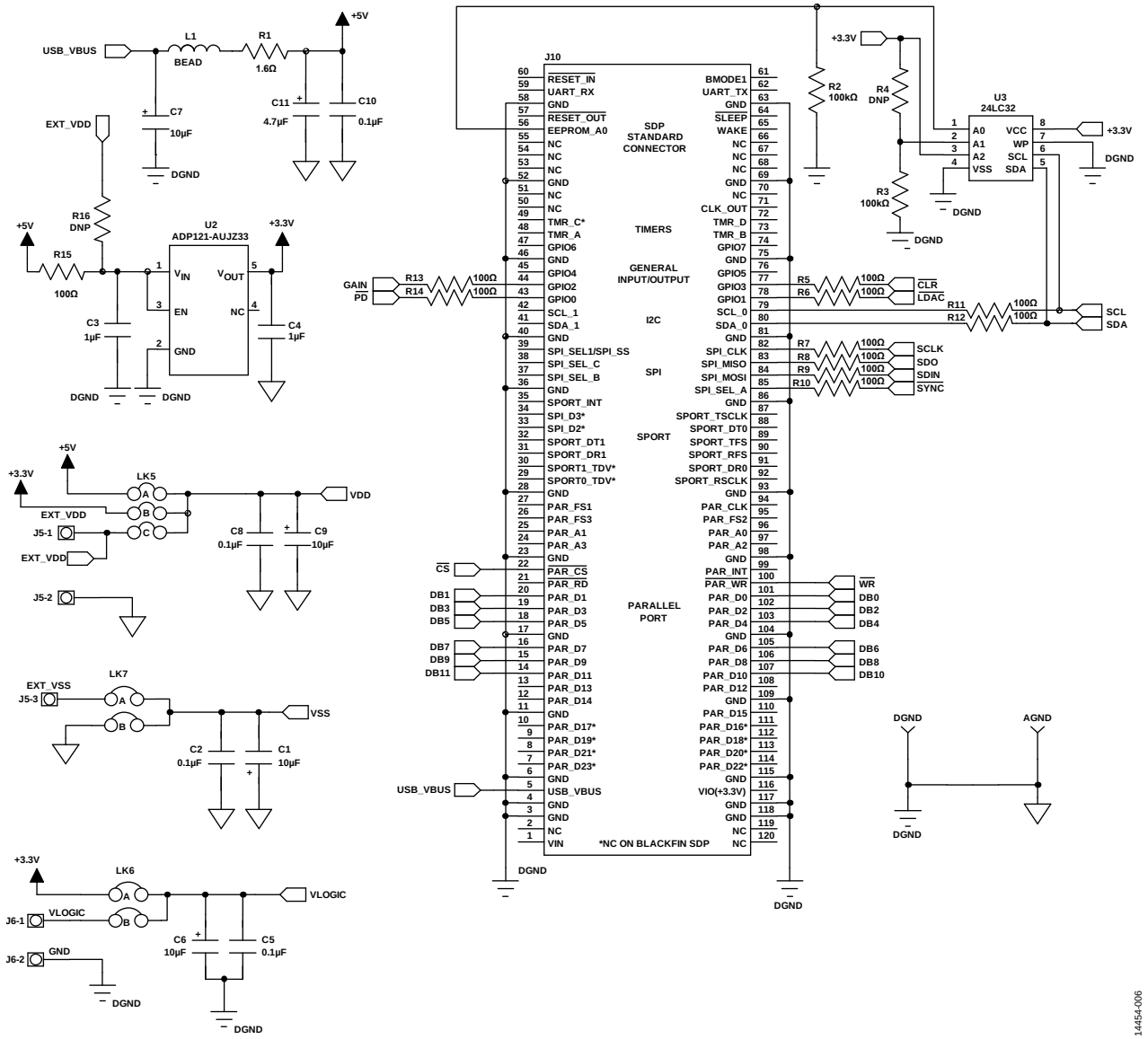

Figure 6. EVAL-MBnanoDAC-SDZ Motherboard, SDP-B Controller Board Connector, and Power Supply

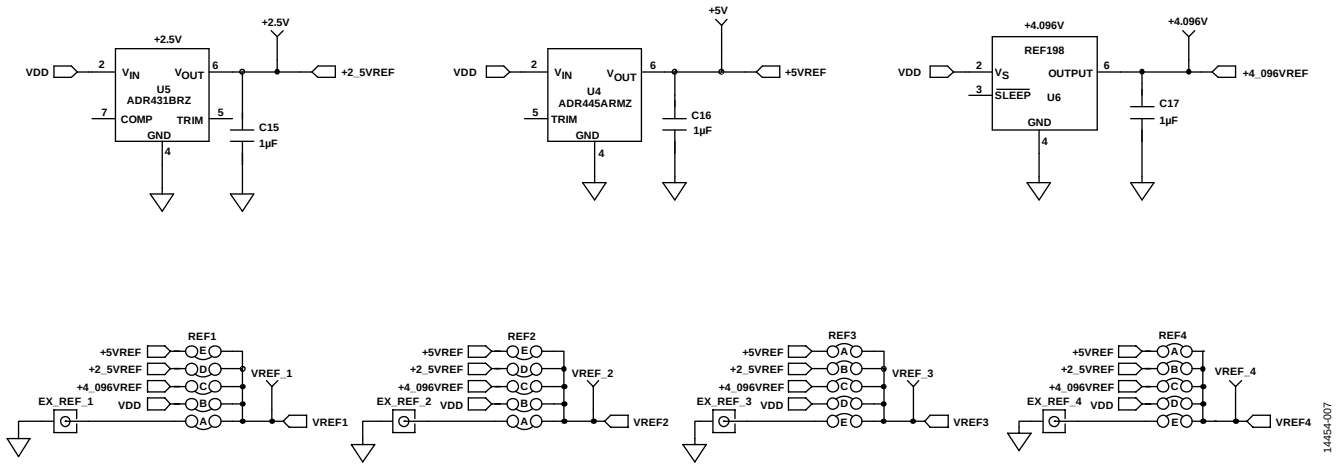

Figure 7. EVAL-MBnanoDAC-SDZ Motherboard Reference Voltage Selector Circuit

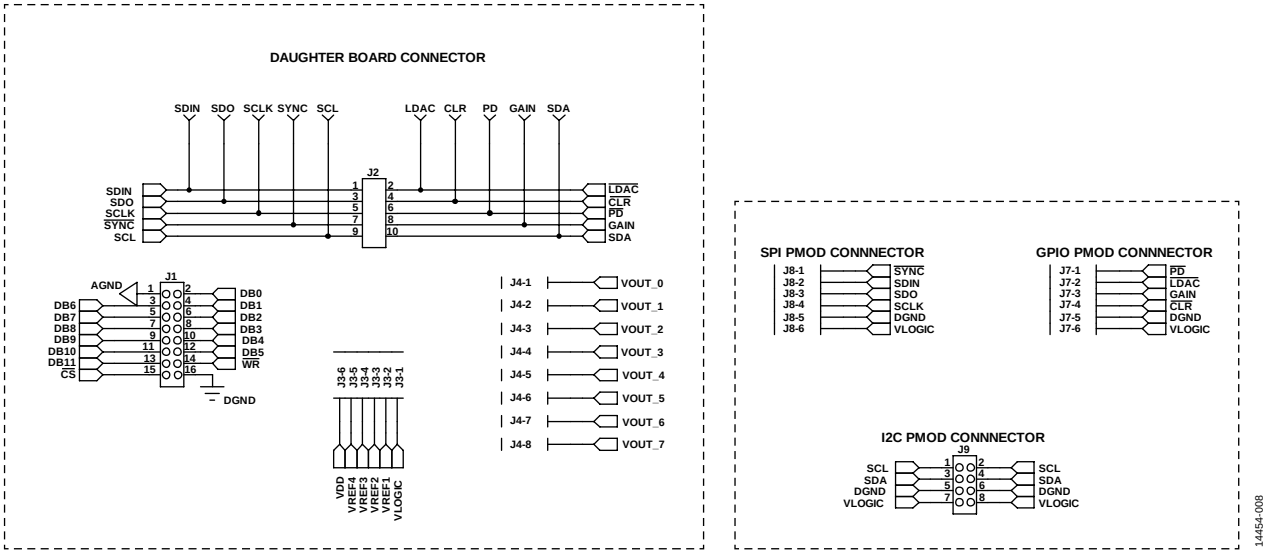

Figure 8. EVAL-MBnanoDAC-SDZ Motherboard Connectors to Daughter Board and Serial Interface

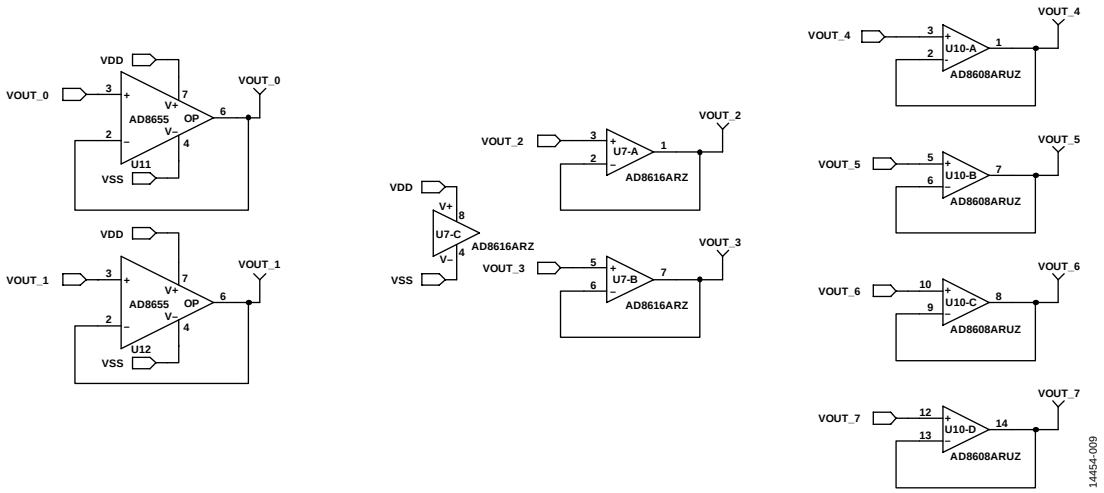

Figure 9. EVAL-MBnanoDAC-SDZ Motherboard Output Amplifier Circuit

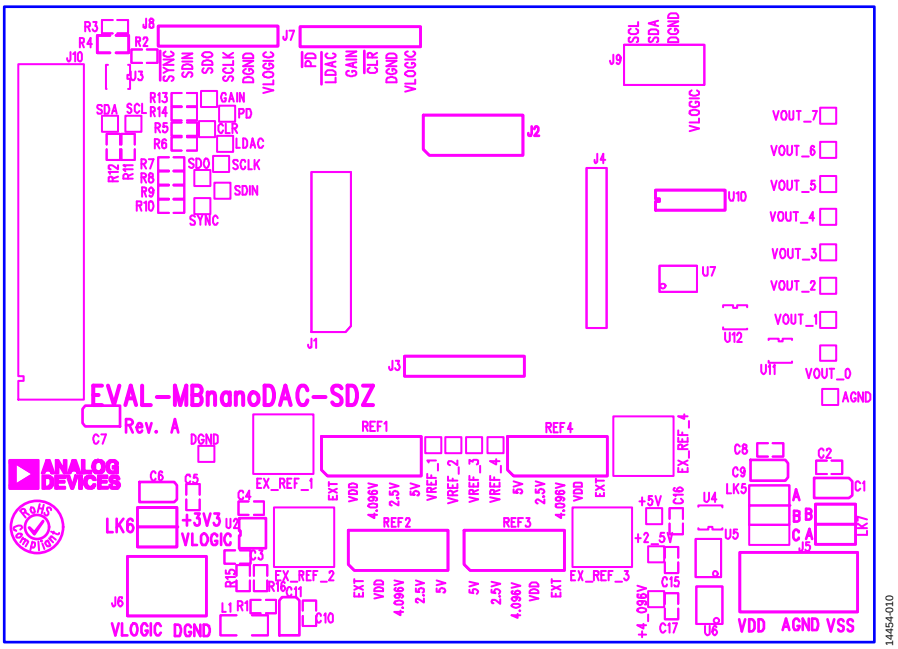

Figure 10. EVAL-MBnanoDAC-SDZ Motherboard Component Placement

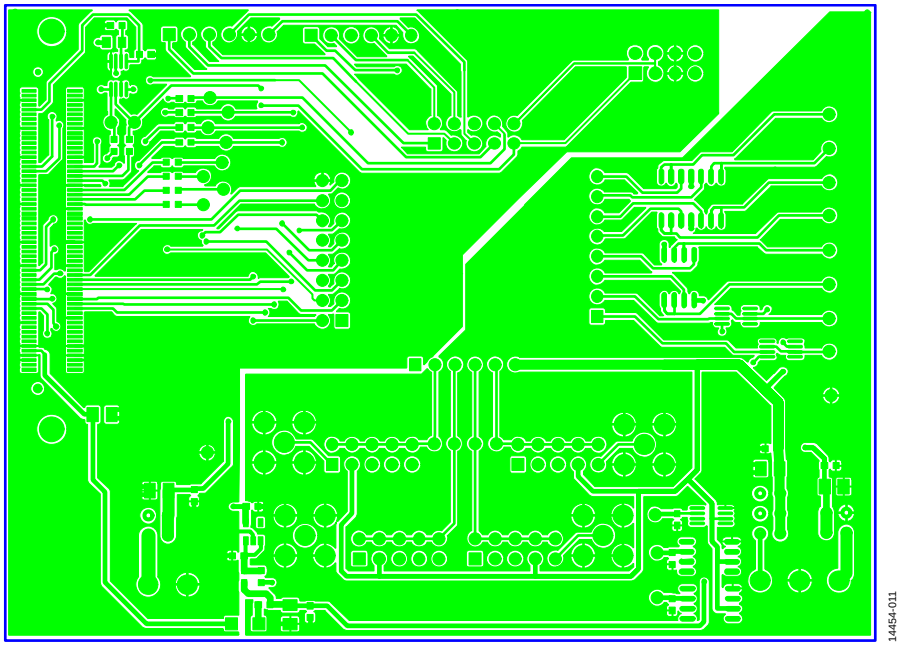

Figure 11. EVAL-MBnanoDAC-SDZ Motherboard Top Side Routing

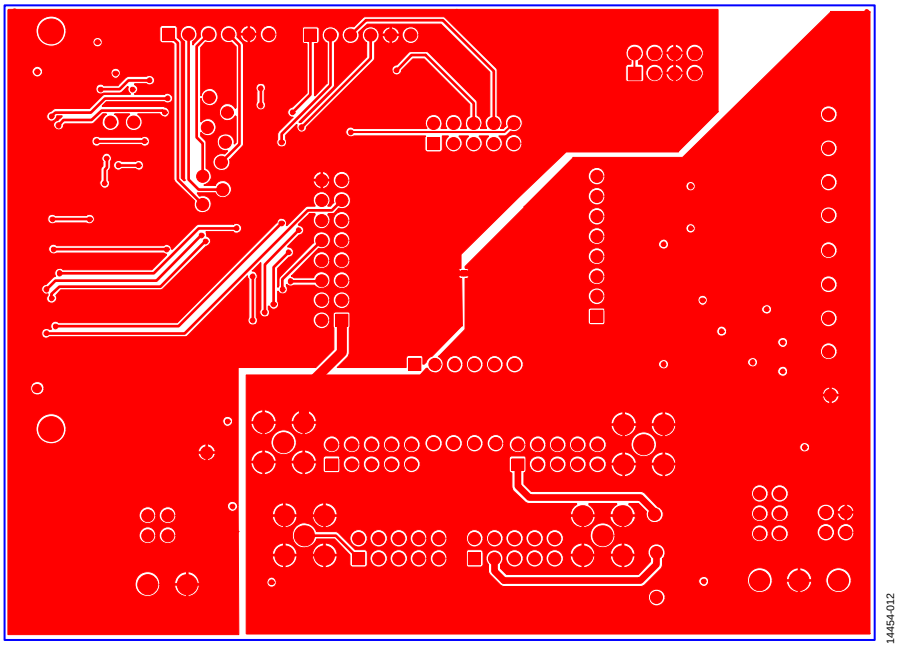

Figure 12. EVAL-MBnanoDAC-SDZ Motherboard Bottom Side Routing

EVAL-AD5324DBZ DAUGHTER BOARD

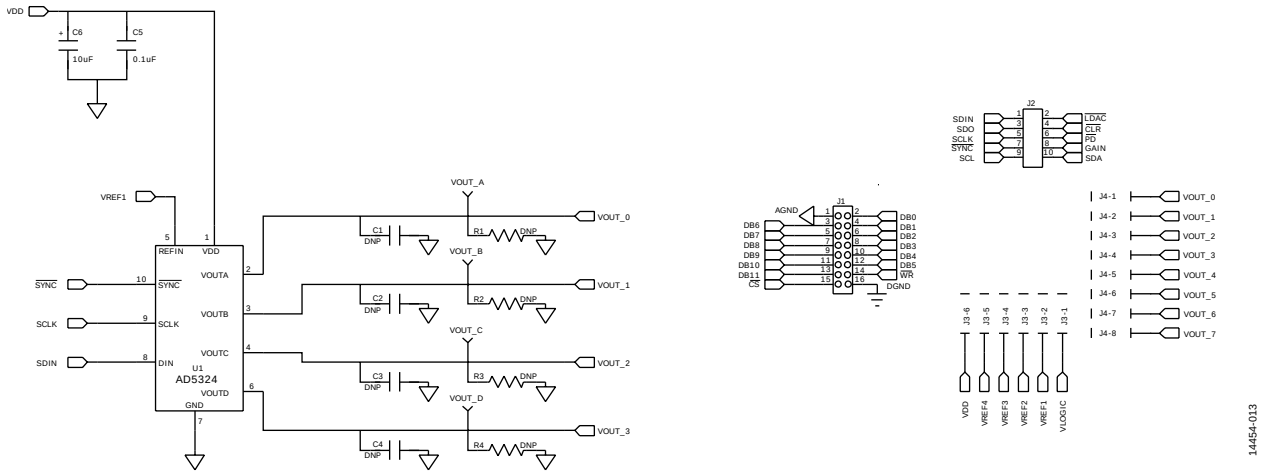

Figure 13. EVAL-AD5324DBZ Daughter Board Schematics

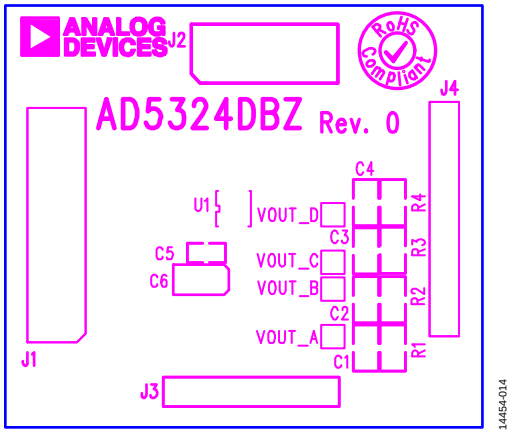

Figure 14. EVAL-AD5324DBZ Daughter Board Component Placement

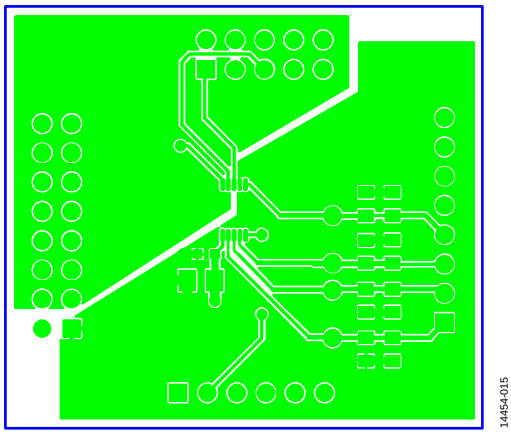

Figure 15. EVAL-AD5324DBZ Daughter Board Top Side Routing

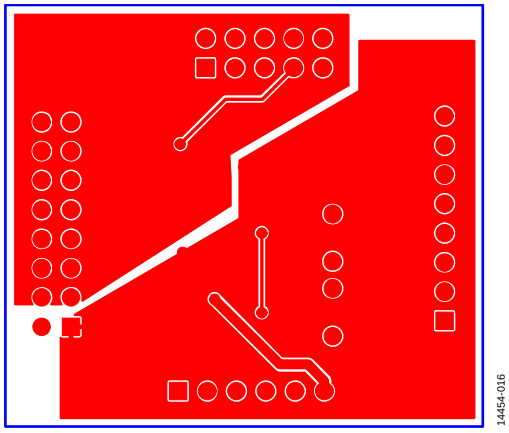

Figure 16. EVAL-AD5324DBZ Daughter Board Bottom Side Routing

ORDERING INFORMATION

BILL OF MATERIALS

Table 4. EVAL-MBnanoDAC-SDZ Motherboard

Reference Designator	Description	Supplier[1]/Part Number
C1, C6, C7, C9	6.3 V tantalum capacitors (Case A), 10 µF, ±20%	FEC 1190107
C2,C5,C8,C10, C15 to 17	50 V, X7R ceramic capacitors, 0.1 µF, ±10%	FEC 1759122
C3, C4	10 V, X5R ceramic capacitors, 1 µF, ±10%	GRM188R61A105KA61D[2]
C11	6.3 V tantalum capacitor (Case A), 4.7µF, ±20%	FEC 1432350
EXT_REF_1 to EXT_REF_4	Straight PCB mount SMB jacks, 50 Ω	FEC 1206013
J1	Header, 2.54 mm, 2 × 8-way	FEC 2308428
J2	Header, 2.54 mm, 2 × 5-way	FEC 9689583
J3, J7, J8	Headers, 2.54 mm, 1 × 6-way	FEC 9689508
J4	Header, 2.54 mm, 1 × 8-way	FEC 1766172
J5	3-pin terminal block	FEC 1667472
J6	2-pin terminal block	FEC 151789
J9	Header, 2.54 mm, 2 × 4-way	FEC 1667509
J10	120-way connector	FEC 1324660
L1	Inductor, SMD, 600 Ω	FEC 9526862
LK5	6-pin (3 × 2-way) 0.1" header and shorting block	FEC 148-535 and FEC 150-411 (36-pin strip)
LK6, LK7	4-pin (2 × 2-way) 0.1" header and shorting blocks	FEC 148-535 and FEC 150-411 (36-pin strip)
REF1 to REF 4	10-pin (5 × 2-way) 0.1" header and shorting blocks	FEC 1022227 and FEC 150-411
R1	Resistor, surge, 1.6 Ω, 1%, 0603	FEC 1627674
R2, R3	SMD resistors, 100 kΩ, 1%, 0603	FEC 9330402
R5 to R15	SMD resistors, 100 Ω, 1%, 0603	FEC 9330364
U2	3.3 V linear regulator	ADP121-AUJZ33R7
U3	32 kΩ I^2C serial EEPROM	FEC 1331330
U4	5 V reference MSOP	ADR445ARMZ
U5	Ultralow noise XFET® voltage reference	ADR431BRZ
U6	4.096V reference	REF198ESZ
U7	Dual op amp	AD8616ARZ
U10	Quad op amp	AD8608ARMZ
U11, U12	Op amp	AD8655ARMZ

[1] FEC refers to Farnell Electronic Component Distributors.
[2] GRM refers to Murata Manufacturing Company.

EVAL-AD5324DBZ Daughter Board

Reference Designator	Description	Supplier[1]/Part Number
C1	Not inserted	Not applicable
C2	Not inserted	Not applicable
C3	Not inserted	Not applicable
C4	Not inserted	Not applicable
C5	50 V X7R ceramic capacitor	FEC 1759122
C6	6.3 V tantalum capacitor (Case A)	FEC 1190107
J1	16-pin (2 × 8-way) header, inserted from solder side	FEC 2308428
J2	10-pin (2 × 5-way) straight header, 2.54 mm pitch, inserted from solder side	FEC 9689583
J3	6-pin (1 × 6-way) straight header, 2.54 mm pitch, inserted from solder side	FEC 9689508
J4	Header, 2.54 mm, PCB, 1 × 8-way, inserted from solder side	FEC 1766172
R1	Not inserted	Not applicable
R2	Not inserted	Not applicable
R3	Not inserted	Not applicable
R4	Not inserted	Not applicable
U1	12-bit DAC	AD5324BRMZ
VOUT_A	Red test point, do not insert	Not applicable
VOUT_B	Red test point, do not insert	Not applicable
VOUT_C	Red test point, do not insert	Not applicable
VOUT_D	Red test point, do not insert	Not applicable

[1] FEC refers to Farnell Electronic Component Distributors.

I^2C refers to a communications protocol originally developed by Phillips Semiconductors (now NXP Semiconductors).

ESD Caution

ESD (electrostatic discharge) sensitive device. Charged devices and circuit boards can discharge without detection. Although this product features patented or proprietary protection circuitry, damage may occur on devices subjected to high energy ESD. Therefore, proper ESD precautions should be taken to avoid performance degradation or loss of functionality.

UG14454-0-3/17(0)

www.analog.com