PART NUMBER	ITEM ① BODY	ITEM ② CONTACT	ITEM ③ INTERFACE	ITEM ④ INSULATOR	ITEM ⑤ SLEEVE	ITEM ⑥ COVER RING	ITEM ⑦ END CAP
131-1402-1D1	ZINC GOLD PL .00001 MIN OVER NICKEL PL .DDD15 MIN OVER COPPER PL .0005 MIN	BERYLLIUM COPPER GOLD PL .00003 MIN OVER NICKEL PL .00005 MIN OVER COPPER PL .00005 MIN	BERYLLIUM COPPER GOLD PL .00003 MIN OVER NICKEL PL .00005 MIN OVER COPPER PL .00005 MIN	TEFLON	COPPER GOLD PL .DDD01 MIN OVER NICKEL PL .00005 MIN OVER COPPER PL .00005 MIN	PHOSPHOR BRONZE GOLD PL .DDDD1 MIN OVER NICKEL PL .00005 MIN OVER COPPER PL .0005 MIN	BRASS GOLD PL .00001 MIN OVER NICKEL PL .00005 MIN OVER COPPER PL .0005 MIN
131-1402-1D6	ZINC NICKEL PL .DD015 MIN OVER COPPER PL .0005 MIN	BERYLLIUM COPPER GOLD PL .00003 MIN OVER NICKEL PL .00005 MIN OVER COPPER PL .00005 MIN	BERYLLIUM COPPER GOLD PL .00003 MIN OVER NICKEL PL .00005 MIN OVER COPPER PL .00005 MIN	TEFLON	COPPER NICKEL PL .0001 MIN OVER COPPER PL .00005 MIN	PHOSPHOR BRONZE NICKEL PL .0001 MIN OVER COPPER PL .0005 MIN	BRASS NICKEL PL .0001 MIN OVER COPPER PL .0005 MIN
131-1402-116	ZINC NICKEL PL .DD015 MIN OVER COPPER PL .0005 MIN	BERYLLIUM COPPER GOLD PL .00003 MIN OVER NICKEL PL .00005 MIN OVER COPPER PL .00005 MIN	BERYLLIUM COPPER NICKEL PL .0001 MIN OVER COPPER PL .00005 MIN	TEFLON	COPPER NICKEL PL .0001 MIN OVER COPPER PL .00005 MIN	PHOSPHOR BRONZE NICKEL PL .0001 MIN OVER COPPER PL .0005 MIN	BRASS NICKEL PL .0001 MIN OVER COPPER PL .0005 MIN

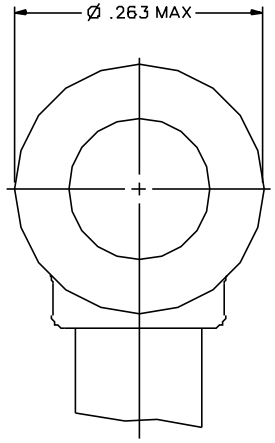

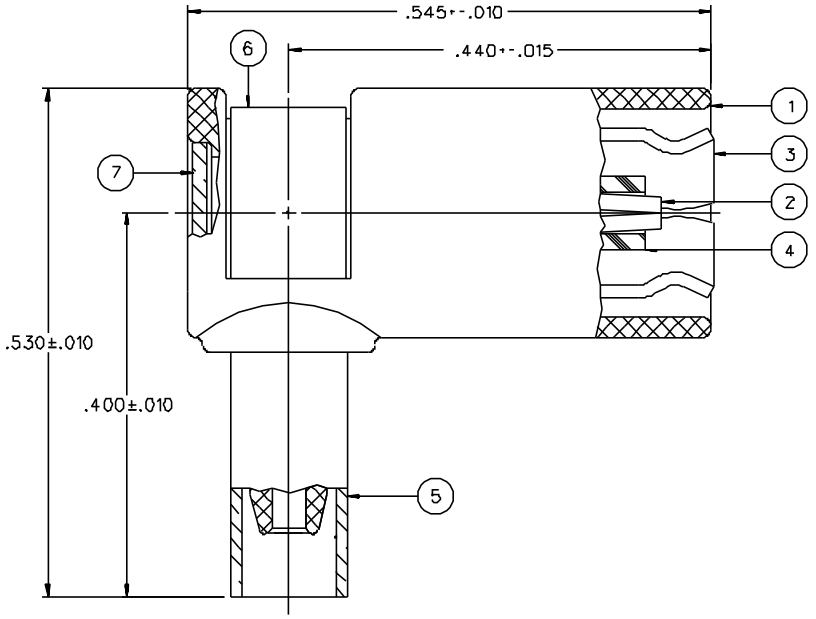

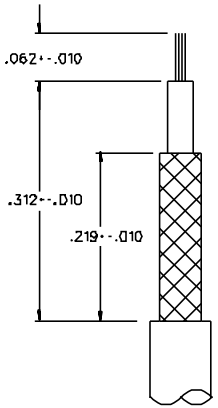

CABLE STRIP DIMENSIONS

NOTES:

1. SPECIFICATIONS:

IMPEDANCE: 50 OHMS
FREQUENCY RANGE: 0-4 GHZ
VSWR: 1.45-.06 F (F IN GHZ)
WORKING VOLTAGE: 250 VRMS MAX AT SEA LEVEL
DIELECTRIC WITHSTANDING VOLTAGE: 750 VRMS MIN AT SEA LEVEL
INSULATION RESISTANCE: 1000 MEGOHM MIN
CONTACT RESISTANCE:
CENTER CONTACT - INITIAL 12 MILLIOHM MAX,
AFTER ENVIRONMENTAL 16 MILLIOHM MAX
OUTER CONDUCTOR - GOLD PLATED INITIAL 1 MILLIOHM MAX,
AFTER ENVIRONMENTAL 1.5 MILLIOHM MAX
NICKEL PLATED INITIAL 2.5 MILLIOHM MAX,
AFTER ENVIRONMENTAL 3.5 MILLIOHM MAX
BRAID TO BODY - GOLD PLATED INITIAL 1 MILLIOHM MAX,
AFTER ENVIRONMENTAL NOT APPLICABLE
NICKEL PLATED INITIAL 2.5 MILLIOHM MAX.
AFTER ENVIRONMENTAL NOT APPLICABLE
CORONA LEVEL: 185 VOLTS MIN AT 70,000 FEET
INSERTION LOSS: .60 dB MAX AT 1.5 GHZ
RF LEAKAGE: -55 dB MIN AT 2.5 GHZ
RF HIGH POTENTIAL WITHSTANDING VOLTAGE: 500 VRMS MIN AT 4 AND 7 MHZ

MECHANICAL:

ENGAGE/DISENGAGE FORCE: INITIAL 14 LBS MAX, AFTER DURABILITY 14 LBS MAX
ENGAGEMENT/2 LBS MIN DISENGAGEMENT
MATING TORQUE: NOT APPLICABLE
COUPLING PROOF TORQUE: NOT APPLICABLE
COUPLING NUT RETENTION: NOT APPLICABLE
CONTACT RETENTION: 4 LBS MIN AXIAL FORCE
CABLE ACCEPTABILITY: RG 178/U, RG 196/U

CABLE HEX CRIMP SIZE: .1D5
CABLE RETENSION: 10 LBS MIN OR CABLE BREAKING STRENGTH
DURABILITY: 500 CYCLES MIN

ENVIRONMENTAL:

(MEETS OR EXCEEDS THE APPLICABLE PARAGRAPH OF MIL-C-39012)
THERMAL SHOCK: MIL-STD-202, METHOD 107, CONDITION B
OPERATING TEMPERATURE: -65 DEG C TO 165 DEG C
CORROSION: MIL-STD-202, METHOD 101, CONDITION B
SHOCK: MIL-STD-202, METHOD 213, CONDITION B
VIBRATION: MIL-STD-202, METHOD 204, CONDITION B

DRAWING NO.
C - 131-1402-101/120

REVISIONS				
ENGINEERING RELEASE				
5	8-3-90	EJ / RJB / AW	8-7-90	ECO 24802

CHANGED: RF LEAK 2.5 GHZ WAS 2 TO 3 GHZ, RF HIGH POT 4 AND 7 MHZ WAS 5

* REVISION NUMBER FOLLOWED BY AN ALPHA * CHARACTER INDICATES DRAWING CLARIFI- * CATION OR PART NUMBER ADDITION ONLY. *

5a	4-22-94	RH / JRK	TAK / RJB	5-10-94	ECN 42367
VERSION UPDATE					
6	5-18-95	RH / TAK	RJB		ECN 43336

CUSTOMER DRAWING

THIS DRAWING TO BE INTERPRETED PER ANSIY 14.5M - 1982

"μSTATION"

COMPANY CONFIDENTIAL

TOLERANCE UNLESS OTHERWISE SPECIFIED		DRAWN BY	DATE
DECIMALS	mm	EJ	8-3-90
.XX ———	———	CHECKED BY	DATE
.XXX ———	———		
MATL ———		APPROVED BY RJB	DATE 8-6-90
FINISH ———		APPROVED BY	DATE
		RELEASE DATE	8-7-90

JOHNSON (a cinch connectivity solutions brand)
Cinch Connectivity Solutions
299 Johnson Ave. Ste. 100
Waseca, MN 56093
1-800-247-8256

TITLE: PLUG ASSEMBLY
RA CABLED
SMB, 50 OHM, RG 178

CODE NO. | DRAWING NO. C - 131-1402-101/120

SCALE 10:1 | U/M INCH | SHEET 2 OF 2