ISL85005DEMO1Z, ISL85005ADEMO1Z

Demonstration Boards User Guide

UG110
Rev.0.00
Feb 6, 2017

Description

The ISL85005 and ISL85005A are 4.5V to 18V input, 5A synchronous buck regulators for applications with input voltage from multi-cell batteries or regulated 5V and 12V power rails. These devices also provide an integrated bootstrap diode for the high-side gate driver to reduce the external parts count. The ISL85005DEMO1Z and ISL85005ADEMO1Z platforms allow quick demonstration of the high performance features of the ISL85005 and ISL85005A buck regulators.

Specifications

These boards have been configured and optimized for the following operating conditions:

- Input voltage ranges from 7V to 15V
- 5V nominal output voltage
- Up to 5A output current capability
- Default internally set 500kHz switching frequency
- Default internally set 2.3ms soft-start
- Operating temperature range: -40°C to +85°C

Key Features

- Switch selectable EN (enabled/disabled)
- Selectable mode (DEM/Forced CCM) (ISL85005DEMO1Z)
- Internal and external compensation options
- Frequency synchronization option (ISL85005DEMO1Z)
- Adjustable soft-start option (ISL85005ADEMO1Z)
- Small and compact design

Related Literature

- For a full list of related documents please visit our website
  - ISL85005 and ISL85005A product pages

Ordering Information

PART NUMBER	DESCRIPTION
ISL85005DEMO1Z	Small form-factor demonstration board for ISL85005FRZ
ISL85005ADEMO1Z	Small form-factor demonstration board for ISL85005AFRZ

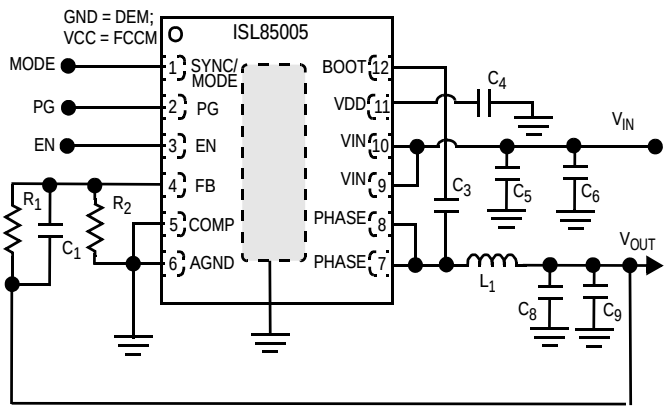

FIGURE 1A. ISL85005DEMO1Z

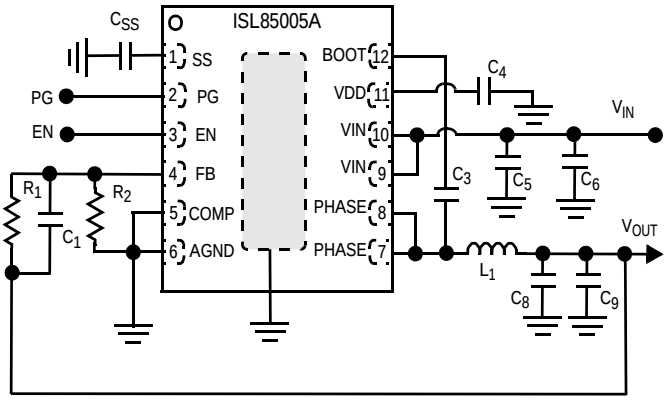

FIGURE 1B. ISL85005ADEMO1Z

FIGURE 1. BLOCK DIAGRAM

Connector and Selection Jumper Descriptions

The ISL85005DEMO1Z and ISL85005ADEMO1Z demonstration boards include I/O connectors and a selection jumper as shown in Table 1.

TABLE 1. CONNECTORS AND JUMPER

REFERENCE DESIGNATOR	DESCRIPTION
J1	Selection Jumper for Enable (EN)
J3	Input voltage positive connection
J4	Input voltage return connection
J5	Output voltage positive connection
J6	Output voltage return connection

Quick Setup Guide

Refer to the following Quick Setup Guide to configure and power-up the board for proper operation.

1. Set the power supply voltage to 12V, and turn off the power supply. Connect the positive output of power supply to J3 (VIN) and the negative output to J4 (GND).
2. Connect an electronic load to J5 (VOUT) for the positive connection and J6 (GND) for the negative connection.
3. Measure the output voltage (J5 and J6) with the voltmeter.
4. Place scope probes on VOUT and other test points of interest.
5. Set EN jumper (J1) to ON position.
6. Set the load current to be 0.1A and turn on the power supply, the output voltage should be in regulation with a nominal 5V output.
7. Slowly increase the load up to 5A while monitoring the output voltage which should remain in regulation with a nominal 5V output.
8. Slowly sweep VIN from 7V to 15V, the output voltage should remain in regulation with a nominal 5V output.
9. Decrease the input voltage to 0V to shut down the regulator.

Operation Mode Selection (ISL85005DEMO1Z)

The ISL85005DEMO1Z can be configured in either forced Continuous Conduction Mode (CCM) or Diode Emulation Mode (DEM):

- In the default configuration of ISL85005DEMO1Z, SYNC/MODE (Pin 1) of ISL85005 is floating, the ISL85005 operates in forced CCM.
- To configure the ISL85005 in DEM, short the SYNC/MODE pin to GND by populating a 0Ω resistor for C_{SS}. DEM enables automatic transition from CCM to DCM and higher efficiency at light-load conditions.

Frequency Synchronization (ISL85005DEMO1Z)

The ISL85005 can be synchronized to an external clock with frequency ranges from 300kHz to 2MHz by applying the external clock to the SYNC/MODE pin on the ISL85005DEMO1Z demonstration board. The external clock should meet the specifications of the pulse width and voltage level described in the datasheet.

Adjusting Soft-Start Time (ISL85005ADEMO1Z)

With the SS pin floating, the ISL85005A features an internally set 2.3ms of soft-start time. The soft-start time can be set to a desired value by connecting an external capacitor (C_{SS} on the ISL85005ADEMO1Z demonstration board) between the SS pin and AGND. The capacitance can be calculated by Equation 1:

$$C_{SS}[nF] = 3.5 \cdot t_{SS}[ms] - 1.6nF \quad \text{(EQ. 1)}$$

Evaluating Other Output Voltages

Both ISL85005DEMO1Z and ISL85005ADEMO1Z have a nominal 5V output voltage. The output voltages are programmable by an external resistor divider formed by R_1 and R_2 as shown in Figure 1 on page 1. R_1 is usually chosen first, then the value for R_2 can be calculated based on R_1 and the desired output voltage using Equation 2.

$$R_2 = \frac{R_1 \cdot 0.8V}{V_{OUT} - 0.8V} \quad \text{(EQ. 2)}$$

PCB Layout Considerations

The PCB layout is critical for proper operation of the ISL85005 and ISL85005A. The following guidelines should be followed to achieve good performance.

1. Use a multilayer PCB structure to achieve optimized performance, a four-layer PCB is recommended for this design.
2. Use a combination of bulk capacitors and smaller ceramic capacitors with lower ESL for the input capacitors and place them as close to the IC as possible.
3. Place the VDD decoupling capacitor close to the IC between VDD and GND. A 1µF ceramic capacitor is typically used.
4. Place a bootstrap capacitor close to the IC between the BOOT and PHASE pins. A 0.1µF ceramic capacitor is typically used.
5. Connect the feedback resistor divider between the output capacitor positive terminal and the AGND pin of the IC, and place the resistors close to the FB pin of the IC.
6. Connect the EPAD of the IC to the GND planes underneath using multiple thermal vias to improve thermal performance.

ISL85005xDEMO1Z Demonstration Board

FIGURE 2. TOP VIEW

Schematic

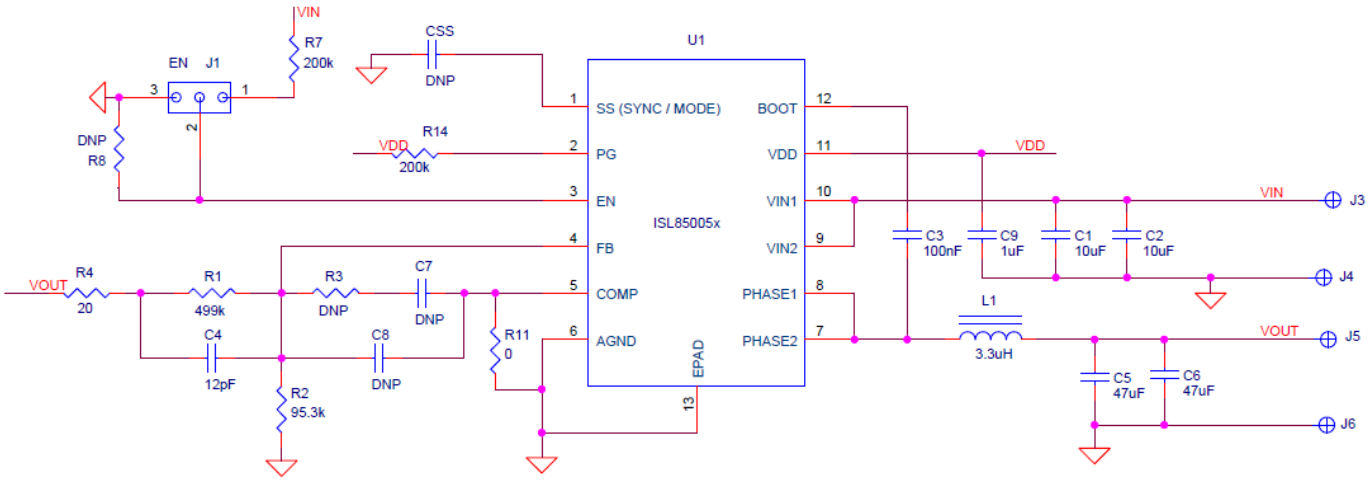

FIGURE 3. ISL85005xDEMO1Z SCHEMATIC

Bill of Materials

MANUFACTURER PART NUMBER	REFERENCE DESIGNATOR	QTY	DESCRIPTION	MANUFACTURER
ISL85005FRZ (ISL85005DEMO1Z)	U1	1	IC-BUCK REGULATOR W/ SYNC/MODE PIN, 12PIN, DFN, 3x4, ROHS	INTERSIL
ISL85005AFRZ (ISL85005ADEMO1Z)		1	IC-BUCK REGULATOR W/ SS PIN, 12PIN, DFN, 3x4, ROHS	INTERSIL
GRM1555C1H120JA01D	C4	1	CAP, SMD, 0402, 12pF, 50V, 5%, NP0, ROHS	MURATA
	C7, C8, C_{SS}	0	CAP, SMD, 0402, DNP-PLACE HOLDER, ROHS	
GRM188R71E104KA01D	C3	1	CAP, SMD, 0603, 0.1µF, 25V, 10%, X7R, ROHS	MURATA
GRM188R61E105KA12D	C9	1	CAP, SMD, 0603, 1µF, 25V, 10%, X5R, ROHS	MURATA
C1206X7R250-106KNE	C1, C2	2	CAP, SMD, 1206, 10µF, 25V, 10%, X7R, ROHS	VENKEL
CL32A476KOJNNNE	C5, C6	2	CAP, SMD, 1210, 47µF, 16V, 10%, X5R, ROHS	SAMSUNG
744314330	L1	1	COIL-PWR INDUCTOR, SMD, 6.9mm^2, 3.3µH, 9A 9mΩ, WW, ROHS	WURTH ELEKTRONIK
1514-2	J3, J4, J5, J6	4	CONN-TURRET, TERMINAL POST, TH, ROHS	KEYSTONE
ERJ2RKF20R0	R4	1	RES, SMD, 0402, 20Ω, 1/16W, 1%, TF, ROHS	PANASONIC
CR0402-16W-00T	R11	1	RES, SMD, 0402, 0Ω, 1/16W, 5%, TF, ROHS	VENKEL
MCR01MZPF2003	R7, R14	2	RES, SMD, 0402, 200k, 1/16W, 1%, TF, ROHS	ROHM
CR0402-16W-4993FT	R1	1	RES, SMD, 0402, 499k, 1/16W, 1%, TF, ROHS	VENKEL
RC0402FR-0795K3L	R2	1	RES, SMD, 0402, 95.3k, 1/16W, 1%, TF, ROHS	YAGEO
	R3, R8	0	RES, SMD, 0402, DNP, DNP, DNP, TF, ROHS	
929950-00	Jumper	1	CONN-JUMPER, SHORTING, 2PIN, BLK, OPEN TOP, 2.54mmPITCH, ROHS	3M
PEC03SAAN	J1	1	3 Positions Header, 100 mil (2.54mm) spacing, Through Hole Tin	Sullins Connector Solutions
ISL85005xDEMO1Z	PCB	1	PWB-PCB, ISL85005xDEMO1Z, REVA, ROHS	Any

ISL85005xDEMO1Z PCB Layout

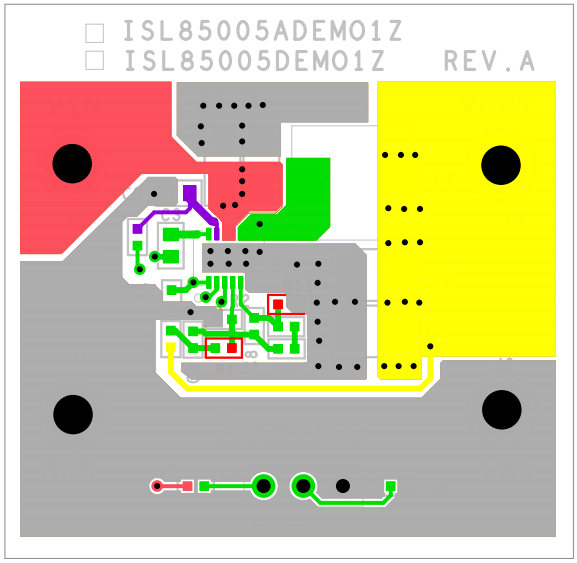

FIGURE 4. TOP LAYER

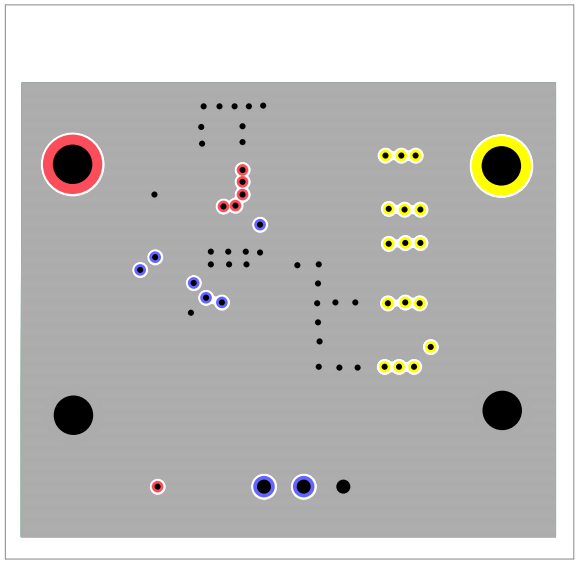

FIGURE 5. LAYER 2

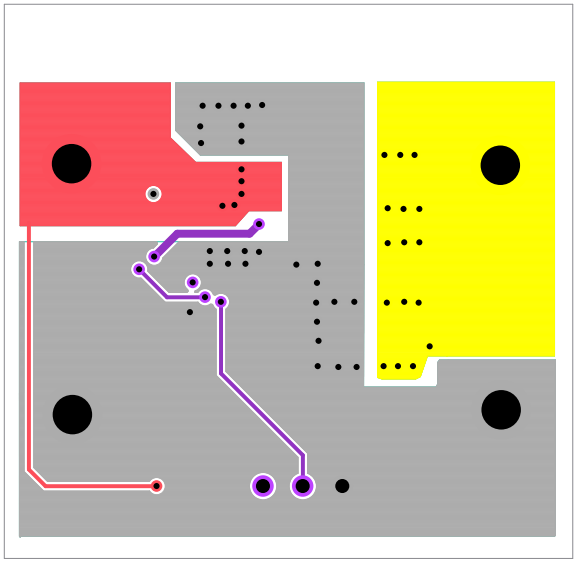

FIGURE 6. LAYER 3

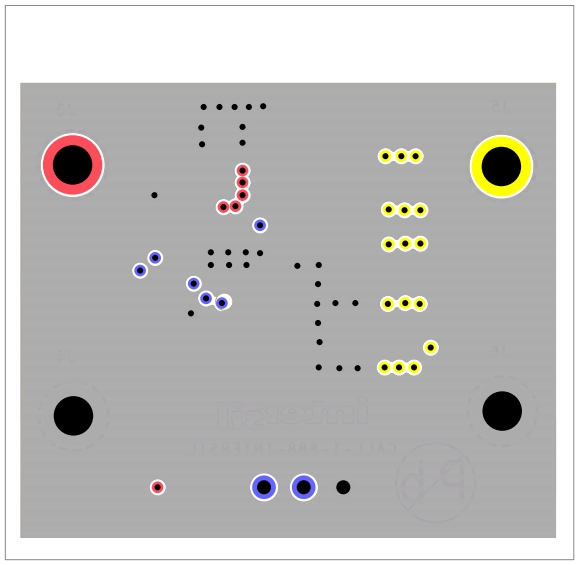

FIGURE 7. BOTTOM LAYER

Typical Performance Curves

V_{IN} = 12V, V_{OUT} = 5V, L = 3.3µH, f_{SW} = 500kHz, T_A = +25°C, unless otherwise noted.

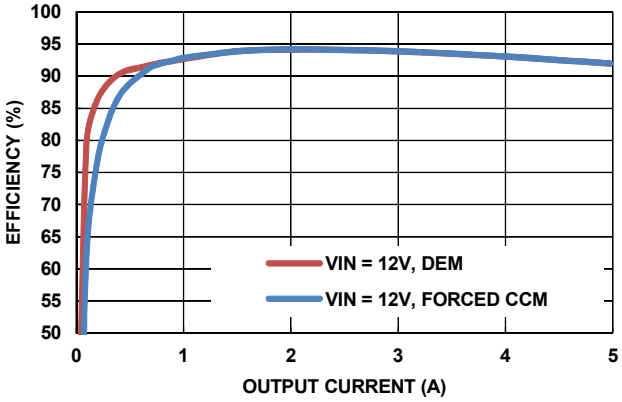

FIGURE 8. EFFICIENCY vs LOAD

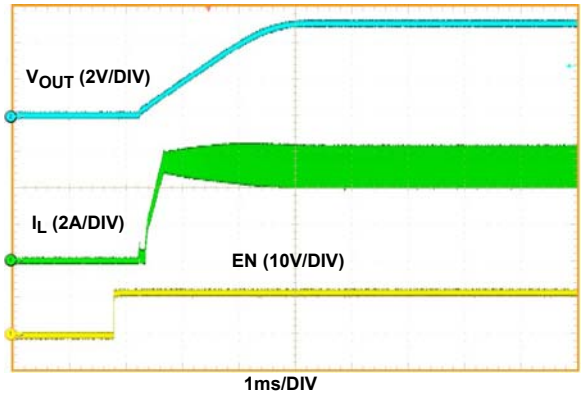

FIGURE 9. START-UP WITH EN, I_{OUT} = 5A

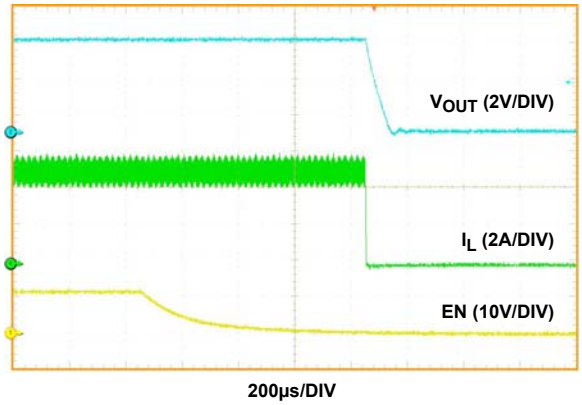

FIGURE 10. SHUTDOWN WITH EN, I_{OUT} = 5A

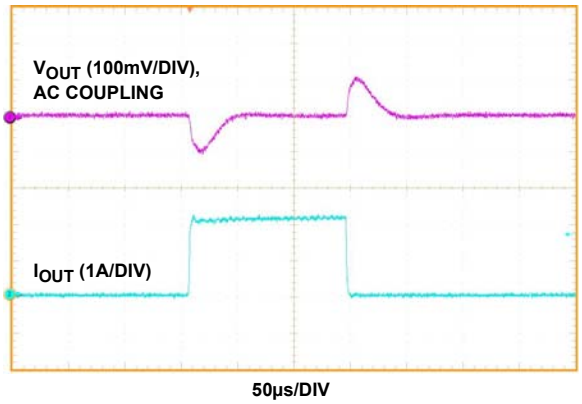

FIGURE 11. LOAD TRANSIENT, 0A → 2.5A → 0A, 2.5A/µs

Notice

1. Descriptions of circuits, software and other related information in this document are provided only to illustrate the operation of semiconductor products and application examples. You are fully responsible for the incorporation or any other use of the circuits, software, and information in the design of your product or system. Renesas Electronics disclaims any and all liability for any losses and damages incurred by you or third parties arising from the use of these circuits, software, or information.
2. Renesas Electronics hereby expressly disclaims any warranties against and liability for infringement or any other claims involving patents, copyrights, or other intellectual property rights of third parties, by or arising from the use of Renesas Electronics products or technical information described in this document, including but not limited to, the product data, drawings, charts, programs, algorithms, and application examples.
3. No license, express, implied or otherwise, is granted hereby under any patents, copyrights or other intellectual property rights of Renesas Electronics or others.
4. You shall not alter, modify, copy, or reverse engineer any Renesas Electronics product, whether in whole or in part. Renesas Electronics disclaims any and all liability for any losses or damages incurred by you or third parties arising from such alteration, modification, copying or reverse engineering.
5. Renesas Electronics products are classified according to the following two quality grades: “Standard” and “High Quality”. The intended applications for each Renesas Electronics product depends on the product’s quality grade, as indicated below.
   "Standard": Computers; office equipment; communications equipment; test and measurement equipment; audio and visual equipment; home electronic appliances; machine tools; personal electronic equipment; industrial robots; etc.
   "High Quality": Transportation equipment (automobiles, trains, ships, etc.); traffic control (traffic lights); large-scale communication equipment; key financial terminal systems; safety control equipment; etc.
   Unless expressly designated as a high reliability product or a product for harsh environments in a Renesas Electronics data sheet or other Renesas Electronics document, Renesas Electronics products are not intended or authorized for use in products or systems that may pose a direct threat to human life or bodily injury (artificial life support devices or systems; surgical implantations; etc.), or may cause serious property damage (space system; undersea repeaters; nuclear power control systems; aircraft control systems; key plant systems; military equipment; etc.). Renesas Electronics disclaims any and all liability for any damages or losses incurred by you or any third parties arising from the use of any Renesas Electronics product that is inconsistent with any Renesas Electronics data sheet, user’s manual or other Renesas Electronics document.
6. When using Renesas Electronics products, refer to the latest product information (data sheets, user’s manuals, application notes, “General Notes for Handling and Using Semiconductor Devices” in the reliability handbook, etc.), and ensure that usage conditions are within the ranges specified by Renesas Electronics with respect to maximum ratings, operating power supply voltage range, heat dissipation characteristics, installation, etc. Renesas Electronics disclaims any and all liability for any malfunctions, failure or accident arising out of the use of Renesas Electronics products outside of such specified ranges.
7. Although Renesas Electronics endeavors to improve the quality and reliability of Renesas Electronics products, semiconductor products have specific characteristics, such as the occurrence of failure at a certain rate and malfunctions under certain use conditions. Unless designated as a high reliability product or a product for harsh environments in a Renesas Electronics data sheet or other Renesas Electronics document, Renesas Electronics products are not subject to radiation resistance design. You are responsible for implementing safety measures to guard against the possibility of bodily injury, injury or damage caused by fire, and/or danger to the public in the event of a failure or malfunction of Renesas Electronics products, such as safety design for hardware and software, including but not limited to redundancy, fire control and malfunction prevention, appropriate treatment for aging degradation or any other appropriate measures. Because the evaluation of microcomputer software alone is very difficult and impractical, you are responsible for evaluating the safety of the final products or systems manufactured by you.
8. Please contact a Renesas Electronics sales office for details as to environmental matters such as the environmental compatibility of each Renesas Electronics product. You are responsible for carefully and sufficiently investigating applicable laws and regulations that regulate the inclusion or use of controlled substances, including without limitation, the EU RoHS Directive, and using Renesas Electronics products in compliance with all these applicable laws and regulations. Renesas Electronics disclaims any and all liability for damages or losses occurring as a result of your noncompliance with applicable laws and regulations.
9. Renesas Electronics products and technologies shall not be used for or incorporated into any products or systems whose manufacture, use, or sale is prohibited under any applicable domestic or foreign laws or regulations. You shall comply with any applicable export control laws and regulations promulgated and administered by the governments of any countries asserting jurisdiction over the parties or transactions.
10. It is the responsibility of the buyer or distributor of Renesas Electronics products, or any other party who distributes, disposes of, or otherwise sells or transfers the product to a third party, to notify such third party in advance of the contents and conditions set forth in this document.
11. This document shall not be reprinted, reproduced or duplicated in any form, in whole or in part, without prior written consent of Renesas Electronics.
12. Please contact a Renesas Electronics sales office if you have any questions regarding the information contained in this document or Renesas Electronics products.

(Note 1) “Renesas Electronics” as used in this document means Renesas Electronics Corporation and also includes its directly or indirectly controlled subsidiaries.

(Note 2) “Renesas Electronics product(s)” means any product developed or manufactured by or for Renesas Electronics.

(Rev.4.0-1 November 2017)

SALES OFFICES Renesas Electronics Corporation http://www.renesas.com

Refer to "http://www.renesas.com/" for the latest and detailed information.

Renesas Electronics America Inc.
1001 Murphy Ranch Road, Milpitas, CA 95035, U.S.A.
Tel: +1-408-432-8888, Fax: +1-408-434-5351

Renesas Electronics Canada Limited
9251 Yonge Street, Suite 8309 Richmond Hill, Ontario Canada L4C 9T3
Tel: +1-905-237-2004

Renesas Electronics Europe Limited
Dukes Meadow, Millboard Road, Bourne End, Buckinghamshire, SL8 5FH, U.K
Tel: +44-1628-651-700, Fax: +44-1628-651-804

Renesas Electronics Europe GmbH
Arcadiastrasse 10, 40472 Düsseldorf, Germany
Tel: +49-211-6503-0, Fax: +49-211-6503-1327

Renesas Electronics (China) Co., Ltd.
Room 1709 Quantum Plaza, No.27 ZhichunLu, Haidian District, Beijing, 100191 P. R. China
Tel: +86-10-8235-1155, Fax: +86-10-8235-7679

Renesas Electronics (Shanghai) Co., Ltd.
Unit 301, Tower A, Central Towers, 555 Langao Road, Putuo District, Shanghai, 200333 P. R. China
Tel: +86-21-2226-0888, Fax: +86-21-2226-0999

Renesas Electronics Hong Kong Limited
Unit 1601-1611, 16/F., Tower 2, Grand Century Place, 193 Prince Edward Road West, Mongkok, Kowloon, Hong Kong
Tel: +852-2265-6688, Fax: +852 2886-9022

Renesas Electronics Taiwan Co., Ltd.
13F, No. 363, Fu Shing North Road, Taipei 10543, Taiwan
Tel: +886-2-8175-9600, Fax: +886 2-8175-9670

Renesas Electronics Singapore Pte. Ltd.
80 Bendemeer Road, Unit #06-02 Hyflux Innovation Centre, Singapore 339949
Tel: +65-6213-0200, Fax: +65-6213-0300

Renesas Electronics Malaysia Sdn.Bhd.
Unit 1207, Block B, Menara Amcorp, Amcorp Trade Centre, No. 18, Jln Persiaran Barat, 46050 Petaling Jaya, Selangor Darul Ehsan, Malaysia
Tel: +60-3-7955-9390, Fax: +60-3-7955-9510

Renesas Electronics India Pvt. Ltd.
No.777C, 100 Feet Road, HAL 2nd Stage, Indiranagar, Bangalore 560 038, India
Tel: +91-80-67208700, Fax: +91-80-67208777

Renesas Electronics Korea Co., Ltd.
17F, KAMCO Yangjae Tower, 262, Gangnam-daero, Gangnam-gu, Seoul, 06265 Korea
Tel: +82-2-558-3737, Fax: +82-2-558-5338

Colophon 7.0