SPEC

Spec No.	TQ3C-8EAF0-E1YAF42-01
Date	October 17, 2014

TYPE : TCG084SVLQAPFA-AA20

< 8.4 inch SVGA transmissive color TFT with LED backlight
constant current circuit for LED backlight and touch panel>

CONTENTS

1. Application
2. Construction and outline
3. Mechanical specifications
4. Absolute maximum ratings
5. Electrical characteristics
6. Optical characteristics
7. Interface signals
8. Input timing characteristics
9. Design guidance for analog touch panel
10. Lot number identification
11. Warranty
12. Precautions for use
13. Reliability test data
14. Outline drawing

Issued
Nov 11, 2014
KYOCERA Display Corp.

KYOCERA DISPLAY CORPORATION

This specification is subject to change without notice.
Consult Kyocera before ordering.

Original Issue Date	Designed by: Engineering dept.			Confirmed by: QA dept.	
	Prepared	Checked	Approved	Checked	Approved
January 30, 2013	M. Ichiki	Y. Yamazaki	W. Yano	O. Sato	I. Hamada

Warning

1. This Kyocera LCD module has been specifically designed for use only in electronic devices and industrial machines in the area of audio control, office automation, industrial control, home appliances, etc. The module should not be used in applications where the highest level of safety and reliability are required and module failure or malfunction of such module results in physical harm or loss of life, as well as enormous damage or loss. Such fields of applications include, without limitation, medical, aerospace, communications infrastructure, atomic energy control. Kyocera expressly disclaims any and all liability resulting in any way to the use of the module in such applications.

2. Customer agrees to indemnify, defend and hold Kyocera harmless from and against any and all actions, claims, damages, liabilities, awards, costs, and expenses, including legal expenses, resulting from or arising out of Customer's use, or sale for use, or Kyocera modules in applications.

Caution

1. Kyocera shall have the right, which Customer hereby acknowledges, to immediately scrap or destroy tooling for Kyocera modules for which no Purchase Orders have been received from the Customer in a two-year period.

Revision record

Date	Designed by : Engineering dept.			Confirmed by : QA dept.	
	Prepared	Checked	Approved	Checked	Approved
October 17, 2014	M. Ichiki	Y. Yamazaki	W. Yano	O. Sato	I. Hamada

Rev.No.	Date	Page	Descriptions
01	Oct 17, 2014	—	Change KYOCERA CORPORATION LCD DIVISION →KYOCERA DISPLAY CORPORATION
		5	5-2. Constant current circuit for LED Backlight change Operating life time Typ70,000h →100,000 h

1. Application

This document defines the specification of TCG084SVLQAPFA-AA20. (RoHS Compliant)

2. Construction and outline

LCD	: Transmissive color dot matrix type TFT
Backlight system	: LED
Polarizer	: Anti-Glare treatment
Interface	: LVDS
Additional circuit	: Timing controller, Power supply (3.3V input)
	: Constant current circuit for LED Backlight(12V input)
Touch panel	: Analog type, Non-Glare treatment

3. Mechanical specifications

3-1. LCD

Item	Specification	Unit
Outline dimensions 1)	199.5(W)×(147.4)(H)×10.8(D)	mm
Active area	170.4(W)×127.8(H) (21.3cm/8.4 inch(Diagonal))	mm
Dot format	800×(R,G,B)(W)×600(H)	dot
Dot pitch	0.071(W)×0.213(H)	mm
Base color 2)	Normally Black	-
Mass	400	g

1) Projection not included. Please refer to outline for details.
2) Due to the characteristics of the LCD material, the color varies with environmental temperature.

3-2. Touch panel

Item	Specification	Unit
Input	Radius-0.8 stylus or Finger	-
Actuation Force	0.05~0.8	N
Transmittance	Typ. 80	%
Surface hardness	Pencil hardness 2H or more according	-

4. Absolute maximum ratings

4-1. Electrical absolute maximum ratings

Item		Symbol	Min.	Max.	Unit
Supply voltage(+3.3V)		V_{DD}	-0.3	4.0	V
Supply voltage(+12V)		V_{IN}	-0.3	14.0	V
Input signal voltage 2)	RxINi+, RxINi- 1)	V_{I1}	-0.3	2.8	V
	CK IN+, CK IN-	V_{I2}	-0.3	2.8	V
	SELLVDS	V_{I3}	-0.3	V_{DD}+0.5	V
	BLBRT, BLEN	V_{I4}	-0.3	V_{IN}	V
Supply voltage for touch panel		V_{TP}	0	6.0	V
Input current of touch panel		I_{TP}	0	0.5	mA

1) i=0,1,2,3
2) V_{DD} must be supplied correctly within the range described in 5-1.

4-2. Environmental absolute maximum ratings

Item		Symbol	Min.	Max.	Unit
Operating temperature	1)	T_{OP}	-20	70	°C
Storage temperature	2)	T_{STO}	-30	80	°C
Operating humidity	3)	H_{OP}	10	4)	%RH
Storage humidity	3)	H_{STO}	10	4)	%RH
Vibration		-	5)	5)	-
Shock		-	6)	6)	-

1) Operating temperature means a temperature which operation shall be guaranteed. Since display performance is evaluated at 25°C, another temperature range should be confirmed.
2) Temp. = -30°C＜48h , Temp. = 80°C＜168h
Store LCD at normal temperature/humidity. Keep them free from vibration and shock.
An LCD that is kept at a low or a high temperature for a long time can be defective due to other conditions, even if the low or high temperature satisfies the standard.
(Please refer to “Precautions for Use” for details.)
3) Non-condensing
4) Temp.≦40°C, 85%RH Max.
Temp.＞40°C, Absolute humidity shall be less than 85%RH at 40°C.
5)

Frequency	10～55 Hz	Acceleration value (0.3～9 m/s²)
Vibration width	0.15mm	
Interval	10-55-10 Hz 1 minutes	

2 hours in each direction X, Y, Z (6 hours total)
EIAJ ED-2531
6) Acceleration: 490 m/s², Pulse width: 11 ms
3 times in each direction: ±X, ±Y, ±Z
EIAJ ED-2531

5. Electrical characteristics

5-1. LCD

Temp. = -20～70°C

Item		Symbol	Condition	Min.	Typ.	Max.	Unit
Supply voltage	1)	V_{DD}	-	3.0	3.3	3.6	V
Current consumption		I_{DD}	2)	-	270	330	mA
Permissive input ripple voltage		V_{RP}	V_{DD}=3.3V	-	-	100	mVp-p
Input signal voltage	3)	V_{IL}	"Low" level	0	-	0.8	V
		V_{IH}	"High" level	2.0	-	V_{DD}	V
Input reek current		I_{OL}	V_{I3}=0V	-10	-	10	μA
		I_{OH}	V_{I3}=3.3V	-	-	400	μA
LVDS Input voltage	4)	V_L	-	0	-	1.9	V
Differential input voltage	4)	V_{ID}	-	250	350	450	mV
Differential input threshold voltage	4) 5)	V_{TL}	"Low" level	V_{CM}-100	-	-	mV
		V_{TH}	"High" level	-	-	V_{CM}+100	mV
Terminator		R_1	-	-	100	-	Ω
V_{DD}-turn-on conditions	1)	t1	-	0.1	-	10	ms
		t2	-	0	-	-	ms
		t3	-	0	-	-	ms
		t4	-	1.0	-	-	s
		t5	-	200	-	-	ms
		t6	-	200	-	-	ms
		t7	-	0	-	10	s
		t8	-	0	-	-	ms

1) V_{DD}-turn-on conditions

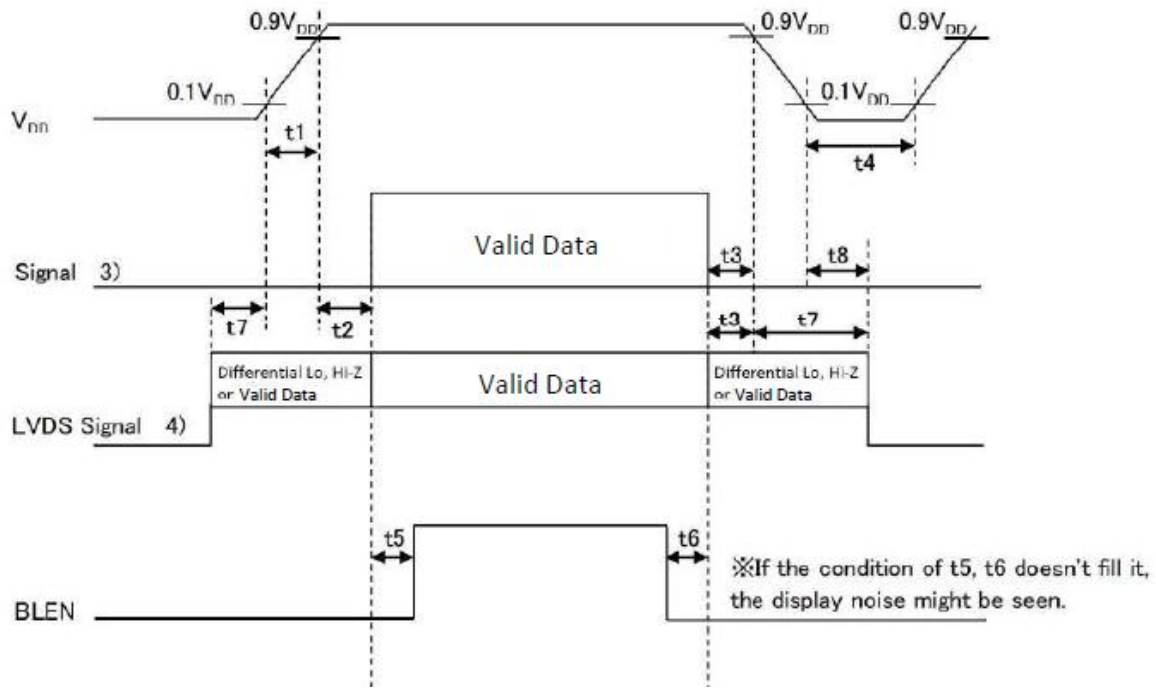

2) Display pattern:
V_{DD} = 3.3V, Temp. = 25°C

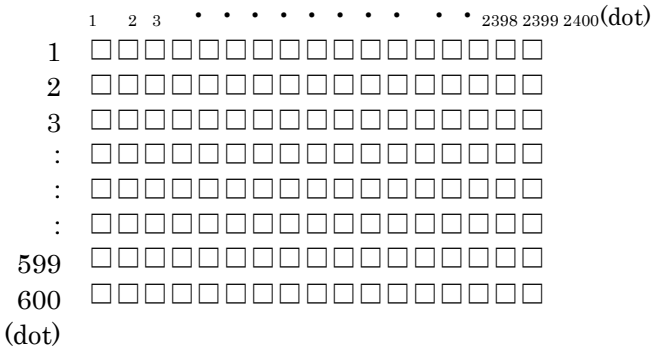

3) Input signal : SELLVDS

4) Input signal : RxIN3+, RxIN3-, RxIN2+, RxIN2-, RxIN1+, RxIN1-, RxIN0+, RxIN0-
CK IN+, CK IN-

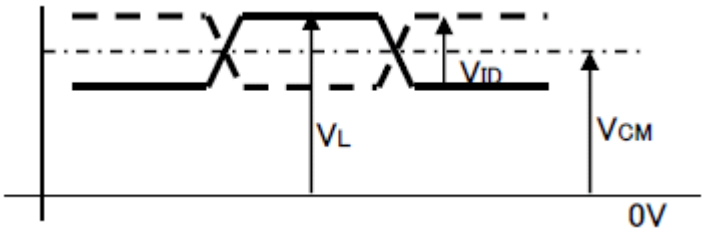

5) V_{CM} : LVDS Common mode voltage (V_{CM}=1.25V)

6) Please power on LVDS transmitter at the same time as VDD, or LVDS transmitter should be powered on first.

5-2. Constant current circuit for LED Backlight

Temp. = -20～70°C

Item	Symbol	Condition	Min.	Typ.	Max.	Unit
Supply voltage 1)	V_{IN}	-	10.8	12.0	13.2	V
Current consumption	I_{IN}	2)	-	330	500	mA
Permissive input ripple voltage	V_{RP_BL}	V_{IN}=12.0V	-	-	100	mVp-p
BLBRT Input signal voltage	V_{IL_BLBRT}	"Low" level	0	-	0.8	V
	V_{IH_BLBRT}	"High" level	2.3	-	V_{IN}	V
BLBRT Input pull-down resistance	R_{IN_BLBRT}	-	100	300	500	kΩ
BLEN Input signal voltage	V_{IL_BLEN}	"Low" level	0	-	0.8	V
	V_{IH_BLEN}	"High" level	2.3	-	V_{IN}	V
BLEN Input pull-down resistance	R_{IN_BLEN}	-	100	300	500	kΩ
PWM Frequency 3)	f_{PWM}	-	200	-	10k	Hz
PWM Duty ratio 3)	D_{PWM}	f_{PWM}=200Hz	1	-	100	%
		f_{PWM}=2kHz	10	-	100	%
		f_{PWM}=10kHz	50	-	100	%
Operating life time 4), 5)	T	Temp.=25°C	-	100,000	-	h

1) V_{IN}-turn-on conditions

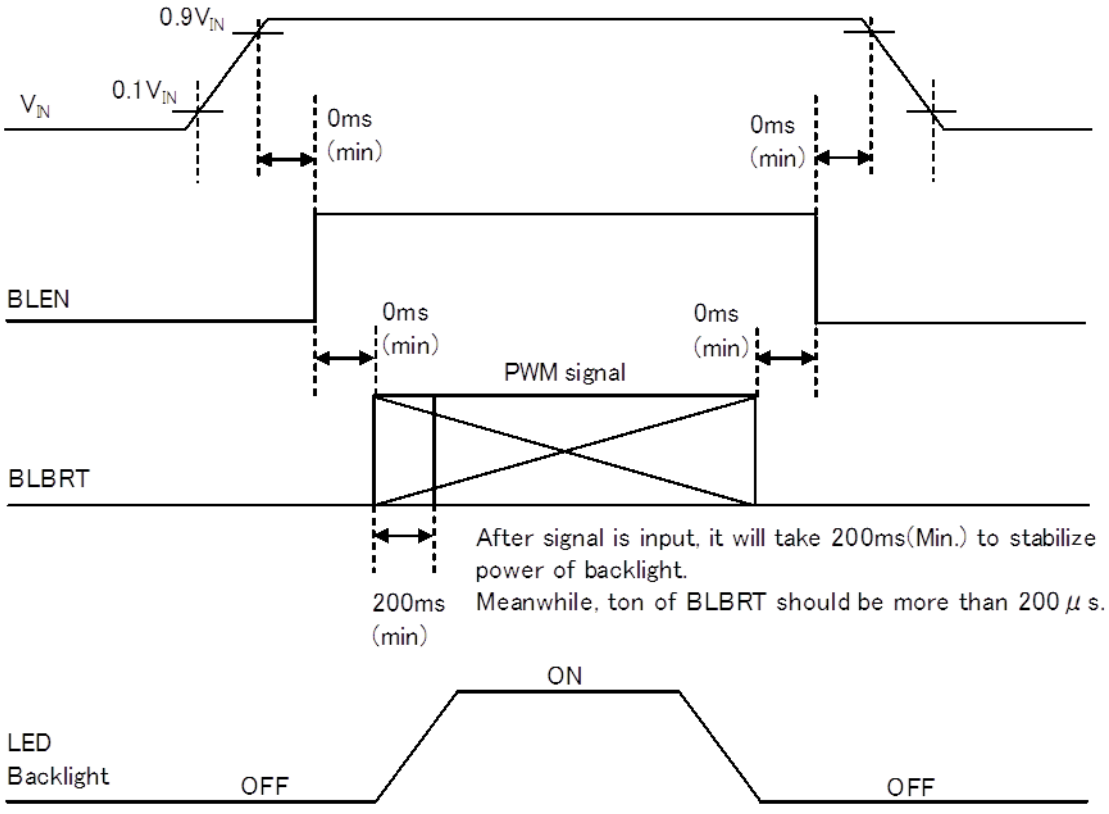

2) V_{IN} = 12V, Temp. = 25℃, D_{PWM} = 100%

3) PWM Timing Diagram

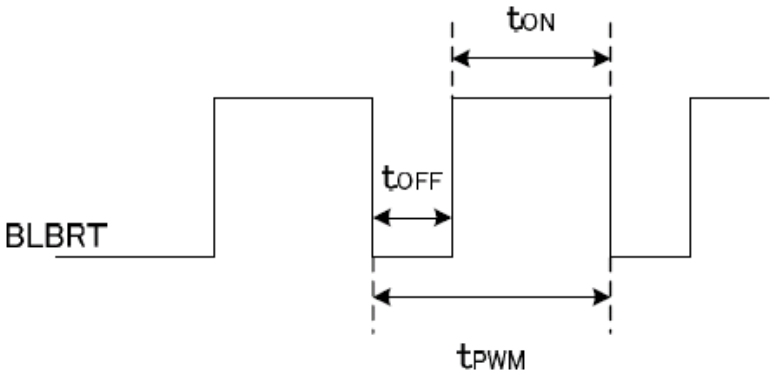

t_{ON}, t_{OFF} ≧ 50 μs.
In case of lower frequency, the deterioration of the display quality, flicker etc., may occur.

4) When brightness decrease 50% of minimum brightness.
The average life of a LED will decrease when the LCD is operating at higher temperatures.

5) Life time is estimated data.(Condition : IF=60mA, Ta=25℃ in chamber).

5-3. Touch panel

Item	Specification
Supply voltage for touch panel	5.0V
Terminal resistance	xL～xR : 363Ω～847Ω
	yU～yL : 230Ω～536Ω
Linearity	less than ±2.0%
Insulation resistance	100MΩ or more at DC25V

6. Optical characteristics

Measuring spot = ϕ 6.0mm, Temp. = 25°C

Item		Symbol	Condition	Min.	Typ.	Max.	Unit
Response time	Rise	τ_r	$\theta = \phi = 0°$	-	18	-	ms
	Down	τ_d	$\theta = \phi = 0°$	-	12	-	ms
Viewing angle range		θ UPPER	CR≧10	-	85	-	deg.
		θ LOWER		-	85	-	
		ϕ LEFT		-	85	-	deg.
		ϕ RIGHT		-	85	-	
Contrast ratio		CR	$\theta = \phi = 0°$	350	500	-	-
Brightness		L	IF=60mA/Line	220	320	-	cd/m²
Chromaticity coordinates	Red	x	$\theta = \phi = 0°$	0.550	0.600	0.650	-
		y		0.300	0.350	0.400	
	Green	x	$\theta = \phi = 0°$	0.285	0.335	0.385	
		y		0.520	0.570	0.620	
	Blue	x	$\theta = \phi = 0°$	0.100	0.150	0.200	
		y		0.070	0.120	0.170	
	White	x	$\theta = \phi = 0°$	0.265	0.315	0.365	
		y		0.290	0.340	0.390	

6-1. Definition of contrast ratio

$$\text{CR(Contrast ratio)} = \frac{\text{Brightness with all pixels "White"}}{\text{Brightness with all pixels "Black"}}$$

6-2. Definition of response time

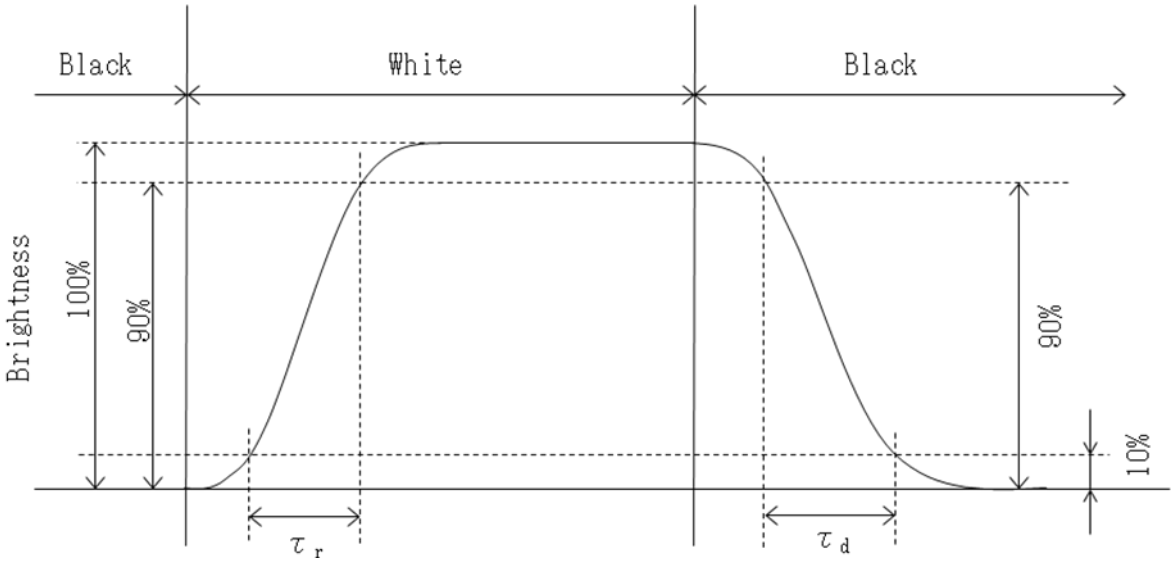

6-3. Definition of viewing angle

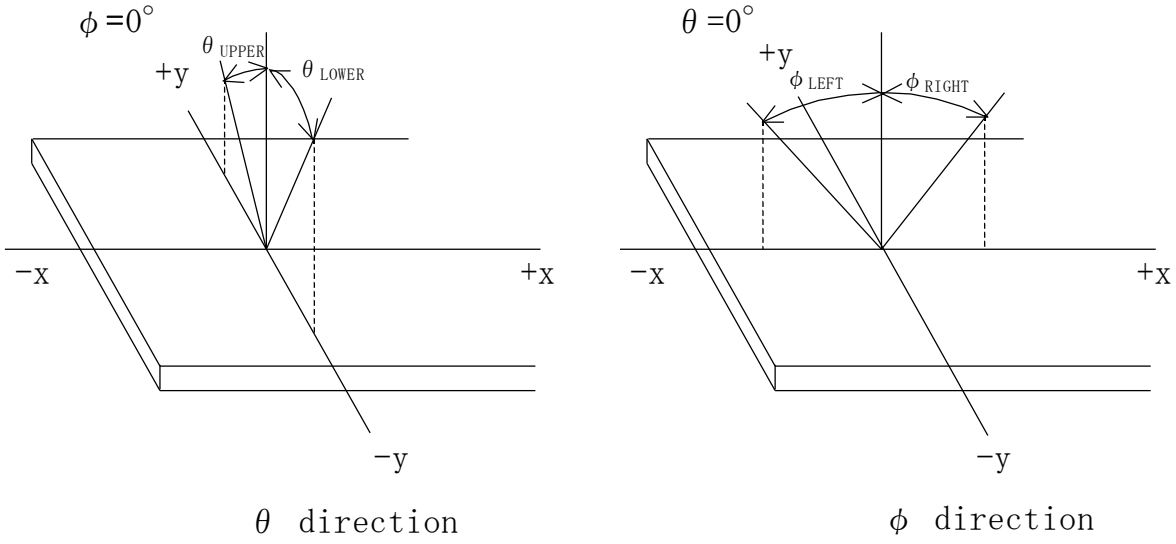

θ direction　　ϕ direction

6-4. Brightness measuring points

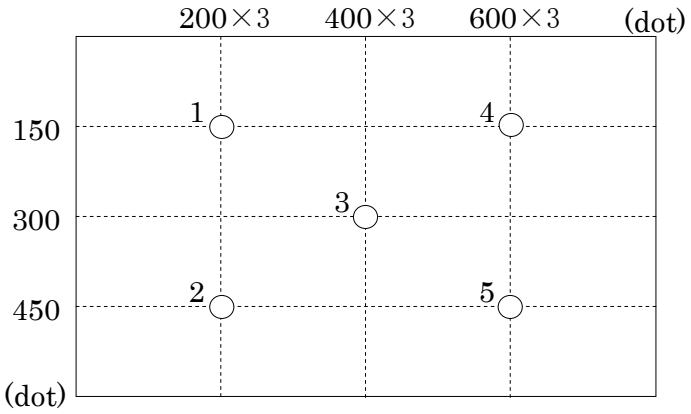

1) Rating is defined as the white brightness at center of display screen(3).
2) 5 minutes after LED is turned on. (Ambient Temp.=25℃)

7. Interface signals

7-1. Interface signals

No.	Symbol	Description	Note
1	GND	GND	
2	SELLVDS	Mode select signal(LVDS Data mapping)	
3	GND	GND	
4	GND	GND	
5	RxIN3+	LVDS receiver signal CH3(+)	LVDS
6	RxIN3-	LVDS receiver signal CH3(-)	LVDS
7	GND	GND	
8	CK IN+	LVDS receiver signal CK(+)	LVDS
9	CK IN-	LVDS receiver signal CK(-)	LVDS
10	GND	GND	
11	RxIN2+	LVDS receiver signal CH2(+)	LVDS
12	RxIN2-	LVDS receiver signal CH2(-)	LVDS
13	GND	GND	
14	RxIN1+	LVDS receiver signal CH1(+)	LVDS
15	RxIN1-	LVDS receiver signal CH1(-)	LVDS
16	GND	GND	
17	RxIN0+	LVDS receiver signal CH0(+)	LVDS
18	RxIN0-	LVDS receiver signal CH0(-)	LVDS
19	GND	GND	
20	GND	GND	
21	V_{DD}	+3.3V power supply	
22	V_{DD}	+3.3V power supply	
23	GND	GND	
24	BLBRT	PWM signal(Brightness adjustment)	
25	BLEN	ON/OFF terminal voltage	
26	GND	GND	
27	V_{IN}	+12V power supply	
28	V_{IN}	+12V power supply	
29	GND	GND	
30	GND	GND	

LCD connector	:	FI-X30SSLA-HF	(JAE)
Matching connector	:	FI-X30HL	(JAE)
	:	FI-X30HL-T	(JAE)
	:	FI-X30C2L-NPB	(JAE)
	:	FI-X30C2L-T-NPB	(JAE)

LVDS receiver	:	Embedded in ASIC
Matching LVDS transmitter	:	THC63LVDM83R(THine Electronics) or compatible

7-2. Data mapping(6bit RGB input)

1) Location of SELLVDS (THC63LVDM83R(THine Electronics) or compatible)

Transmitter		2Pin SELLVDS	
Pin No.	Data	= L(GND) or OPEN	= H(3.3V)
51	TA0	—	R0(LSB)
52	TA1	—	R1
54	TA2	—	R2
55	TA3	—	R3
56	TA4	—	R4
3	TA5	—	R5(MSB)
4	TA6	—	G0(LSB)
6	TB0	—	G1
7	TB1	—	G2
11	TB2	—	G3
12	TB3	—	G4
14	TB4	—	G5(MSB)
15	TB5	—	B0(LSB)
19	TB6	—	B1
20	TC0	—	B2
22	TC1	—	B3
23	TC2	—	B4
24	TC3	—	B5(MSB)
27	TC4	—	(HS)
28	TC5	—	(VS)
30	TC6	—	DE
50	TD0	—	GND
2	TD1	—	GND
8	TD2	—	GND
10	TD3	—	GND
16	TD4	—	GND
18	TD5	—	GND
25	TD6	—	GND

SELLVDS=H(3.3V)

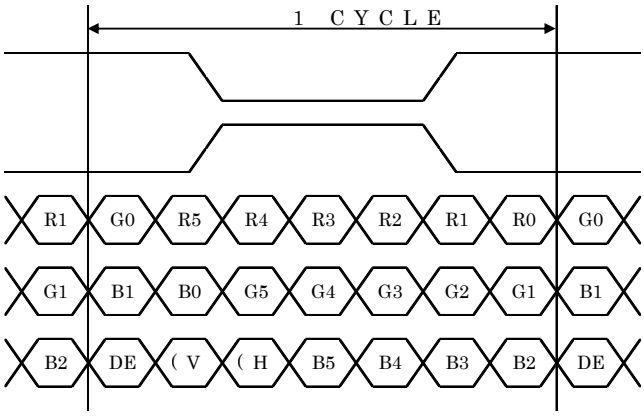

DE : DATA ENABLE
HS : HSYNC
VS : VSYNC

2) Block Diagram

SELLVDS=H(3.3V)

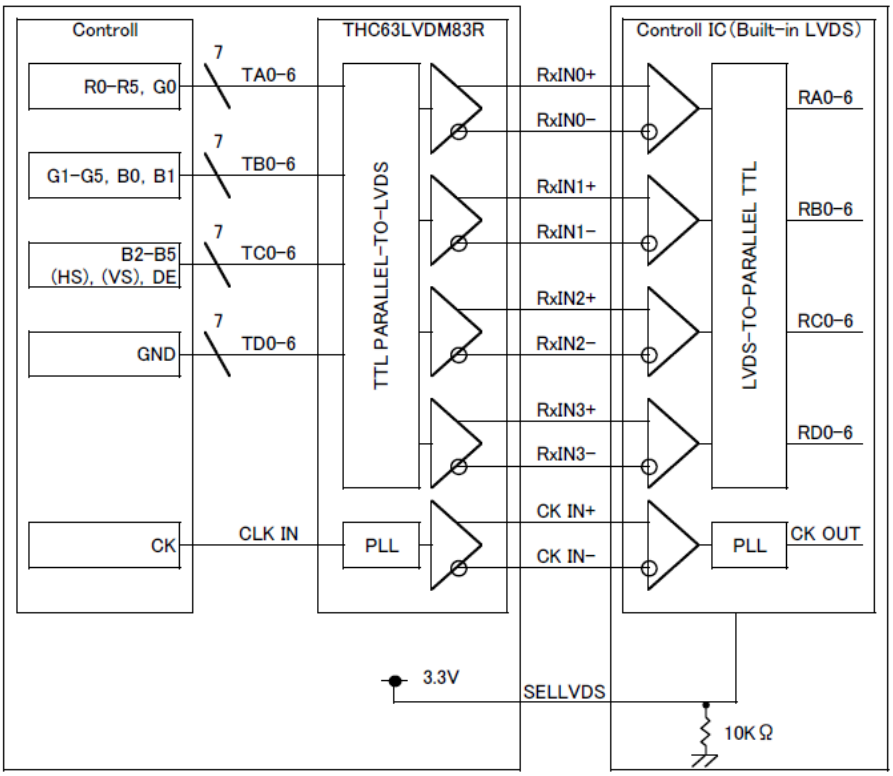

※SELLVDS signal line has 10 k Ω pulldown resister.

When using "6-bit Transmitter", please connect the unused channel of the control IC receiver as described in the diagram below.

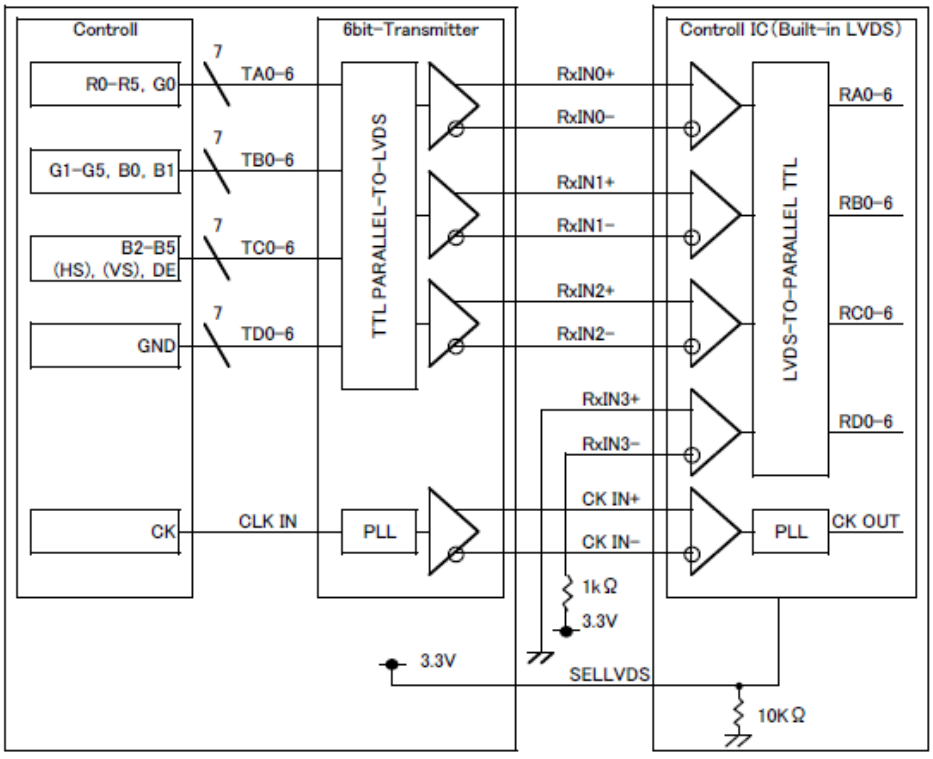

※SELLVDS signal line has 10 k Ω pulldown resister.

7-3. Data mapping(8bit RGB input)

1) Location of SELLVDS (THC63LVDM83R(THine Electronics) or compatible)

Transmitter		2Pin SELLVDS	
Pin No.	Data	= L(GND) or OPEN	= H(3.3V)
51	TA0	R0(LSB)	R2
52	TA1	R1	R3
54	TA2	R2	R4
55	TA3	R3	R5
56	TA4	R4	R6
3	TA5	R5	R7(MSB)
4	TA6	G0(LSB)	G2
6	TB0	G1	G3
7	TB1	G2	G4
11	TB2	G3	G5
12	TB3	G4	G6
14	TB4	G5	G7(MSB)
15	TB5	B0(LSB)	B2
19	TB6	B1	B3
20	TC0	B2	B4
22	TC1	B3	B5
23	TC2	B4	B6
24	TC3	B5	B7(MSB)
27	TC4	(HS)	(HS)
28	TC5	(VS)	(VS)
30	TC6	DE	DE
50	TD0	R6	R0(LSB)
2	TD1	R7(MSB)	R1
8	TD2	G6	G0(LSB)
10	TD3	G7(MSB)	G1
16	TD4	B6	B0(LSB)
18	TD5	B7(MSB)	B1
25	TD6	(NA)	(NA)

SELLVDS=L(GND) or OPEN

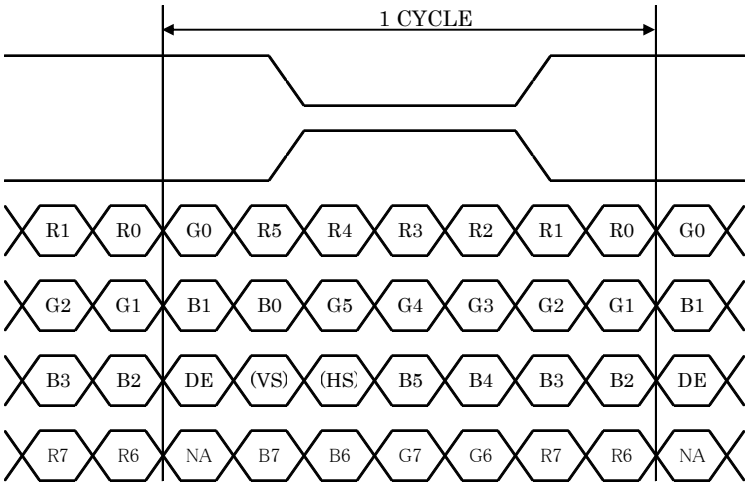

DE : DATA ENABLE
HS : HSYNC
VS : VSYNC

SELLVDS=H(3.3V)

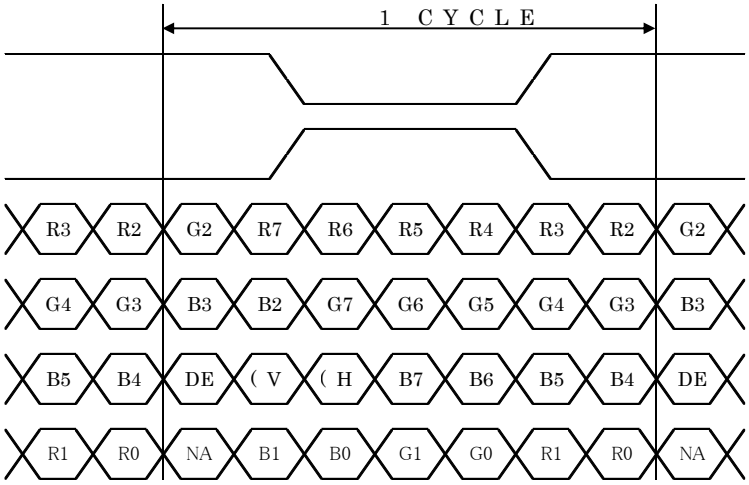

DE : DATA ENABLE
HS : HSYNC
VS : VSYNC

2) Block Diagram

SELLVDS=L(GND) or OPEN

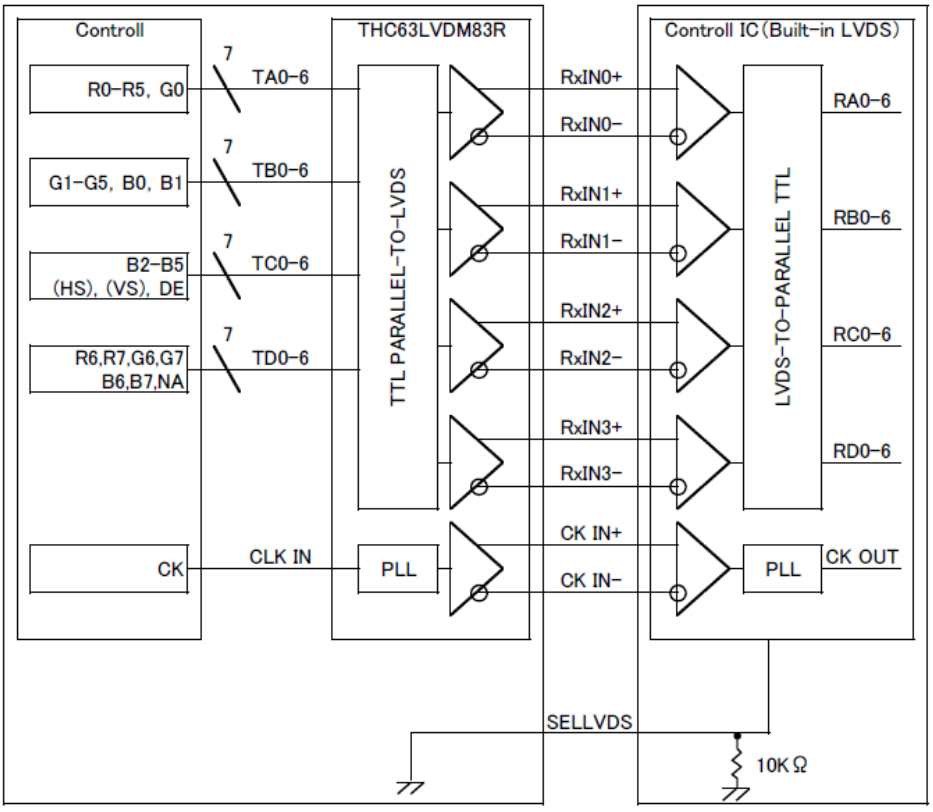

※SELLVDS signal line has 10 k Ω pulldown resister.

SELLVDS=H(3.3V)

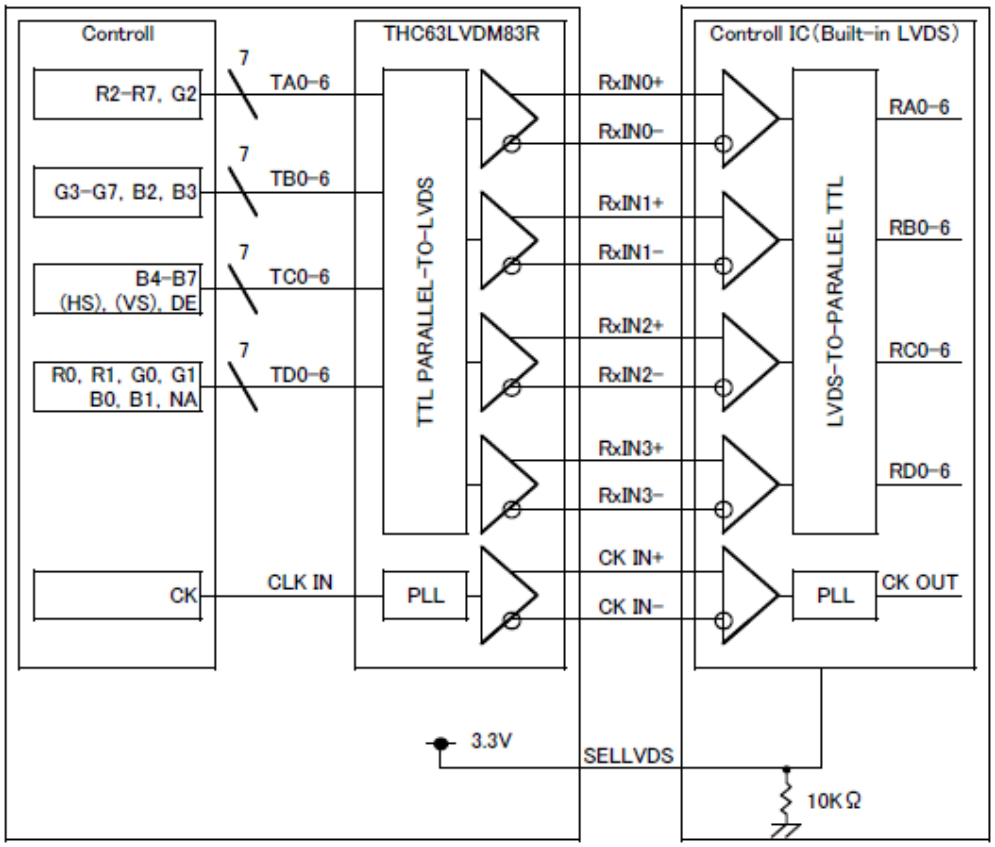

※SELLVDS signal line has 10 k Ω pulldown resister.

7-4. Touch panel

No.	Symbol	Description
1	xR	x-Right terminal
2	yL	y-Lower terminal
3	xL	x-Left terminal
4	yU	y-Upper terminal

Touch panel side connector : 1mm pitch
Recommended matching connector : 08 6262 004 940 846+ (KYOCERA Connector Products)

8. Input timing characteristics

8-1. Timing characteristics

Item		Symbol	Min.	Typ.	Max.	Unit	Note
Clock (CK)	Frequency	1/Tc	30	40	48	MHz	
Enable signal (DE)	Horizontal Period	Th	860	1056	1395	Tc	
			24.0	26.4	-	μs	1)
	Horizontal display period	Thd		800		Tc	
	Vertical Period	Tv	610	628	1024	Th	
	Vertical display period	Tvd		600		Th	
Refresh rate		fv	50	60	70	Hz	2)

1) Please set a clock frequency, a vertical dormant period, and the horizontal dormant period so that the Horizontal Period should not reach less than Min. value.

2) If the refresh rate reach less than Min. value, the deterioration of the display quality, flicker etc., may occur.(fv=1/Tv)

Vertical Timing Diagram

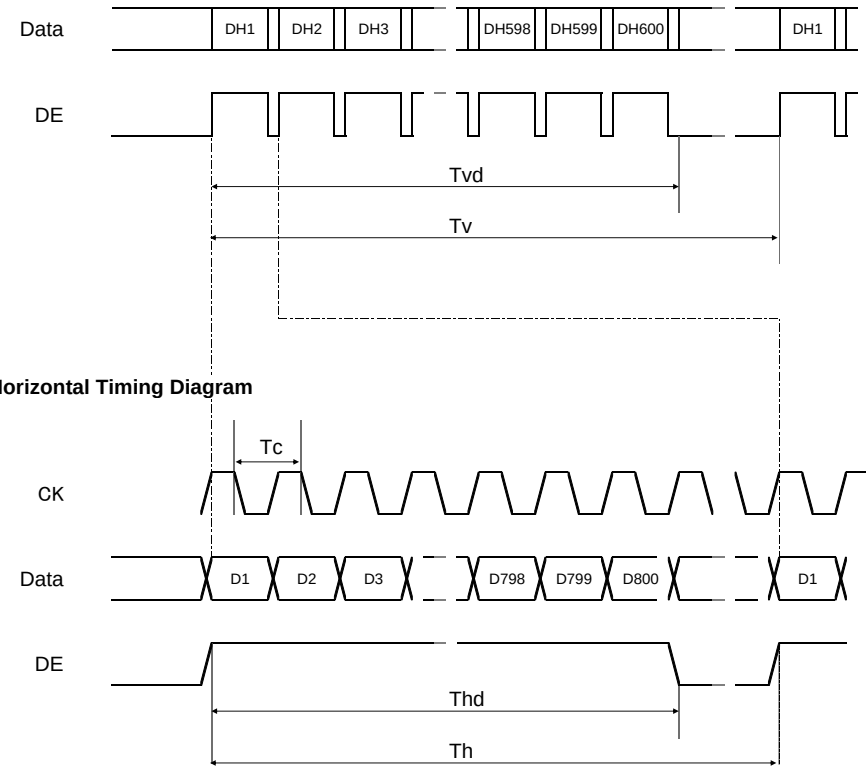

Horizontal Timing Diagram

8-2. Input Data Signals and Display position on the screen

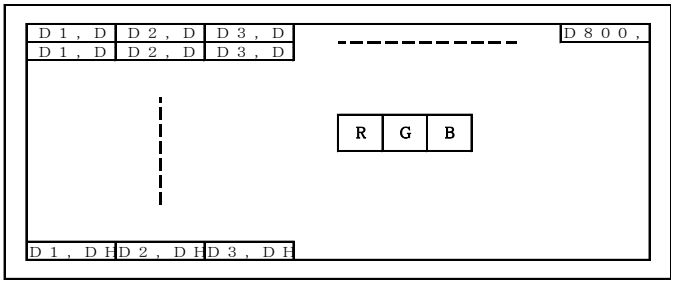

9. Design guidance for analog touch panel

9-1. Electrical (In customer's design, please remember the following considerations.)

1) Do not use the current regulated circuit.
2) Keep the current limit with top and bottom layer.
   (Please refer to “Electrical absolute maximum ratings” for details.)
3) Analog touch panel can not sense two points touching separately.
4) A contact resistance is appeared at the touch point between top and bottom layer.
   After this resistance has stable read of the touch panel position data.
5) Because noise of inverter or peripheral circuits may interfere signal of touch panel itself
   it is necessary to design carefully in advance to avoid these noise problem.

9-2. Software

1) Do the "User Calibration".
2) "User Calibration" may be needed with long term using.
   Include "User Calibration" menu in your software.
3) When drawing a line with a stylus, there may be a slight discontinuity when the stylus passes over a spacer-dot. If necessary, please provide a compensation feature within your software.

9-3. Mounting on display and housing bezel

1) Do not use an adhesive tape to bond it on the front of touch panel and hang it to the housing bezel.
2) Never expand the touch panel top layer (PET-film) like a balloon by internal air pressure.
   The life of the touch panel will be extremely short.
3) If a dew will be on the heat-sealed area or exposed traces at the end of a flexible tail,
   the migration of silver can occur. This will cause sometimes a short circuit.
4) Must maintain a gap between inside of bezel and touch panel to avoid malfunction or electrode damage of touch panel.

10. Lot number identification

The lot number shall be indicated on the back of the backlight case of each LCD.

TCG084SVLQAPFA-AA20 - □□ - □□ - □ MADE IN □□□□□

↓↓ ↓ ↓ ↓

1 2 3 4 5

No1. - No5. above indicate
1. Year code
2. Month code
3. Date
4. Version Number
5. Country of origin (Japan or China)

Year	2013	2014	2015	2016	2017	2018
Code	3	4	5	6	7	8

Month	Jan.	Feb.	Mar.	Apr.	May	Jun.
Code	1	2	3	4	5	6

Month	Jul.	Aug.	Sep.	Oct.	Nov.	Dec.
Code	7	8	9	X	Y	Z

11. Warranty

11-1. Incoming inspection

Please inspect the LCD within one month after your receipt.

11-2. Production warranty

Kyocera warrants its LCD's for a period of 12 months from the ship date. Kyocera shall, by mutual agreement, replace or re-work defective LCD's that are shown to be Kyocera's responsibility.

12. Precautions for use

12-1. Installation of the LCD

1) Please ground either of the mounting (screw) holes located at each corner of an LCD, in order to stabilize brightness and display quality.
2) The LCD shall be installed so that there is no pressure on the LSI chips.
3) Since this product is wide viewing product, occurrence level of in-plane unevenness by the external stress is different compared to current normal viewing product. So there is a possibility that in-plane unevenness will be occurred by over twist, strain giving by attaching to LCD, and over pressure to touch panel. Please be careful of stress when designing the housing.

12-2. Static electricity

1) Workers should use body grounding. Operator should wear ground straps.

12-3. LCD operation

1) The LCD shall be operated within the limits specified. Operation at values outside of these limits may shorten life, and/or harm display images.
2) Please select the best display pattern based on your evaluation because flicker, lines or nonuniformity or unevenness can be visible depending on display patterns.

12-4. Storage

1) The LCD shall be stored within the temperature and humidity limits specified. Store in a dark area, and protect the LCD from direct sunlight or fluorescent light.
2) Always store the LCD so that it is free from external pressure onto it.

12-5. Usage

1) DO NOT store in a high humidity environment for extended periods. Polarizer degradation bubbles, and/or peeling off of the polarizer may result.
2) Do not push or rub the touch panel's surface with hard to sharp objects such as knives, or the touch panel may be scratched.
3) When the touch panel is dirty, gently wipe the surface with a soft cloth, sometimes moistened by mild detergent or alcohol. If a hazardous chemical is dropped on the touch panel by mistake, wipe it off right away to prevent human contact.
4) Touch panel edges are sharp. Handle the touch panel with enough care to prevent cuts.
5) Always keep the LCD free from condensation during testing. Condensation may permanently spot or stain the polarizer.
6) Do not disassemble LCD because it will result in damage.
7) This Kyocera LCD has been specifically designed for use in general electronic devices, but not for use in a special environment such as usage in an active gas. Hence, when the LCD is supposed to be used in a special environment, evaluate the LCD thoroughly beforehand and do not expose the LCD to chemicals such as an active gas.
8) Please do not use solid-base image pattern for long hours because a temporary afterimage may appear. We recommend using screen saver etc. in cases where a solid-base image pattern must be used.
9) Liquid crystal may leak when the LCD is broken. Be careful not to let the fluid go into your eyes and mouth. In the case the fluid touches your body; rinse it off right away with water and soap.

13. Reliability test data

Test item	Test condition	Test time	Judgement
High temp. atmosphere	80°C	240h	Display function : No defect Display quality : No defect Current consumption : No defect
Low temp. atmosphere	-30°C	240h	Display function : No defect Display quality : No defect Current consumption : No defect
High temp. humidity atmosphere	40°C 90% RH	240h	Display function : No defect Display quality : No defect Current consumption : No defect
Temp. cycle	-30°C 0.5h R.T. 0.5h 80°C 0.5h	10cycles	Display function : No defect Display quality : No defect Current consumption : No defect
High temp. operation	70°C	500h	Display function : No defect Display quality : No defect Current consumption : No defect
Point Activation life	Silicon rubber, Tip : R = 4.0 Hitting force 3N Hitting speed 2 time/s	one million times	Terminal resistance : No defect Insulation resistance : No defect Linearity : No defect Actuation Force : No defect

1) Each test item uses a test LCD only once. The tested LCD is not used in any other tests.
2) The LCD is tested in circumstances in which there is no condensation.
3) The reliability test is not an out-going inspection.
4) The result of the reliability test is for your reference purpose only.
   The reliability test is conducted only to examine the LCD's capability.

No	Description	Drawn	Checked	Checked	Approved

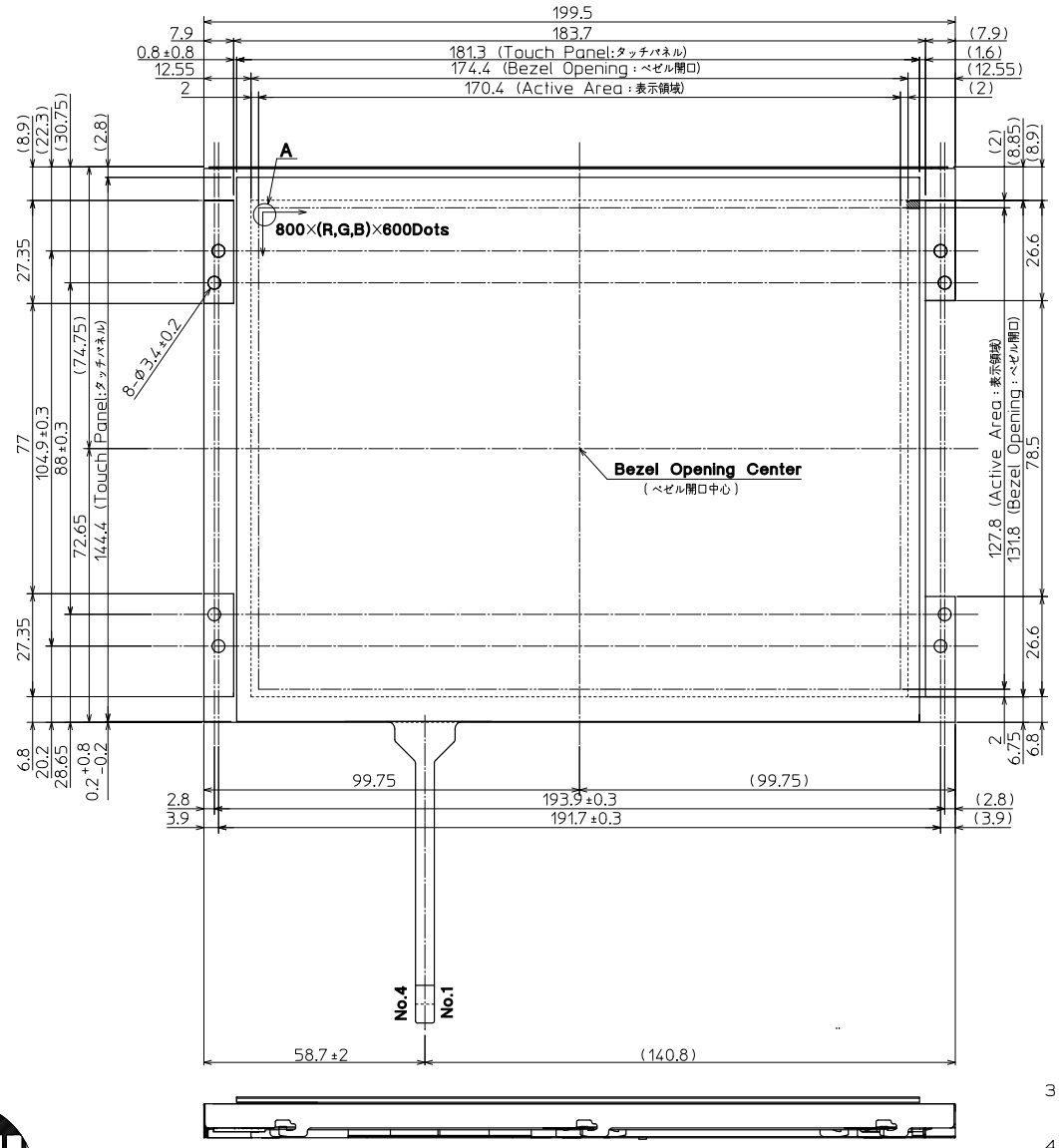

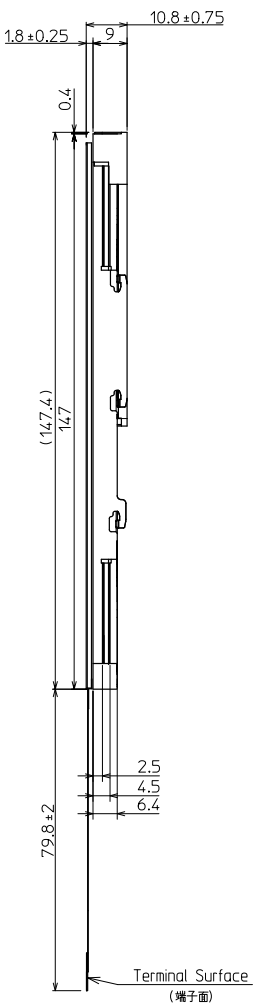

DETAIL A (Dot Size)
(NTS)

Note. (注記)
1. Connector CN1: FI-X30SSLA-HF (JAE)
(コネクター)
2. Matching Connector CN1: FI-X30HL, FI-X30HL-T,
(適合コネクター) FI-X30C2L-NPB, FI-X30C2L-T-NPB (JAE)

3. The Information of LCD is displayed starting at the upper left hand corner, moving right then down to the lower right hand corner.
(LCDにおいて、画像データの表示は左上コーナーから始まり、右へ進み下へ送られ右下コーナーへ向かう.)
4. Tolerance without indication : ±0.5
(指示無き公差)
5. There is a possibility that in-plane unevenness will be occurred by over twist, stress giving by attaching to LCD, and over pressure to touch panel. Please be careful of stress when designing the housing.
(過度な捻じり(ひずみ)、LCD固定時での応力発生、タッチパネルでの過度な押し圧によっては、パネル面内にムラが発生することがありますので、筐体設計において、事前に十分確認願います.)
6. Touch Panel P/N : PZ012900 (121A8049800)

Material 材質	Treatment 処理	Approved	Checked	Checked	Drawn	Scale	Title		Year-Month-Day	Size
		'12.08.10		'12.08.10		1:1 (NTS)	TCG084SVLQAPFA	KYOCERA	'12.08.07	2
Quantity 製作数	Description; 備考 RoHS	朝倉		今村	圓福		Outline Dimensions	Drawing No. 121A8061900		1/2

No	Description	Drawn	Checked	Checked	Approved

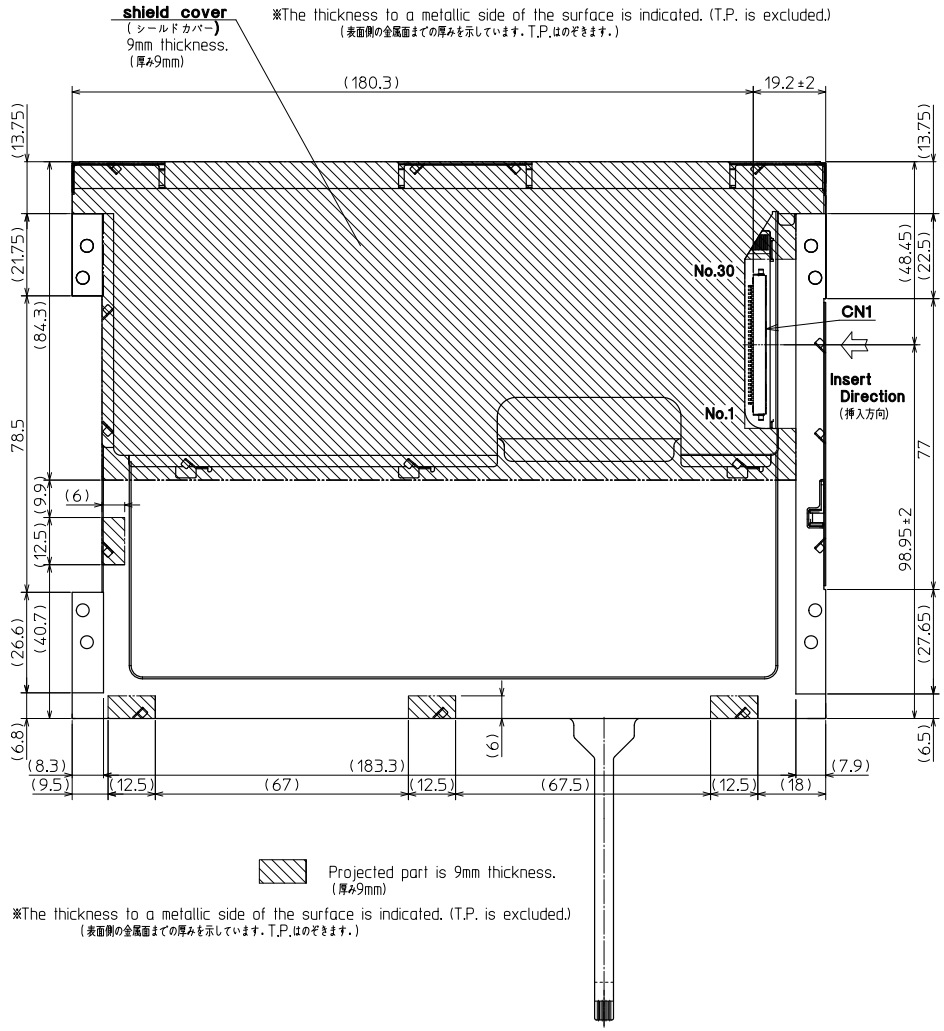

This drawing is a back side view of a flip horizontal to a front drawing.

※ 1/2 正図面に対して左右反転の裏面図である。

Note. (注記)
1. Tolerance without indication : ±0.5
（指示無き公差）

Material 材質	Treatment 処理	Approved	Checked	Checked	Drawn	Scale	Title		Year-Month-Day	Size
		'12.08.10		'12.08.10		1:1	TCG084SVLQAPFA	KYOCERA	'12.08.07	2
Quantity 製作数	Description; 備考 RoHS	朝倉		今村	圓福		Outline Dimensions	Drawing No.	121A8061900	2/2

No	Description	Drawn	Checked	Checked	Approved

Note(注記)

	Name (名称)	Explanation (説明)
1	T.P.	Touch panel (タッチパネル)
2	T.P. Active Area (T.P.アクティブエリア)	Operating area of touch panel (タッチパネルの動作範囲)
3	T.P. Viewing Area (T.P.ビューイングエリア)	Warranty area of touch panel's appearance (タッチパネルの外観(傷・異物等)保証範囲)
		By giving pressure between the active area and the viewing area of the touch panel, there is a possibility that the touch panel will operate. (タッチパネルアクティブエリアとタッチパネルビューイングエリア間は荷重をかけた場合は、タッチパネルが動作する可能性があります。)

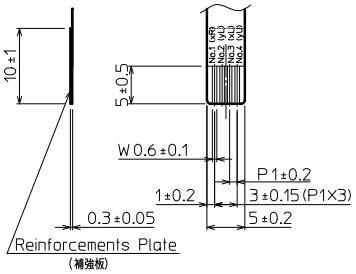

VIEWING A (2:1)

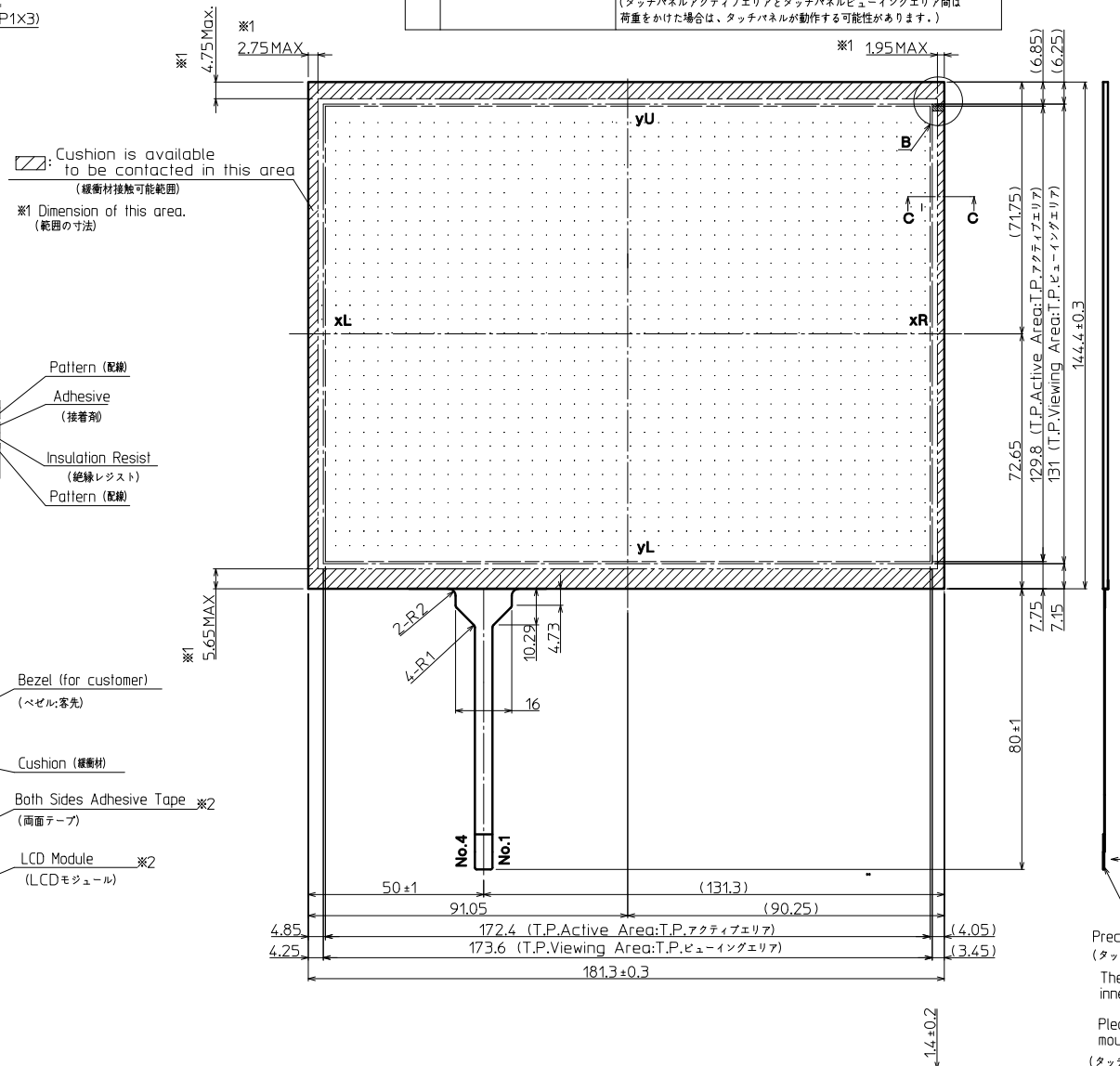

: Cushion is available to be contacted in this area
(緩衝材接触可能範囲)

※1 Dimension of this area.
(範囲の寸法)

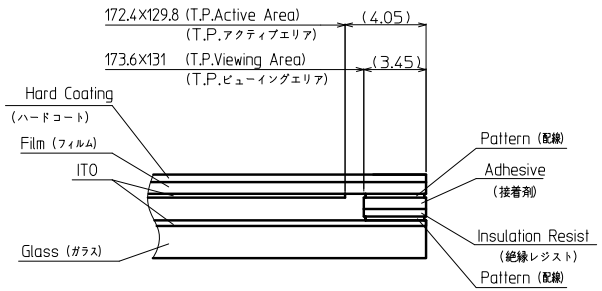

SECTION C–C (NTS)

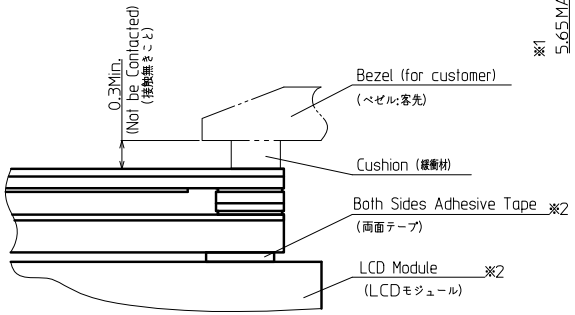

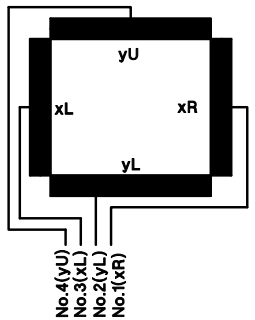

Touch Panel Pin–assign

(Pin-assign from Touch side)
(タッチパネル ピンアサイン、
タッチ面側からのピンアサイン)

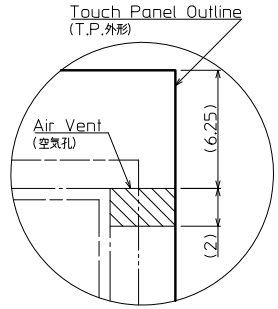

DETAIL B (5:1)

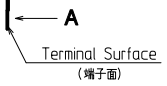

Precaution in use of touch panel.
(タッチパネル使用上の注意事項)
※2 In case of assemble to the LCD
(LCDに取りつける場合)
1. Fix touch panel at LCD module and the rear side of touch panel.
(タッチパネルの固定はLCDモジュール側とタッチパネル裏面とで行なうこと)
2. Must maintain a gap between inside of bezel and touch panel to avoid malfunction or electrode damage of touch panel.
(ベゼル内側とタッチパネルの接触厳禁。誤動作や電極破損の原因となります。)
3. Tolerance without indication: ±0.5
(指示無き公差)

Precaution in use of touch panel.
(タッチパネル使用上の注意事項)
There is vent channel to equalize air pressure between the inner space of the touch panel and the atmosphere.
Please make sure it is not blocked by your housing and mounting method.
(タッチパネルの中には内圧と外圧を均一にするため通気孔を設けています。
取り付け時にこの通気孔を塞がないようにしてください。)

Material 材質	Treatment 処理	Approved '11.09.01	Checked	Checked '11.09.01	Drawn	Scale 1:1 (2:1.5:1,NTS)	Title P2012900	KYOCERA	Year–Month–Day '11.08.31
Quantity 製作数	Description; 備考 RoHS	鶴崎		木口	角田		T.P. Outline Dimensions	Drawing No. 121A8049800	Size 2

Spec No.	TQ3C-8EAF0-E2YAF42-01
Date	October 17, 2014

KYOCERA INSPECTION STANDARD

TYPE : TCG084SVLQAPFA-AA20

KYOCERA DISPLAY CORPORATION

Original Issue Date	Designed by : Engineering dept.			Confirmed by : QA dept.	
	Prepared	Checked	Approved	Checked	Approved
January 30, 2013	M. Ichiki	Y. Yamazaki	W. Yano	O. Sato	I. Hamada

Revision record

Date	Designed by : Engineering dept.			Confirmed by : QA dept.	
	Prepared	Checked	Approved	Checked	Approved
October 17, 2014	M. Ichiki	Y. Yamazaki	W. Yano	O. Sato	I. Hamada

Rev.No.	Date	Page	Descriptions
01	Oct 17, 2014	—	Change KYOCERA CORPORATION LCD DIVISION →KYOCERA DISPLAY CORPORATION
		1	Change “Definition of inspection item”, Bright dot defect

Visuals specification

1) Note

	Note		
General	1. Customer identified anomalies not defined within this inspection standard shall be reviewed by Kyocera, and an additional standard shall be determined by mutual consent. 2. This inspection standard about the image quality shall be applied to any defect within the effective viewing area and shall not be applicable to outside of the area. 3. Inspection conditions Luminance : 500 Lux min. Inspection distance : 300 mm. Temperature : 25 ± 5℃ Direction : Directly above		
Definition of inspection item	Dot defect	Bright dot defect	The dot is constantly "on" when power applied to the LCD, even when all "Black" data sent to the screen. Inspection tool: 5% Transparency neutral density filter. Count dot: If the dot is visible through the filter. Don't count dot: If the dot is not visible through the filter. 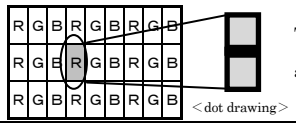 There is an electrode in the middle of the dot and one dot is shown in the left drawing. ＜dot drawing＞
		Black dot defect	The dot is constantly "off" when power applied to the LCD, even when all "White" data sent to the screen. Similar size compared to bright dot.
		White dot (Circular/foreign particle)	Pixel works electrically, however, circular/foreign particle makes dot appear to be "on" even when all "Black" data is sent to the screen.
		Adjacent dot	Adjacent dot defect is defined as two or more bright dot defects or black dot defects. 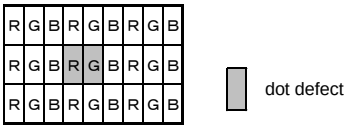 dot defect
	External inspection	Bubble, Scratch, Foreign particle (Polarizer, Cell, Backlight)	Visible operating (all pixels "Black" or "White") and non operating.
		Appearance inspection	Does not satisfy the value at the spec.
	Others	CFL wires	Damaged to the CFL wires, connector, pin, functional failure or appearance failure.
	Definition of size	Definition of circle size 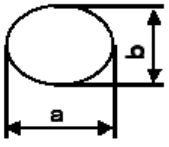 d＝(a＋b)/2	Definition of linear size 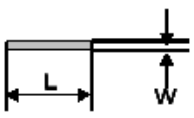

2) Standard

<table>
<tr><th colspan="2">Classification</th><th colspan="2">Inspection item</th><th>Judgement standard</th></tr>
<tr><td rowspan="6">Defect (in LCD glass)</td><td rowspan="5">Dot defect</td><td colspan="2">Bright dot defect</td><td>Acceptable number : 4
Bright dot spacing : 5 mm or more</td></tr>
<tr><td colspan="2">Black dot defect</td><td>Acceptable number : 5
Black dot spacing : 5 mm or more</td></tr>
<tr><td rowspan="2">2 dot join</td><td>Bright dot defect</td><td>Acceptable number : 2</td></tr>
<tr><td>Black dot defect</td><td>Acceptable number : 3</td></tr>
<tr><td colspan="2">3 or more dots join</td><td>Acceptable number : 0</td></tr>
<tr><td colspan="2">Total dot defects</td><td>Acceptable number : 5 Max</td></tr>
<tr><td>Others</td><td colspan="2">White dot, Dark dot (Circle)</td><td>
<table>
<tr><th>Size (mm)</th><th>Acceptable number</th></tr>
<tr><td>d ≦ 0.2</td><td>(Neglected)</td></tr>
<tr><td>0.2 ＜ d ≦ 0.4</td><td>5</td></tr>
<tr><td>0.4 ＜ d ≦ 0.5</td><td>3</td></tr>
<tr><td>0.5 ＜ d</td><td>0</td></tr>
</table>
</td></tr>
<tr><td rowspan="4">External inspection (Defect on Polarizer or between Polarizer and LCD glass)</td><td colspan="2">Polarizer (Scratch)</td><td>
<table>
<tr><th>Width (mm)</th><th>Length (mm)</th><th>Acceptable number</th></tr>
<tr><td>W ≦ 0.1</td><td>－</td><td>(Neglected)</td></tr>
<tr><td rowspan="2">0.1 ＜ W ≦ 0.3</td><td>L ≦ 5.0</td><td>(Neglected)</td></tr>
<tr><td>5.0 ＜ L</td><td>0</td></tr>
<tr><td>0.3 ＜ W</td><td>－</td><td>0</td></tr>
</table>
</td></tr>
<tr><td colspan="2">Polarizer (Bubble)</td><td>
<table>
<tr><th>Size (mm)</th><th>Acceptable number</th></tr>
<tr><td>d ≦ 0.2</td><td>(Neglected)</td></tr>
<tr><td>0.2 ＜ d ≦ 0.3</td><td>5</td></tr>
<tr><td>0.3 ＜ d ≦ 0.5</td><td>3</td></tr>
<tr><td>0.5 ＜ d</td><td>0</td></tr>
</table>
</td></tr>
<tr><td colspan="2">Foreign particle (Circular shape)</td><td>
<table>
<tr><th>Size (mm)</th><th>Acceptable number</th></tr>
<tr><td>d ≦ 0.2</td><td>(Neglected)</td></tr>
<tr><td>0.2 ＜ d ≦ 0.4</td><td>5</td></tr>
<tr><td>0.4 ＜ d ≦ 0.5</td><td>3</td></tr>
<tr><td>0.5 ＜ d</td><td>0</td></tr>
</table>
</td></tr>
<tr><td colspan="2">Foreign particle (Linear shape)
Scratch</td><td>
<table>
<tr><th>Width (mm)</th><th>Length (mm)</th><th>Acceptable number</th></tr>
<tr><td>W ≦ 0.03</td><td>－</td><td>(Neglected)</td></tr>
<tr><td rowspan="3">0.03 ＜ W ≦ 0.1</td><td>L ≦ 2.0</td><td>(Neglected)</td></tr>
<tr><td>2.0 ＜ L ≦ 4.0</td><td>3</td></tr>
<tr><td>4.0 ＜ L</td><td>0</td></tr>
<tr><td>0.1 ＜ W</td><td>－</td><td>(According to circular shape)</td></tr>
</table>
</td></tr>
</table>

<table>
<tr><th>Inspection item</th><th>Judgement standard</th></tr>
<tr><td>Scratch,
Foreign particle
(Touch screen portion)</td><td>(W = Width, L = Length, D = Diameter = (major axis＋minor axis)/ 2)
<table>
<tr><th>Item</th><th>Width(mm)</th><th>Length(mm)</th><th>Acceptable number</th></tr>
<tr><td rowspan="4">Scratch</td><td>d ≦ 0.03</td><td>L ≦ 20</td><td>Neglected</td></tr>
<tr><td>0.03 ＜ d ≦ 0.05</td><td>L ≦ 10</td><td>2pcs within φ20mm</td></tr>
<tr><td>0.05 ＜ d ≦ 0.08</td><td>L ≦ 6</td><td>2pcs within φ20mm</td></tr>
<tr><td>0.08 ＜ d ≦ 0.1</td><td>L ≦ 4</td><td>1pcs within φ30mm</td></tr>
<tr><td rowspan="2">Foreign
(line like)</td><td>W ≦ 0.05</td><td>Neglected</td><td>Neglected</td></tr>
<tr><td>0.05 ＜ W ≦ 0.1</td><td>L ≦ 5</td><td>2pcs within ϕ30mm</td></tr>
<tr><td rowspan="2">Foreign
(circle like)</td><td colspan="2">D ≦ 0.2</td><td>Neglected</td></tr>
<tr><td colspan="2">0.2 ＜ D ≦ 0.3</td><td>2pcs within ϕ30mm</td></tr>
</table>
Above are applied to the visible area.
Unless there are foreign particle and damage affected seriously to the electrical performance out of the active area, we approve of this product.</td></tr>
<tr><td>Glass crack
(Touch screen portion)</td><td>
<table>
<tr><th>Item</th><th colspan="3">Size (mm)</th><th>Acceptable number</th></tr>
<tr><td>Corner crack</td><td rowspan="3"> 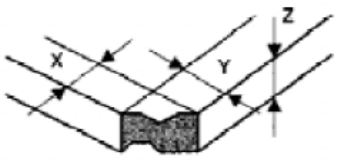 </td><td>X</td><td>≦3</td><td rowspan="3">2 pcs
/panel</td></tr>
<tr><td>Y</td><td>≦3</td></tr>
<tr><td>Z</td><td>＜t</td></tr>
<tr><td>Crack in other area than in corner</td><td rowspan="3"> 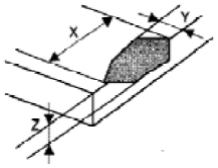 </td><td>X</td><td>≦5</td><td rowspan="3">2 pcs
/side</td></tr>
<tr><td>Y</td><td>≦1.5</td></tr>
<tr><td>Z</td><td>＜t</td></tr>
<tr><td>Progressive crack</td><td colspan="3"> 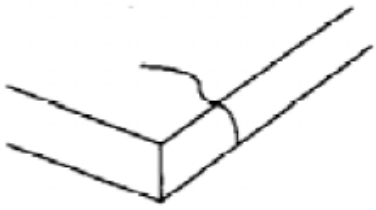 </td><td>0 pcs
(NG even 1pcs)</td></tr>
</table>
</td></tr>
</table>