Quick Start Guide for Demo Board DC418

DC418 is an isolated triple output power supply based on the LT1737CS high power isolated flyback controller IC. This demo board is intended to provide power to data acquisition cards in industrial control applications. The input to this demo board is 8–32 Volts DC and there are three outputs. The outputs are +5V at 0–200mA, +15V at 0–100mA and –15V at 0–100mA. The isolation between the primary and the secondary is 1500VDC. Regulation of the output voltage is within 5% for all line voltages with any combination of loads between 10 and 100%. In the event that one output is totally unloaded and both other outputs are fully loaded output regulation on the unloaded output is within 7%.

Quick Start Procedure

Refer to Figure 1 for proper measurement equipment setup and follow the procedure below:

Input Side

1. Connect the positive output of the power source (8–36V, 10W) to VIN+.
2. Connect the negative output of the power source to the input GND terminal.

   Optional: Add an ammeter in series with the power supply (1A full scale).

   Optional: Connect a voltmeter across the input terminals.

   Optional: If you want to be able to turn the board on and off, connect a switch between the GND and the $\overline{SD}$ pins.

Output Side

3. Connect voltmeters between the COM and output terminals.
4. Connect ammeters in series with the loads on the outputs.
5. Return all the loads to the COM terminal.

Once all the connections are made, turn on the power source and measure the performance of the board.

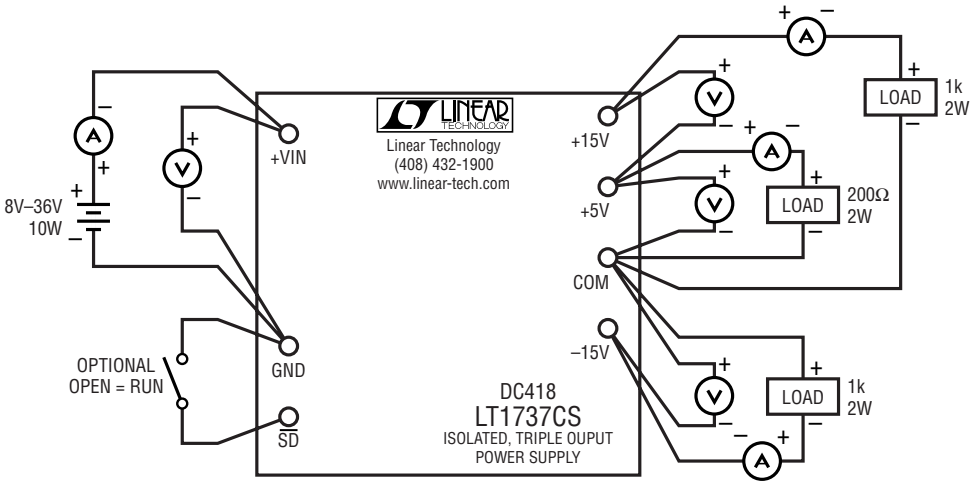

Figure 1. Proper Measurement Equipment Setup

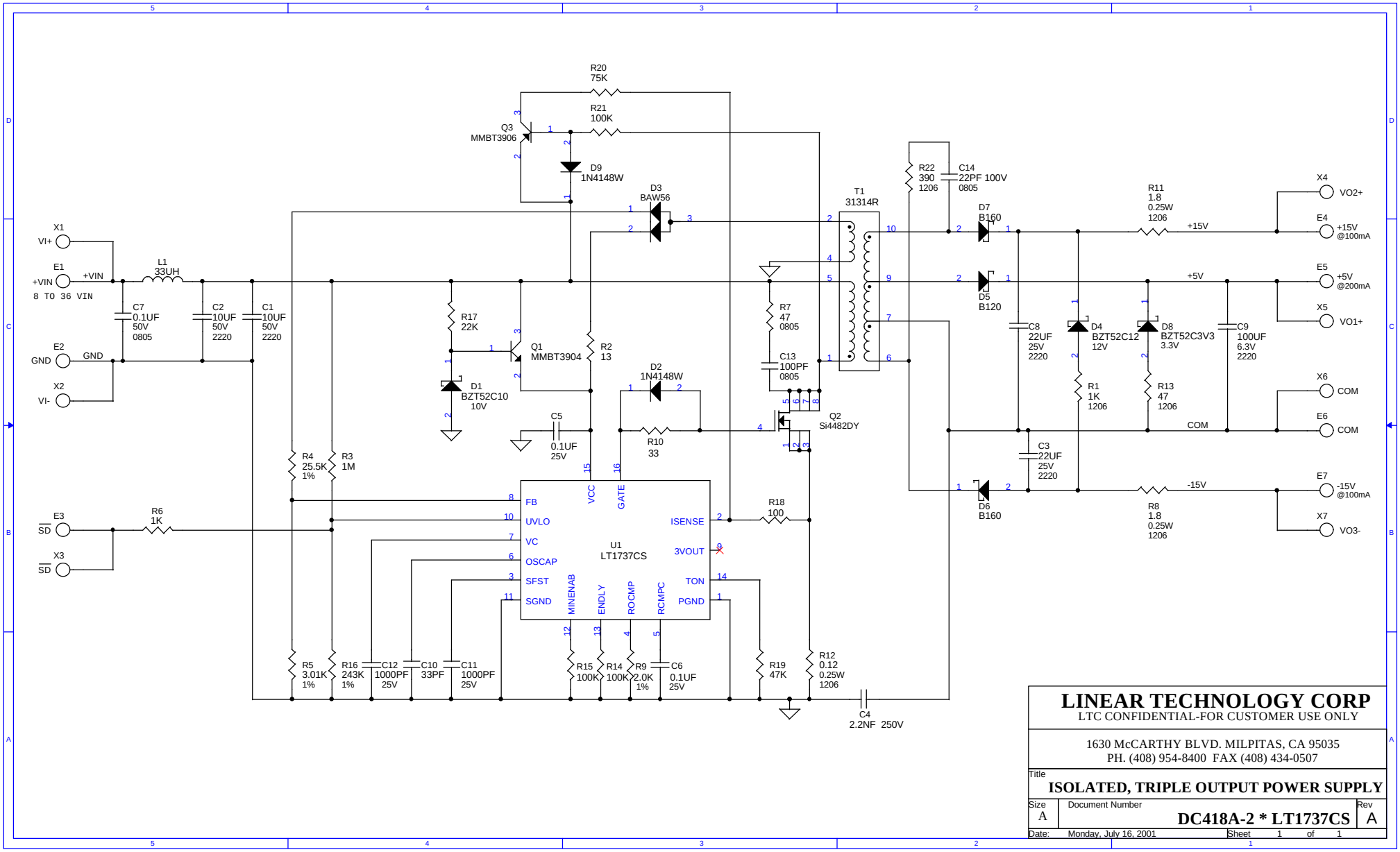

LINEAR TECHNOLOGY CORP

LTC CONFIDENTIAL-FOR CUSTOMER USE ONLY

1630 McCARTHY BLVD. MILPITAS, CA 95035
PH. (408) 954-8400 FAX (408) 434-0507

Title

ISOLATED, TRIPLE OUTPUT POWER SUPPLY

Size	Document Number	Rev
A	DC418A-2 * LT1737CS	A

Date: Monday, July 16, 2001 Sheet 1 of 1

BILL OF MATERIALS
DC418A-2
6/16/2005
4:17 PM

Item	Qty	Reference	Part Description	Manufacture / Part #
1	2	C1,C2	CAP., 10UF 50V,2220	TDK C5750X5R1H106M
2	2	C3,C8	CAP., 22UF 25V,2220	TDK C5750X5R1E226M
3	1	C4	CAP., 2.2NF 250V,+/-10%	MURATA GHM3045X7R222K-GC
4	2	C5,C6	CAP., Y5V 0.1UF 25V,0603	AVX 06033G104ZAT1A
5	1	C7	CAP., Y5V 0.1UF 50V,0805	AVX 08055G104ZAT1A
6	1	C9	CAP., 100UF 6.3V,2220	TDK C5750X5R0J107MT
7	1	C10	CAP., NPO 33PF 50V	AVX 06035A330MAT1A
8	2	C11,C12	CAP., X7R 1000PF 50V	AVX 06035C102MAT1A
9	1	C13	CAP., NPO 100PF 50V	AVX 08055A101MAT1A
10	1	C14	CAP., NPO 22PF 100V	AVX 08051A220MAT1A
11	1	D1	ZDIODE, 10V 350mW, BZT52C10, SOD123	DIODES INC. BZT52C10-7
12	2	D2,D9	DIODE, 75V 500mA, 1N4148W, SOD123	DIODES INC. 1N4148W-7
13	1	D3	DIODE, BAW56, SOT23	DIODES INC. BAW56-7
14	1	D4	ZDIODE, 12V 350mW, BZT52C12, SOD123	DIODES INC. BZT52C12-7
15	1	D5	DIODE, 1A 20V, B120, SMA-DIODE	DIODES INC. B120-13
16	2	D6,D7	DIODE, 1A 60V, B160, SMA-DIODE	DIODES INC. B160-13
17	1	D8	ZDIODE, 3.3V 350mW, BZT52C3V3, SOD123	DIODES INC. BZT52C3V3-7
18	7	E1-E7	TP, TURRET, .094"	MILL-MAX 2501-2
19	1	L1	IND, 33UH, DO1608C-332	COILCRAFT DO1608C-332
20	1	Q1	TRANSISTOR, NPN,MMBT3904, SOT23	DIODES MMBT3904-7
21	1	Q2	TRANSISTOR, Si4482DY,SO8	SILICONIX Si4482DY
22	1	Q3	TRANSISTOR, PNP,MMBT3906, SOT23	DIODES MMBT3906-7
23	1	R1	RES, CHIP 1K, 5%,1206	AAC CR18-102JM
24	1	R2	RES, CHIP 13, 5%,0603	AAC CR16-130JM
25	1	R3	RES, CHIP 1M, 5%,0603	AAC CR16-105JM
26	1	R4	RES, CHIP 25.5K, 1%,0603	AAC CR16-2552FM
27	1	R5	RES, CHIP 3.01K, 1%,0603	AAC CR16-3011FM
28	1	R6	RES, CHIP 1K, 5%,0603	AAC CR16-102JM
29	1	R7	RES, CHIP 47, 5%,0805	AAC CR10-470JM
30	2	R8,R11	RES, CHIP 1.8, .25W, 5%,1206	AAC CR18-1R8JM
31	1	R9	RES, CHIP 2.0K, 5%,0603	AAC CR16-202JM
32	1	R10	RES, CHIP 33, 5%,0603	AAC CR16-330JM
33	1	R12	RES., CHIP 0.12 1/4W 1%, 1206	IRC, LR1206-01-R120-F
34	1	R13	RES, CHIP 47, 5%,1206	AAC CR18-470JM
35	3	R14,R15,R21	RES, CHIP 100K, 5%,0603	AAC CR16-104JM
36	1	R16	RES, CHIP 243K, 1%,0603	AAC CR16-2433FM
37	1	R17	RES, CHIP 22K, 5%,0603	AAC CR16-223JM
38	1	R18	RES, CHIP 100, 5%,0603	AAC CR16-101JM
39	1	R19	RES, CHIP 47K, 5%,0603	AAC CR16-473JM
40	1	R20	RES, CHIP 75K, 5%,0603	AAC CR16-753JM
41	1	R22	RES, CHIP 390, 5%,1206	AAC CR18-391JM
42	1	T1	TRANSFROMER, 31314R	MIDCOM 31314R
43	1	U1	IC, LT1737CS, SO16	LINEAR TECH. LT1737IS
44	7	X1-X7	PIN 0.040" X 0.32" TIN, PAD080-043	KEYSTONE 1425-2
		NOTES: X1-X7 ARE MOUNTED ON BOTTOM SIDE.		