LAN8820/LAN8820I

RGMII 10/100/1000 Ethernet Transceiver with HP Auto-MDIX Support

Highlights

- Single-Chip Ethernet Physical Layer Transceiver (PHY)
- Compliant with IEEE 802.3ab (1000BASE-T), IEEE 802.3u (Fast Ethernet), and ISO 802-3/IEEE 802.3 (10BASE-T)
- HP Auto-MDIX support in accordance with IEEE 802.3ab specification at 10/100/1000 Mbps operation
- Miniature 56-pin QFN lead-free RoHS compliant package with RGMII (8 x 8 x 0.85 mm height)
- Implements Reduced Power Operating Modes

Target Applications

- Set-Top Boxes
- Networked Printers and Servers
- Test Instrumentation
- LAN on Motherboard
- Embedded Telecom Applications
- Video Record/Playback Systems
- Cable Modems/Routers
- DSL Modems/Routers
- Digital Video Recorders
- IP and Video Phones
- Wireless Access Points
- Digital Televisions
- Digital Media Adapters/Servers
- Gaming Consoles
- POE Applications

Key Benefits

- High-Performance 10/100/1000 Ethernet Transceiver
  - Compliant with IEEE 802.3ab (1000BASE-T)
  - Compliant with IEEE 802.3/802.3u (Fast Ethernet)
  - Compliant with ISO 802-3/IEEE 802.3 (10BASE-T)
  - 10BASE-T, 100BASE-TX and 1000BASE-T support
  - Loop-back modes
  - Auto-negotiation (NEXT page support)
  - Automatic polarity detection and correction
  - Link status change wake-up detection
  - Vendor specific register functions
  - Supports reduced pin count RGMII interface
    - Controlled impedance outputs
    - Supports RGMII ID mode
  - Three status LED outputs
  - Compliant with IEEE 802.3-2005 standards
    - RGMII pins tolerant to 3.6V
  - Integrated DSP implements adaptive equalizer, echo cancelers, and crosstalk cancelers
  - Efficient digital baseline wander correction
- Power and I/Os
  - Various low power modes
  - 2.5V I/O supply
- Miscellaneous Features
  - IEEE 1149.1 (JTAG) boundary scan
  - Multiple clock options - 25MHz crystal or 25MHz single-ended clock
- Packaging
  - 56-pin QFN (8x8 mm) RoHS compliant package with RGMII
- Environmental
  - Commercial temperature range (0°C to +70°C)
  - Industrial temperature range (-40°C to +85°C)

© 2009-2016 Microchip Technology Inc.

TO OUR VALUED CUSTOMERS

It is our intention to provide our valued customers with the best documentation possible to ensure successful use of your Microchip products. To this end, we will continue to improve our publications to better suit your needs. Our publications will be refined and enhanced as new volumes and updates are introduced.

If you have any questions or comments regarding this publication, please contact the Marketing Communications Department via E-mail at **docerrors@microchip.com**. We welcome your feedback.

Most Current Data Sheet

To obtain the most up-to-date version of this data sheet, please register at our Worldwide Web site at:

http://www.microchip.com

You can determine the version of a data sheet by examining its literature number found on the bottom outside corner of any page. The last character of the literature number is the version number, (e.g., DS30000000A is version A of document DS30000000).

Errata

An errata sheet, describing minor operational differences from the data sheet and recommended workarounds, may exist for current devices. As device/documentation issues become known to us, we will publish an errata sheet. The errata will specify the revision of silicon and revision of document to which it applies.

To determine if an errata sheet exists for a particular device, please check with one of the following:

- Microchip's Worldwide Web site; http://www.microchip.com
- Your local Microchip sales office (see last page)

When contacting a sales office, please specify which device, revision of silicon and data sheet (include -literature number) you are using.

Customer Notification System

Register on our web site at **www.microchip.com** to receive the most current information on all of our products.

© 2009-2016 Microchip Technology Inc.

Table of Contents

1.0 Introduction 4
2.0 Pin Description and Configuration 5
3.0 Functional Description 13
4.0 Register Descriptions 34
5.0 Operational Characteristics 60
6.0 Package Outline 76
Appendix A: Data Sheet Revision History 78
The Microchip Web Site 80
Customer Change Notification Service 80
Customer Support 80
Product Identification System 81

1.0 INTRODUCTION

The LAN8820/LAN8820i is a low-power 10BASE-T/100BASE-TX/1000BASE-T Gigabit Ethernet physical layer (PHY) transceiver that is fully compliant with the IEEE 802.3 and 802.3ab standards.

The LAN8820/LAN8820i can be configured to communicate with an Ethernet MAC via the standard RGMII interface. It contains a full-duplex transceiver for 1000 Mbps operation on four pairs of category 5 or better balanced twisted pair cable. Per IEEE 802.3-2005 standards, all digital interface pins are tolerant to 3.6V.

The LAN8820/LAN8820i is configurable via hardware and software, supporting both IEEE 802.3-2005 compliant and vendor-specific register functions via SMI. The LAN8820/LAN8820i implements Auto-Negotiation to automatically determine the best possible speed and duplex mode of operation. HP Auto-MDIX support allows the use of direct connect or crossover cables.

An internal block diagram of the LAN8820/LAN8820i is shown in Figure 1-1. A typical system-level diagram is shown in Figure 1-2.

FIGURE 1-1: INTERNAL BLOCK DIAGRAM

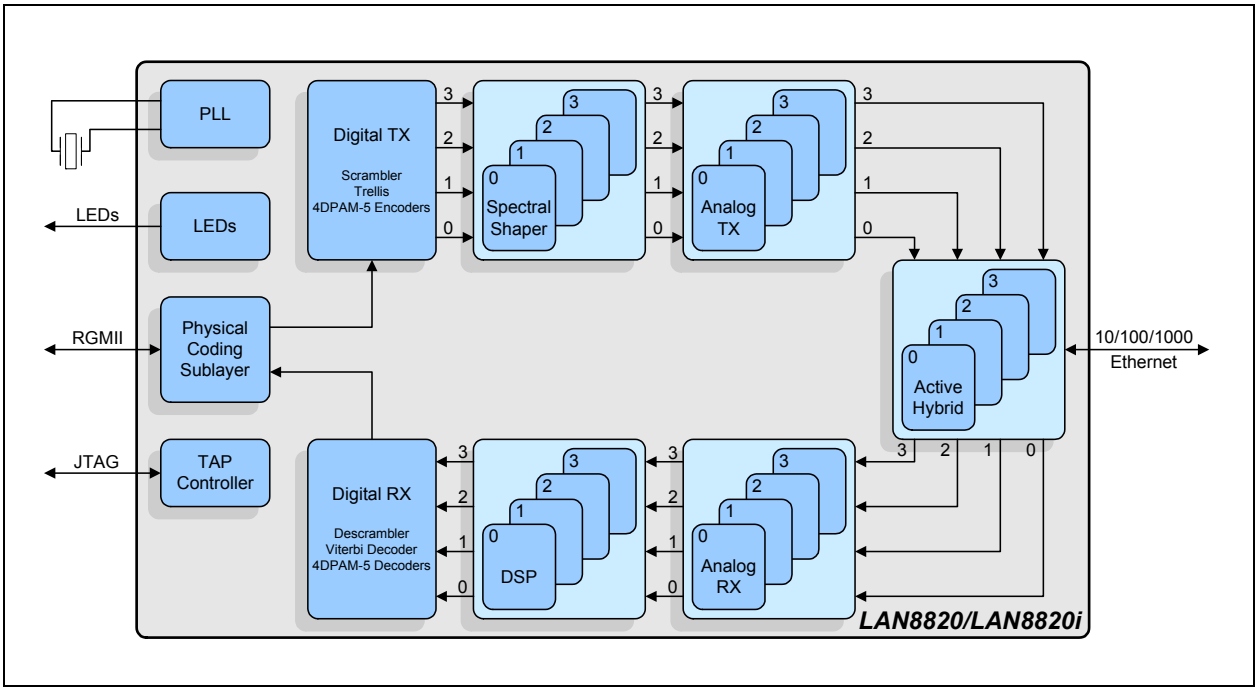

FIGURE 1-2: SYSTEM LEVEL BLOCK DIAGRAM

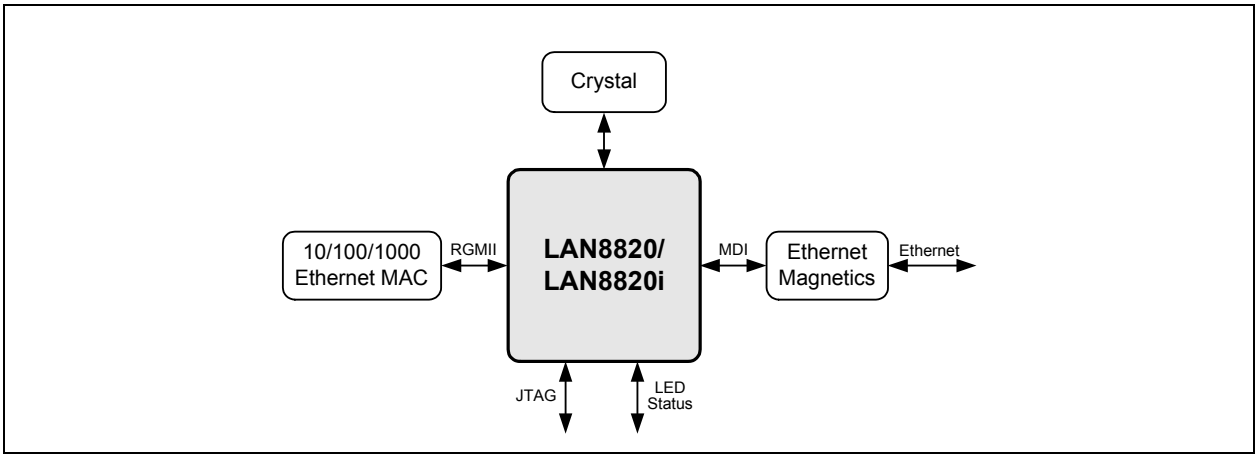

© 2009-2016 Microchip Technology Inc.

2.0 PIN DESCRIPTION AND CONFIGURATION

FIGURE 2-1: 56-QFN PIN ASSIGNMENTS (TOP VIEW)

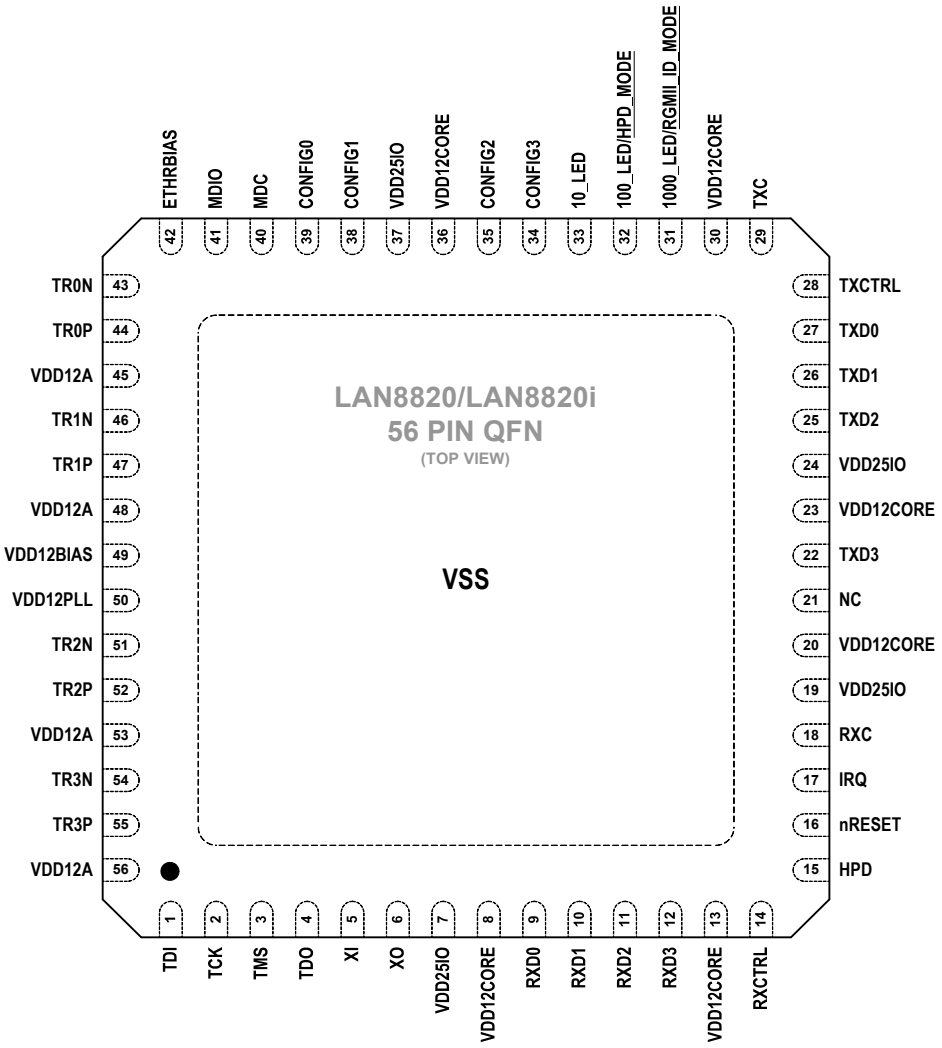

NOTE: Exposed pad (VSS) on bottom of package must be connected to ground

TABLE 2-1: RGMII INTERFACE PINS

Num Pins	Name	Symbols	Buffer Type	Description
1	Transmit Data 0	TXD0	IS (PD)	The MAC transmits data to the PHY using this signal.
1	Transmit Data 1	TXD1	IS (PD)	The MAC transmits data to the PHY using this signal.
1	Transmit Data 2	TXD2	IS (PD)	The MAC transmits data to the PHY using this signal.
1	Transmit Data 3	TXD3	IS (PD)	The MAC transmits data to the PHY using this signal.
1	Transmit Control	TXCTRL	IS (PD)	Indicates both the transmit data enable (TXEN) and transmit error (TXER) functions per the RGMII specification.
1	Transmit Clock	TXC	IS (PD)	Used to latch data from the MAC into the PHY. 1000BASE-T: 125MHz 100BASE-TX: 25MHz 10BASE-T: 2.5MHz
1	Receive Data 0	RXD0	O6	The PHY transfers data to the MAC using this signal.
1	Receive Data 1	RXD1	O6	The PHY transfers data to the MAC using this signal.
1	Receive Data 2	RXD2	O6	The PHY transfers data to the MAC using this signal.
1	Receive Data 3	RXD3	O6	The PHY transfers data to the MAC using this signal.
1	Receive Control	RXCTRL	O6	Indicates both the receive data valid (RXDV) and receive error (RXER) functions per the RGMII specification.
1	Receive Clock	RXC	O6	Used to transfer data to the MAC. 1000BASE-T: 125 MHz 100BASE-TX: 25 MHz 10BASE-T: 2.5 MHz

Note 2-1 Configuration strap values are latched on hardware reset. Configuration straps are identified by an underlined symbol name. Signals that function as configuration straps must be augmented with an external resistor when connected to a load. Refer to Section 3.8, "Configuration," on page 23 for additional information.

© 2009-2016 Microchip Technology Inc.

TABLE 2-2: SERIAL MANAGEMENT INTERFACE (SMI) PINS

Num Pins	Name	Symbols	Buffer Type	Description
1	SMI Clock	MDC	IS (PD)	Serial Management Interface clock.
1	SMI Data Input/ Output	MDIO	IS/O8 (PU)	Serial Management Interface data input/output.

TABLE 2-3: LED & CONFIGURATION PINS

Num Pins	Name	Symbols	Buffer Type	Description
1	10BASE-T Link LED Indicator	10_LED	O8	10BASE-T LED link indication. Refer to Section 3.9.1, "LEDs," on page 27 for additional information.
1	100BASE-TX Link LED Indicator	100_LED	O8	100BASE-TX LED link indication. Refer to Section 3.9.1, "LEDs," on page 27 for additional information.
	Hardware Power Down (HPD) Mode Configuration Strap	HPD_MODE	IS (PD)	This configuration strap is used to select the Hardware Power Down (HPD) mode. When pulled-up, the PLL is not disabled when HPD is asserted. When pulled-down, the PLL is disabled when HPD is asserted. Refer to Section 3.7.3, "Hardware Power-Down," on page 23 for additional information. See Note 2-2 for more information on configuration straps.
1	1000BASE-T Link LED Indicator	1000_LED	O8	1000BASE-T LED link indication. Refer to Section 3.9.1, "LEDs," on page 27 for additional information.
	RGMII ID Mode Enable Configuration Strap	RGMII_ID_MODE	IS (PD)	This configuration strap is used to configure the RGMII PHY TXC/RXC delay enable bit defaults. When pulled-up, the RGMII PHY TXC/RXC delays are enabled by default. When pulled-down, the RGMII PHY TXC/RXC delays are disabled be default. Refer to Section 3.3, "RGMII Interface," on page 18 for more information. See Note 2-2 for more information on configuration straps.
1	Configuration Input 0	CONFIG0	IS (PD)	This pin sets the PHYADD[1:0] bits of the 10/100 Special Modes Register on reset or power-up. It must be connected to VSS, 100_LED, 1000_LED, or VDD25IO. Refer to Section 3.8.1.2, "CONFIG[3:0] Configuration Pins," on page 24 for additional information.
1	Configuration Input 1	CONFIG1	IS (PD)	This pin sets the PAUSE bit of the Auto Negotiation Advertisement Register and PHYADD [2] bit of the 10/100 Special Modes Register on reset or power-up. It must be connected to VSS, 100_LED, 1000_LED, or VDD25IO. Refer to Section 3.8.1.2, "CONFIG[3:0] Configuration Pins," on page 24 for additional information.

TABLE 2-3: LED & CONFIGURATION PINS (CONTINUED)

Num Pins	Name	Symbols	Buffer Type	Description
1	Configuration Input 2	CONFIG2	IS (PD)	This pin sets the MOD[1:0] bits of the Extended Mode Control/Status Register on reset or power-up. It must be connected to VSS, 100_LED, 1000_LED, or VDD25IO. Refer to Section 3.8.1.2, "CONFIG[3:0] Configuration Pins," on page 24 for additional information.
1	Configuration Input 3	CONFIG3	IS (PD)	This pin sets the MOD[3] bit of the Extended Mode Control/Status Register on reset or power-up. It must be connected to 1000_LED. Refer to Section 3.8.1.2, "CONFIG[3:0] Configuration Pins," on page 24 for additional information.

Note 2-2 Configuration strap values are latched on hardware reset. Configuration straps are identified by an underlined symbol name. Signals that function as configuration straps must be augmented with an external resistor when connected to a load. Refer to Section 3.8, "Configuration," on page 23 for additional information.

TABLE 2-4: ETHERNET PINS

Num Pins	Name	Symbol	Buffer Type	Description
1	Ethernet TX/ RX Positive Channel 0	TR0P	AIO	Transmit/Receive Positive Channel 0.
1	Ethernet TX/ RX Negative Channel 0	TR0N	AIO	Transmit/Receive Negative Channel 0.
1	Ethernet TX/ RX Positive Channel 1	TR1P	AIO	Transmit/Receive Positive Channel 1.
1	Ethernet TX/ RX Negative Channel 1	TR1N	AIO	Transmit/Receive Negative Channel 1.
1	Ethernet TX/ RX Positive Channel 2	TR2P	AIO	Transmit/Receive Positive Channel 2.
1	Ethernet TX/ RX Negative Channel 2	TR2N	AIO	Transmit/Receive Negative Channel 2.
1	Ethernet TX/ RX Positive Channel 3	TR3P	AIO	Transmit/Receive Positive Channel 3.
1	Ethernet TX/ RX Negative Channel 3	TR3N	AIO	Transmit/Receive Negative Channel 3.
1	External PHY Bias Resistor	ETHRBIAS	AI	Used for the internal bias circuits. Connect to an external 8.06K 1.0% resistor to ground.

© 2009-2016 Microchip Technology Inc.

TABLE 2-5: JTAG PINS

Num Pins	Name	Symbol	Buffer Type	Description
1	JTAG Test Data Out	TDO	O8	JTAG (IEEE 1149.1) data output.
1	JTAG Test Data Input	TDI	IS (PU)	JTAG (IEEE 1149.1) data input. **Note:** When not used, tie this pin to VDD25IO.
1	JTAG Test Clock	TCK	IS (PD)	JTAG (IEEE 1149.1) test clock. **Note:** When not used, tie this pin to VSS.
1	JTAG Test Mode Select	TMS	IS (PU)	JTAG (IEEE 1149.1) test mode select. **Note:** When not used, tie this pin to VDD25IO.

TABLE 2-6: MISCELLANEOUS PINS

Num Pins	Name	Symbol	Buffer Type	Description
1	Crystal Input	XI	ICLK	External 25 MHz crystal input. **Note:** This pin can also be driven by a 25 MHz single-ended clock oscillator. When this method is used, XO should be left unconnected. Refer to Section 5.6, "Clock Circuit," on page 75 for additional information.
1	Crystal Output	XO	OCLK	External 25 MHz crystal output.
1	System Reset	nRESET	IS (PU)	This active-low pin allows external hardware to reset the device.
1	Interrupt Request	IRQ	O6	Programmable interrupt request. **Note:** When used, this pin requires an external 4.7K pull-up resistor.
1	Hardware Power Down	HPD	IS (PD)	When asserted, this pin places the device into Hardware Power Down (HPD) mode. Refer to Section 3.7.3, "Hardware Power-Down," on page 23 for additional information.
1	No Connect	NC	-	This pin must be left floating for normal device operation.

TABLE 2-7: POWER PINS

Num Pins	Name	Symbol	Buffer Type	Description
4	+2.5V I/O Power Supply Input	VDD25IO	P	+2.5V I/O power. Refer to Section 3.10, "Application Diagrams," on page 31 and the LAN8820/LAN8820i reference schematics for connection information.
6	Digital Core +1.2V Power Supply Input	VDD12CORE	P	Refer to Section 3.10, "Application Diagrams," on page 31 and the LAN8820/LAN8820i reference schematics for connection information.
4	Ethernet +1.2V Port Power Supply Input For Channels 0-3	VDD12A	P	Refer to Section 3.10, "Application Diagrams," on page 31 and the LAN8820/LAN8820i reference schematics for connection information.
1	Ethernet +1.2V Bias Power Supply Input	VDD12BIAS	P	Refer to Section 3.10, "Application Diagrams," on page 31 and the LAN8820/LAN8820i reference schematics for connection information.
1	Ethernet PLL +1.2V Power Supply Input	VDD12PLL	P	Refer to Section 3.10, "Application Diagrams," on page 31 and the LAN8820/LAN8820i reference schematics for connection information.
Note 2-3	Ground	VSS	P	Common Ground

Note 2-3 Exposed pad on package bottom (Figure 2-1).

© 2009-2016 Microchip Technology Inc.

TABLE 2-8: 56-QFN PIN ASSIGNMENTS

Pin Num	Pin Name	Pin Num	Pin Name	Pin Num	Pin Name	Pin Num	Pin Name
1	TDI	15	HPD	29	TXC	43	TR0N
2	TCK	16	nRESET	30	VDD12CORE	44	TR0P
3	TMS	17	IRQ	31	1000_LED/ RGMII_ID_MODE	45	VDD12A
4	TDO	18	RXC	32	100_LED/ HPD_MODE	46	TR1N
5	XI	19	VDD25IO	33	10_LED	47	TR1P
6	XO	20	VDD12CORE	34	CONFIG3	48	VDD12A
7	VDD25IO	21	NC	35	CONFIG2	49	VDD12BIAS
8	VDD12CORE	22	TXD3	36	VDD12CORE	50	VDD12PLL
9	RXD0	23	VDD12CORE	37	VDD25IO	51	TR2N
10	RXD1	24	VDD25IO	38	CONFIG1	52	TR2P
11	RXD2	25	TXD2	39	CONFIG0	53	VDD12A
12	RXD3	26	TXD1	40	MDC	54	TR3N
13	VDD12CORE	27	TXD0	41	MDIO	55	TR3P
14	RXCTRL	28	TXCTRL	42	ETHRBIAS	56	VDD12A
EXPOSED PAD MUST BE CONNECTED TO VSS							

2.1 Buffer Types

TABLE 2-9: BUFFER TYPES

Buffer Type	Description
IS	Schmitt-triggered input.
O6	Output with 6 mA sink and 6 mA source.
O8	Output with 8 mA sink and 8 mA source.
PU	50uA (typical) internal pull-up. Unless otherwise noted in the pin description, internal pull-ups are always enabled. **Note:** Internal pull-up resistors prevent unconnected inputs from floating. Do not rely on internal resistors to drive signals external to the device. When connected to a load that must be pulled high, an external resistor must be added.
PD	50uA (typical) internal pull-down. Unless otherwise noted in the pin description, internal pull-downs are always enabled. **Note:** Internal pull-down resistors prevent unconnected inputs from floating. Do not rely on internal resistors to drive signals external to the device. When connected to a load that must be pulled low, an external resistor must be added.
AI	Analog input.
AIO	Analog bi-directional.
ICLK	Crystal oscillator input pin.
OCLK	Crystal oscillator output pin.
P	Power pin.

Note 1: The digital signals are not 5V tolerant. Refer to Section 5.1, "Absolute Maximum Ratings*," on page 60 for additional buffer information.

© 2009-2016 Microchip Technology Inc.

3.0 FUNCTIONAL DESCRIPTION

This chapter provides functional descriptions of the various device features. These features have been categorized into the following sections:

- Auto-negotiation
- HP Auto-MDIX
- RGMII Interface
- Serial Management Interface (SMI)
- Interrupt Management
- Resets
- Power-Down modes
- Configuration
- Miscellaneous Functions
- Application Diagrams

3.1 Auto-negotiation

The purpose of the auto-negotiation function is to automatically configure the PHY to the optimum link parameters based on the capabilities of its link partner. Auto-negotiation is a mechanism for exchanging configuration information between two link-partners and automatically selecting the highest performance mode of operation supported by both sides. Auto-negotiation is fully defined in clause 28 and clause 40 of the IEEE 802.3 specification.

Once auto-negotiation has completed, information about the resolved link can be passed back to the controller via the integrated Serial Management Interface (SMI). The results of the negotiation process are reflected in the Speed Indication field of the PHY Special Control / Status Register as well as the Auto Negotiation Link Partner Ability Register.

The advertised capabilities of the PHY are stored in Auto Negotiation Advertisement Register. The defaults advertised by the device are determined as described in Section 3.8.1.2.2, "Configuring the Mode of Operation (CONFIG[3:2]), " on page 26.

The auto-negotiation protocol is a purely physical layer activity and proceeds independently of the MAC controller. When enabled, auto-negotiation is started by the occurrence of one of the following events:

- Hardware reset
- Software reset
- Power-down reset
- Link status down
- Setting the Restart Auto-Negotiate bit of the Basic Control Register

On detection of one of these events, the device begins auto-negotiation by transmitting bursts of Fast Link Pulses (FLP). The data transmitted by an FLP burst is known as a “Link Code Word.” This exchange of information allows link partners to determine the Highest Common Ability (HCD).

Once a capability match has been determined, the link code words are repeated with the acknowledge bit set. Any difference in the main content of the link code words at this time will cause auto-negotiation to re-start. Auto-negotiation will also re-start if all of the required FLP bursts are not received.

Writing the 100BASE-TX Full Duplex, 100BASE-TX, 10BASE-T Full Duplex, and 10BASE-T bits of the Auto Negotiation Advertisement Register allows software control of the advertised capabilities. However, writing the Auto Negotiation Advertisement Register does not automatically re-start auto-negotiation. The Restart Auto-Negotiate bit of the Basic Control Register must be set before the new abilities will be advertised. Auto-negotiation can also be disabled via software by clearing the Auto-Negotiation Enable bit of the Basic Control Register.

Auto-Negotiation also resolves the Master/Slave clocking relationship between two PHYs for a 1000BASE-T link. Refer to Section 3.1.4, "Master/Slave," on page 14 for additional information.

3.1.1 RESTARTING AUTO-NEGOTIATION

Auto-negotiation can be restarted at any time by using the Restart Auto-Negotiate bit of the Basic Control Register. Auto-negotiation will also re-start if the link is broken at any time. A broken link is caused by signal loss. This may occur because of a cable break, or because of an interruption in the signal transmitted by the Link Partner. Auto-negotiation resumes in an attempt to determine the new link configuration.

If the management entity restarts Auto-negotiation by writing to the Restart Auto-Negotiate bit, the device will respond by stopping all transmission/receiving operations. Auto-negotiation will restart after approximately 1200 mS. The Link Partner will have also dropped the link and will resume auto-negotiation.

3.1.2 DISABLING AUTO-NEGOTIATION

Auto-negotiation can be disabled via software by clearing the Auto-Negotiation Enable bit of the Basic Control Register. The device will then force its speed of operation to reflect the information in the Speed Select[1], Speed Select[0], and Duplex Mode bits of the Basic Control Register. These bits are ignored when auto-negotiation is enabled.

3.1.3 PARALLEL DETECTION

If the LAN8820/LAN8820i is connected to a device lacking the ability to auto-negotiate (for example, no FLPs are detected), it is able to determine the speed of the link based on either 100M MLT-3 symbols or 10M Normal Link Pulses. In this case, the link is presumed to be half-duplex per the IEEE standard. This ability is known as “Parallel Detection”. This feature ensures inter operability with legacy link partners.

The Ethernet MAC has access to information regarding parallel detect via the Auto Negotiation Expansion Register. If a link is formed via parallel detection, the Link Partner Auto-Negotiation Able bit of the Auto Negotiation Expansion Register is cleared to indicate that the Link Partner is not capable of auto-negotiation. If a fault occurs during parallel detection, the Parallel Detection Fault bit of this register is set.

The Auto Negotiation Link Partner Ability Register is updated with information from the link partner which is coded in the received FLPs. If the Link Partner is not auto-negotiation capable, then the Auto Negotiation Link Partner Ability Register is updated after completion of parallel detection to reflect the speed capability of the Link Partner.

Parallel detect cannot be used to establish Gigabit Ethernet links because echo cancellation and signal recovery on a Gigabit Ethernet link requires resolution of the Master/Slave clock relationship, which requires the exchange of FLPs.

3.1.4 MASTER/SLAVE

In 1000BASE-T, one of the two link partner devices must be configured as Master and the other as Slave. The Master device transmits data using the local clock, while the Slave device uses the clock recovered from incoming data.

The Master and Slave assignments are set using the configuration pins as described in Section 3.8.1.2.2, "Configuring the Mode of Operation (CONFIG[3:2]), on page 26 or by using the Master/Slave Manual Config Enable and Master/Slave Manual Config Value bits of the Master/Slave Control Register. If both the link partner and the local device are manually given the same Master/Slave assignment, an error will be indicated in the Master/Slave Configuration Fault bit of the Master/Slave Status Register.

Depending on the link partner configuration, the manual Master/Slave mode can be resolved to sixteen possible outcomes, as shown in Table 3-1.

TABLE 3-1: MASTER/SLAVE RESOLUTION FOR 1000BASE-T

LAN8820/LAN8820i Advertisement	Link Partner Advertisement	LAN8820/LAN8820i Result	Link Partner Result
Single-Port	Single-Port	M/S resolved by random seed	M/S resolved by random seed
Single-Port	Multi-Port	Slave	Master
Single-Port	Manual Master	Slave	Master
Single-Port	Manual Slave	Master	Slave
Multi-Port	Single-Port	Master	Slave
Multi-Port	Multi-Port	M/S resolved by random seed	M/S resolved by random seed
Multi-Port	Manual Master	Slave	Master
Multi-Port	Manual Slave	Master	Slave
Manual Master	Single-Port	Master	Slave

© 2009-2016 Microchip Technology Inc.

TABLE 3-1: MASTER/SLAVE RESOLUTION FOR 1000BASE-T (CONTINUED)

LAN8820/LAN8820i Advertisement	Link Partner Advertisement	LAN8820/LAN8820i Result	Link Partner Result
Manual Master	Multi-Port	Master	Slave
Manual Master	Manual Master	No Link	No Link
Manual Master	Manual Slave	Master	Slave
Manual Slave	Single-Port	Slave	Master
Manual Slave	Multi-Port	Slave	Master
Manual Slave	Manual Master	Slave	Master
Manual Slave	Manual Slave	No Link	No Link

3.1.5 MANUAL OPERATION

The device supports a manual (forced) operation for test purposes. In manual operation, the user sets the link speed (10Mbps or 100Mbps) and the duplex state (full or half).

Auto-negotiation must be disabled in order to manually configure the speed and the duplex. This may be accomplished using the configuration pins, as described in Section 3.8.1.2.2, "Configuring the Mode of Operation (CONFIG[3:2])," on page 26, or by using the Basic Control Register as described in Section 3.1.2, "Disabling Auto-negotiation," on page 14. For 10BASE-T and 100BASE-TX, the link state of the device is determined by the Speed Select[1], Speed Select[0], and Duplex Mode bits of the Basic Control Register. Manual operation at a link speed of 1000Mbps is not supported.

3.1.6 HALF VS. FULL-DUPLEX

Half-duplex operation relies on the CSMA/CD (Carrier Sense Multiple Access / Collision Detect) protocol to handle network traffic and collisions. In this mode, the internal carrier sense signal, CRS, responds to both transmit and receive activity. If data is received while the PHY is transmitting, a collision results.

In full-duplex mode, the PHY is able to transmit and receive data simultaneously and collision detection is disabled. In this mode, the internal CRS responds only to receive activity. In 10BASE-T and 100BASE-T mode, CRS is redefined to respond only to received activity. In 1000BASE-T, CRS is disabled.

Table 3-2 describes the behavior of the internal CRS bit under all receive/transmit conditions.

TABLE 3-2: CRS BEHAVIOR

Mode	Speed	Duplex	Activity	CRS Behavior (Note 3-1)
Manual	10 Mbps	Half-Duplex	Transmitting	Active
Manual	10 Mbps	Half-Duplex	Receiving	Active
Manual	10 Mbps	Full-Duplex	Transmitting	Low
Manual	10 Mbps	Full-Duplex	Receiving	Active
Manual	100 Mbps	Half-Duplex	Transmitting	Active
Manual	100 Mbps	Half-Duplex	Receiving	Active
Manual	100 Mbps	Full-Duplex	Transmitting	Low
Manual	100 Mbps	Full-Duplex	Receiving	Active
Auto-Negotiation	10 Mbps	Half-Duplex	Transmitting	Active

© 2009-2016 Microchip Technology Inc.

TABLE 3-2: CRS BEHAVIOR (CONTINUED)

Mode	Speed	Duplex	Activity	CRS Behavior (Note 3-1)
Auto-Negotiation	10 Mbps	Half-Duplex	Receiving	Active
Auto-Negotiation	10 Mbps	Full-Duplex	Transmitting	Low
Auto-Negotiation	10 Mbps	Full-Duplex	Receiving	Active
Auto-Negotiation	100 Mbps	Half-Duplex	Transmitting	Active
Auto-Negotiation	100 Mbps	Half-Duplex	Receiving	Active
Auto-Negotiation	100 Mbps	Full-Duplex	Transmitting	Low
Auto-Negotiation	100 Mbps	Full-Duplex	Receiving	Active

Note 3-1 The internal CRS signal operates in two modes: Active and Low. When in Active mode, the internal CRS will transition high and low upon line activity, where a high value indicates a carrier has been detected. In Low mode, the internal CRS stays low and does not indicate carrier detection.

3.2 HP Auto-MDIX

HP Auto-MDIX facilitates the use of CAT-5 (100BASE-T) media UTP interconnect cable without consideration of interface wiring scheme. If a user plugs in either a direct connect LAN cable, or a crossover patch cable, as shown in Figure 3-1, the Auto-MDIX PHY is capable of configuring the twisted pair pins for correct transceiver operation.

The internal logic of the device detects the TX and RX pins of the connecting device. It can automatically re-assign channel 0 and 1 if required to establish a link. In 1000BASE-T mode, it can re-assign channel 2 and 3. Crossover resolution precedes the actual auto-negotiation process that involves exchange of FLPs to advertise capabilities. Automatic MDI/MDIX is described in IEEE 802.3ab Clause 40, section 40.8.2. Since the RX and TX line pairs are interchangeable, special PCB design considerations are needed to accommodate the symmetrical magnetics and termination of an Auto-MDIX design.

Auto-MDIX is enabled by default, and can be disabled by the Auto MDIX Disable bit in the 10/100 Mode Control/Status Register. When Auto-MDIX is disabled, the TX and RX pins can be configured manually by the MDI/MDI-X 0:1 and MDI/MDI-X 2:3 bits in the Extended Mode Control/Status Register.

The device includes an advanced crossover resolution capability called Semi Crossover. This is an extension to HP Auto-MDIX that corrects for a cable with only two pairs crossed. If Semi Crossover is enabled, after the device has attempted to establish a link with all four signal pairs normal or crossed, it will attempt to establish a link with pairs 2/3 switched and 0/1 straight, and then with pairs 0/1 switched and pairs 2/3 straight. The Semi Crossover is enabled by default, and can be disabled by the Semi Crossover Enable bit in the 10/100 Mode Control/Status Register.

After resolution of crossed pairs is complete, using either HP Auto-MDIX or the Semi Crossover function, the MDI/MDI-X status is reported through the XOVER Resolution 0:1 and XOVER Resolution 2:3 bits of the User Status 2 Register.

© 2009-2016 Microchip Technology Inc.

FIGURE 3-1: CABLE CONNECTION TYPES: STRAIGHT-THROUGH, CROSSOVER, SEMI CROSSOVER

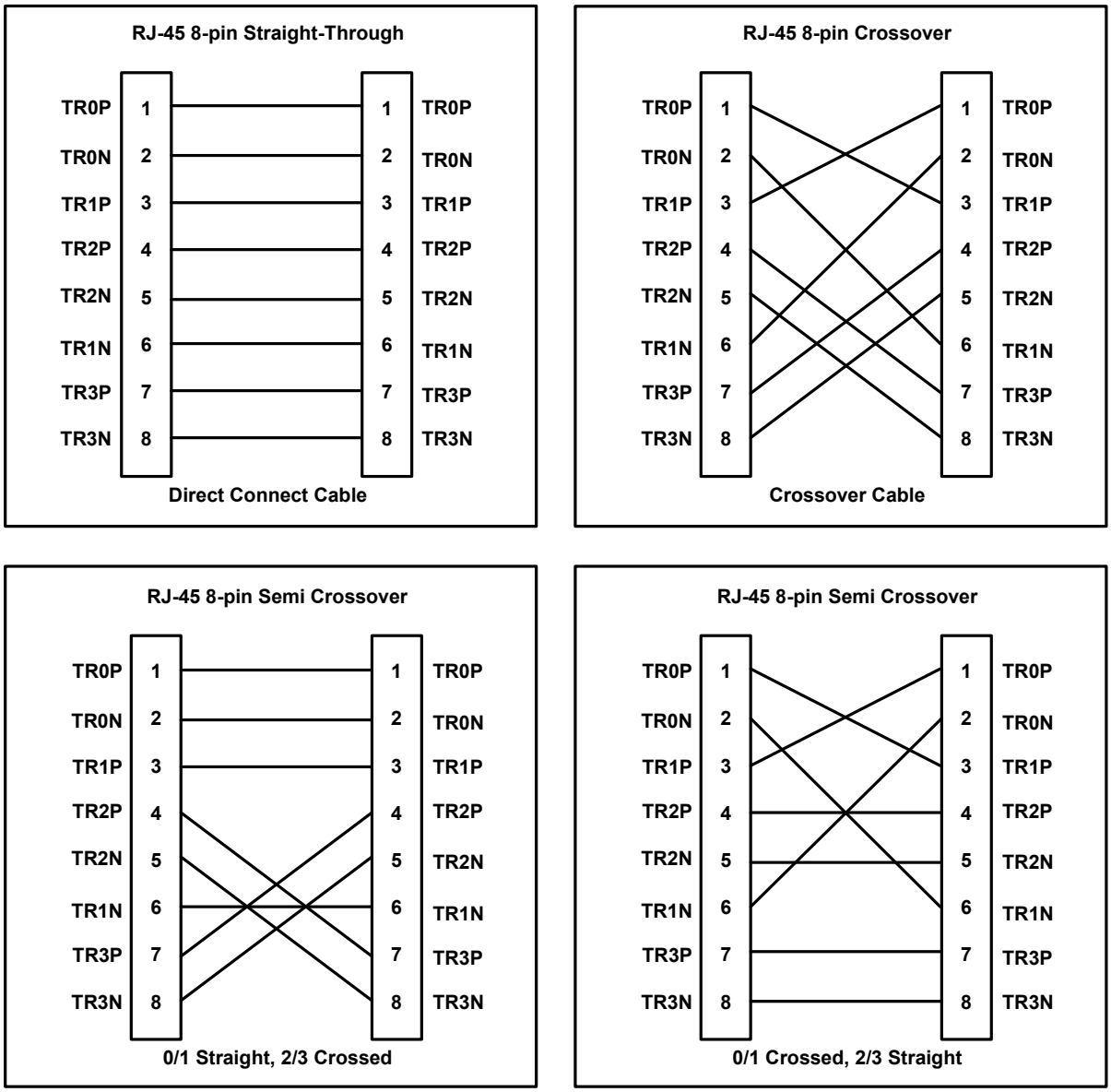

3.2.1 REQUIRED ETHERNET MAGNETICS

The magnetics selected for use with the device should be an Auto-MDIX style magnetic available from several vendors. Refer to Application Note 8.13 “Suggested Magnetics” for the latest qualified and suggested magnetics. Vendors and part numbers are provided in this application note.

3.3 RGMII Interface

The device communicates with an external MAC using the Reduced Gigabit Media Independent Interface (RGMII). The RGMII is compliant with the RGMII standard, and provides support for 1000BASE-T, 100BASE-TX, or 10BASE-T operation.

The RGMII consists of the RXC, RXD[3:0], RXCTRL, TXC, TXD[3:0] and TXCTRL signals. All transmission related signals, TXC, TXD[3:0] and TXCTRL, are generated by the MAC. The TXC transmit clock is used to synchronize the TXD[3:0] data and TXCTRL control signals. All reception related signals, RXC, RXD[3:0] and RXCTRL, are generated by the device. The RXC receive clock is used to synchronic the RXD[3:0] data and RXCTRL control signals.

The RGMII interface supports both Version 1.3 and Version 2.0 of the RGMII specification. Version 1.3 of the RGMII Specification requires a 1.5 to 2ns clock delay via a PCB trace delay. Version 2.0 of the RGMII Specification introduces the option of an on-chip Internal Delay (ID). These distinct RGMII modes of operation are referred to as “Non-ID Mode” and “ID Mode”, respectively, throughout the document. Refer to the RGMII specification for additional details.

In addition to the standard Non-ID and ID modes of operation, the device supports a hybrid mode of operation, for a total of 3 RGMII modes. These modes are summarized below:

Non-ID Mode - Per the RGMII specification, no internal delay is generated at the MAC or the device(PHY). External PCB trace delays are required to meet RGMII timing requirements.

ID Mode - Per the RGMII specification, an internal delay is generated on TXC at the MAC, and an ID is generated on RXC at the device(PHY). No PCB trace delay is required.

Hybrid Mode - In this mode, the device(PHY) will generate an ID on both TXC and RXC. This mode may be used to eliminate the PCB trace delay requirement when utilizing a non-ID MAC.

The RGMII mode is configured via the RGMII PHY TXC Delay Enable and RGMII PHY RXC Delay Enable bits of the Control / Status Indications Register (29.[9:8]). The default values of these bits are configured via the RGMII_ID_MODE configuration strap. Figure 3-2 details the RGMII mode configuration logic. For additional information on the RGMII_ID_MODE configuration strap, refer to Section 3.8.1.1, "Configuration Straps," on page 24.

FIGURE 3-2: RGMII MODE CONFIGURATION LOGIC

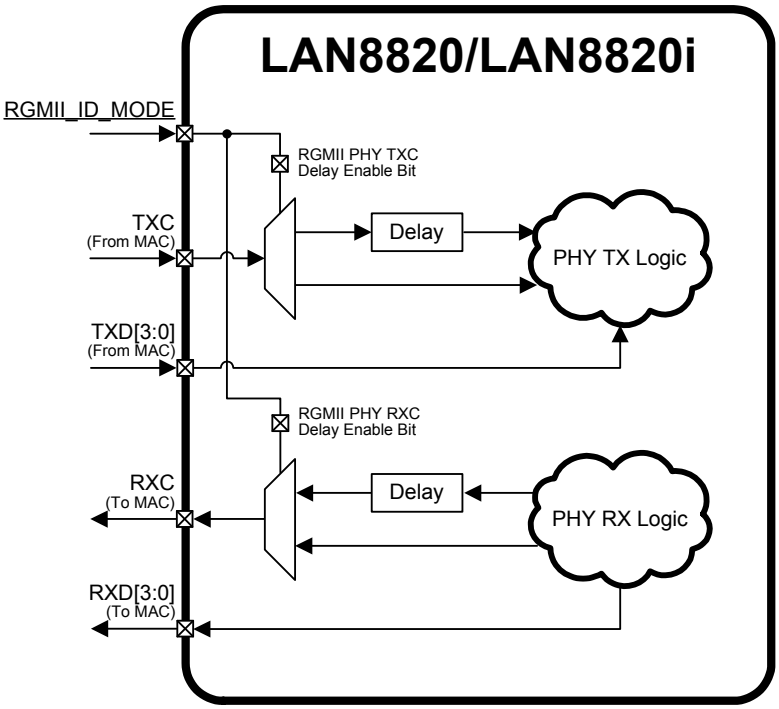

© 2009-2016 Microchip Technology Inc.

The various RGMII modes and their corresponding configuration settings are summarized in Figure 3-3.

FIGURE 3-3: RGMII MODES OF OPERATION

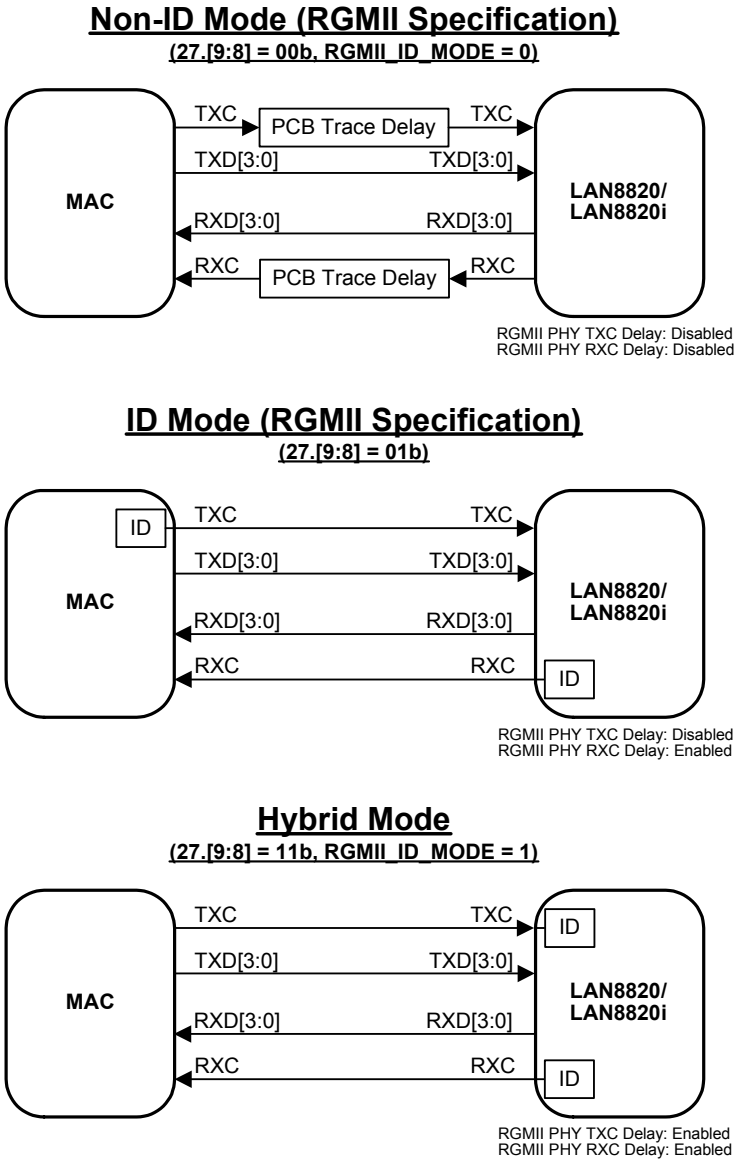

Note:	Strapping RGMII_ID_MODE high sets the device into Hybrid Mode. In order to set the device into ID Mode, the RGMII PHY TXC Delay Enable and RGMII PHY RXC Delay Enable bits of the Control / Status Indications Register (27.[9:8]) must be configured via software to 01b.

Timing information for the RGMII interface is provided in Section 5.5, "AC Specifications," on page 65. For additional information on the RGMII interface, refer to the RGMII specification.

3.3.1 MII ISOLATE MODE

The device may be configured to electrically isolate the RGMII pins by setting the Isolate bit of the Basic Control Register. In this mode, all MAC data interface output pins are HIGH and all MAC data interface input pins are ignored. In this mode, the SMI interface is kept active, allowing the MAC to access the SMI registers and generate interrupts. All MDI operations are halted while in isolate mode.

3.4 Serial Management Interface (SMI)

The Serial Management Interface is used to control the device and obtain its status. This interface supports the standard PHY registers required by Clause 22 of the 802.3 standard, as well as “vendor-specific” registers allowed by the specification. Non-supported registers (such as 11 to 14) will be read as hexadecimal “FFFF”. Device registers are detailed in Section 4.0, "Register Descriptions," on page 34.

At the system level, SMI provides 2 signals: MDIO and MDC. The MDC signal is an aperiodic clock provided by the station management controller (SMC). MDIO is a bi-directional data SMI input/output signal that receives serial data (commands) from the controller SMC and sends serial data (status) to the SMC. The minimum time between edges of the MDC is 160 ns. There is no maximum time between edges. The minimum cycle time (time between two consecutive rising or two consecutive falling edges) is 400 ns. These modest timing requirements allow this interface to be easily driven by the I/O port of a microcontroller.

The data on the MDIO line is latched on the rising edge of the MDC. The frame structure and timing of the data is shown in Figure 1-1 and Figure 1-2. The timing relationships of the MDIO signals are further described in Section 5.5.6, "SMI Timing," on page 73.

FIGURE 3-4: MDIO TIMING AND FRAME STRUCTURE - READ CYCLE

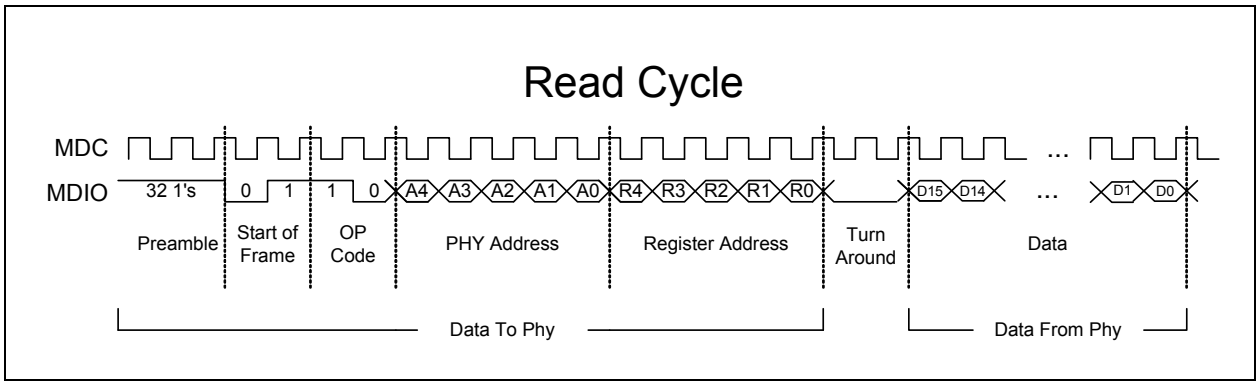

FIGURE 3-5: MDIO TIMING AND FRAME STRUCTURE - WRITE CYCLE

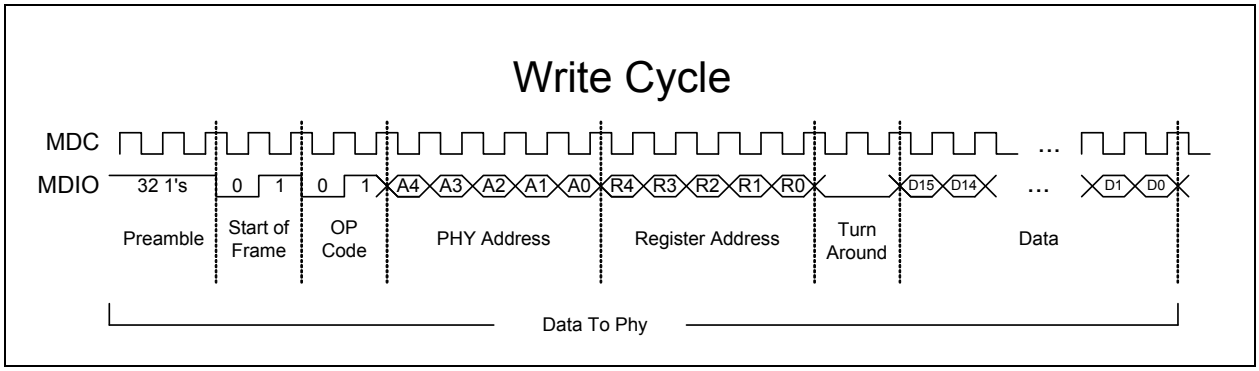

© 2009-2016 Microchip Technology Inc.

3.5 Interrupt Management

The device supports multiple interrupt capabilities which are not a part of the IEEE 802.3 specification. An active low asynchronous interrupt signal may be generated on the IRQ pin when selected events are detected, as configured by the Interrupt Mask Register.

To set an interrupt, the corresponding mask bit in the Interrupt Mask Register must be set (see Table 3-3). When the associated event occurs, the IRQ pin will be asserted. When the corresponding event to deassert IRQ is true, the IRQ pin will be deasserted. All interrupts are masked following a reset.

Note: Table 3-3 utilizes register index and bit number referencing in lieu of individual names. For example, “30.10” is used to reference bit 10 (transmitter elastic buffer overflow interrupt enable) of the Interrupt Mask Register (register index 30).

TABLE 3-3: INTERRUPT MANAGEMENT TABLE

Mask	Interrupt Source Flag		Interrupt Source		Event to Assert IRQ	Event to Deassert IRQ
30.15:11	29.15:11	RESERVED	-NA-	-NA-	-NA-	-NA-
30.10	29.10	Transmitter Elastic Buffer Overflow	-NA-	-NA- (Note 3-3)	Transmitter Elastic Buffer Overflow	Overflow condition resolved
30.9	29.9	Transmitter Elastic Buffer Underflow	-NA-	-NA- (Note 3-3)	Transmitter Elastic Buffer Underflow	Underflow condition resolved
30.8	29.8	Idle Error Count Overflow	10.7:0	Idle Error Count	Idle Error Count Overflow	Reading register 10
30.7	29.7	ENERGYON	17.1	ENERGYON	Rising 17.1 (Note 3-2)	Falling 17.1 or Reading register 29
30.6	29.6	Auto-Negotiation complete	1.5	Auto-Negotiate Complete	Rising 1.5	Falling 1.5 or Reading register 29
30.5	29.5	Remote Fault Detected	1.4	Remote Fault	Rising 1.4	Falling 1.4, or Reading register 1 or Reading register 29
30.4	29.4	Link Down	1.2	Link Status	Falling 1.2	Reading register 1 or Reading register 29
30.3	29.3	RESERVED	-NA-	-NA-	-NA-	-NA-
30.2	29.2	Parallel Detection Fault	6.4	Parallel Detection Fault	Rising 6.4	Falling 6.4 or Reading register 6, or Reading register 29 or Re-AutoNegotiate or Link down
30.1	29.1	Auto-Negotiation Page Received	6.1	Page Received	Rising 6.1	Falling of 6.1 or Reading register 6, or Reading register 29 Re-auto-negotiate, or Link Down.

Note 3-2 The ENERGYON bit of the 10/100 Mode Control/Status Register (17.1) defaults to “1” after a hardware reset. If no energy is detected before 256mS, the ENERGYON bit will be cleared. When ENERGYON is “0” and energy is detected, due to the establishment of a valid link or the PHY auto-negotiation moving past the ability detect state, the ENERGYON bit will be set and the INT7 bit of the Interrupt Source Flags Register will assert. If ENERGYON is set and the energy is removed, the INT7 bit will assert. The ENERGYON bit will clear 256mS after the interrupt. If the PHY is in manual mode, INT7 will be asserted 256mS after the link is broken. If the PHY is auto-negotiating, INT7 will be asserted 256mS after the PHY returns to the ability detect state (maximum of 1.5S after the link

is broken). To prevent an unexpected assertion of IRQ, the ENERGYON interrupt mask (INT7_EN) should always be cleared as part of the ENERGYON interrupt service routine.

Note 3-3 The transmitter FIFO depth can be adjusted via the Transmitter FIFO Depth field of the Extended Mode Control/Status Register (19.10:9).

3.6 Resets

The device provides the following chip-level reset sources:

- Hardware Reset (nRESET)
- Software Reset
- Power-Down Reset

3.6.1 HARDWARE RESET (NRESET)

Note: System implementers should connect the nRESET input pin to an output pin from the respective MAC or microcontroller, so that the required power-up sequence can be performed without causing a full system reset event.

A hardware reset will occur when the system reset nRESET input pin is driven low. Anytime nRESET is asserted, it must be held low for the minimum time specified in Section 5.5.4, "Reset Timing," on page 68 to ensure proper reset to the PHY. Following a hardware reset, the device resets the device registers and relatches the configuration straps and CONFIG[3:0] pins.

On first power-up of the device, the sequence below must be also be followed to ensure the device exits reset in the correct operational state:

1. Perform a hardware reset on power-up as per Section 5.5.3, "Power-On Hardware Reset Timing," on page 67.
2. Wait a minimum of 250mS
3. Write SMI Register 0 (Basic Control Register) = 0x4040
4. Wait a minimum of 1 second
5. Assert the nRESET input pin (nRESET = 0)
6. Wait a minimum of 50mS
7. Deassert the nRESET input pin (nRESET = 1)

After completing this sequence, the LAN8820/LAN8820i will be in the default states and ready for any initialization or configuration and allow operation.

Note: A hardware reset (nRESET assertion) is required following power-up. Refer to Section 5.5.3, "Power-On Hardware Reset Timing," on page 67 for additional information.

3.6.2 SOFTWARE RESET

A software reset is initiated by writing a ‘1’ to the PHY Soft Reset (RESET) bit of the Basic Control Register. This self-clearing bit will return to ‘0’ after approximately 256µs, at which time the PHY reset is complete. This reset initializes the logic within the PHY, with the exception of register bits marked as “NASR” (Not Affected by Software Reset).

Following a software reset, the device configuration is reloaded from the register bit values, and not from the configuration straps and CONFIG[3:0] pins. The device does not relatch the hardware configuration settings. For example, if the device is powered up and a configuration strap is changed from its initial power up state, a software reset will not load the new strap setting.

© 2009-2016 Microchip Technology Inc.

3.6.3 POWER-DOWN RESET

A power-down reset is automatically activated when the device comes out of the power-down mode. During power-down, the registers are not reset. Configuration straps and CONFIG[3:0] pins are not latched as a result of a power-down reset. The power-down reset is internally extended by 256 µs after exiting the power-down mode to allow the PLLs to stabilize before the logic is released from reset. Refer to Section 3.7, "Power-Down modes," on page 23 for details on the various power-down modes.

3.7 Power-Down modes

The device supports 3 power-down modes:

- General Power-Down
- Energy Detect Power-Down
- Hardware Power-Down

3.7.1 GENERAL POWER-DOWN

This power-down mode is controlled by the Power Down bit of the Basic Control Register. In this mode, the entire device is powered-down except for the serial management interface. The device remains in the general power-down mode while Power Down is set. When Power Down is cleared, the device powers up and is automatically reset (via a Power-Down Reset). For maximum power savings, auto-negotiation should be disabled before enabling the general power-down mode.

3.7.2 ENERGY DETECT POWER-DOWN

This power-down mode is controlled by the EDPWRDOWN bit of the 10/100 Mode Control/Status Register. In this mode, when no energy is present on the line, nothing is transmitted and the device is powered-down except for the management interface, the SQUELCH circuit and the ENERGYON logic.

The ENERGYON bit in the 10/100 Mode Control/Status Register is asserted when there is valid energy from the line (100BASE-TX, 10BASE-T, or Auto-Negotiation signals) and the PHY powers-up. It automatically resets itself into the previous state prior to power-down, and stays in active mode as long as energy exists on the line. If the ENGERGYON interrupt is enabled (INT7_EN of the Interrupt Mask Register), IRQ is asserted.

Note:	The first and possibly second packet to activate ENERGYON may be lost.

3.7.3 HARDWARE POWER-DOWN

This power-down mode is controlled by the HPD pin. In this mode, the entire device is powered-down except for the serial management interface. The HPD_MODE configuration strap selects whether the PLL will be shut down when in hardware power-down mode. To exit the hardware power-down mode, the HPD pin must be deasserted, followed by the deassertion of the Power Down bit in the Basic Control Register. If the hardware power-down mode is set to shut down the PLL, a software reset must also be issued.

Note 1: The device will wake-up in the hardware power-down mode if the HPD pin is asserted during hardware reset.

2: For additional information on the HPD_MODE configuration strap, refer to Section 3.8.1.1, "Configuration Straps," on page 24.

3.8 Configuration

The device mode of operation may be controlled by hardware and software (register-selectable) configuration options. The initial configuration may be selected in hardware as described in Section 3.8.1. In addition, register-selectable software configuration options may be used to further define the functionality of the transceiver as described in Section 3.8.2. The device supports both IEEE 802.3-2005 compliant and vendor-specific register functions.

3.8.1 HARDWARE CONFIGURATION

Hardware configuration is controlled via multiple configuration straps and the CONFIG[3:0] configuration pins. These items are detailed in the following sub-sections.

3.8.1.1 Configuration Straps

Configuration straps are multi-function pins that are driven as outputs during normal operation. During a Hardware Reset (nRESET), these outputs are tri-stated. The high or low state of the signal is latched following de-assertion of the reset and is used to determine the default configuration of a particular feature. Table 3-4 details the configuration straps. Configuration straps are also listed as part of Section 2.0, "Pin Description and Configuration," on page 5 with underlined names.

Configuration straps include internal resistors in order to prevent the signal from floating when unconnected. If a particular configuration strap is connected to a load, an external pull-up or pull-down should be used to augment the internal resistor to ensure that it reaches the required voltage level prior to latching. The internal resistor can also be overridden by the addition of an external resistor.

Note 1: The system designer must guarantee that configuration straps meet the timing requirements specified in Section 5.5.3, "Power-On Hardware Reset Timing," on page 67. If configuration straps are not at the correct voltage level prior to being latched, the device may capture incorrect strap values.

2: Configuration straps must never be driven as inputs. If required, configuration straps can be augmented, or overridden with external resistors.

TABLE 3-4: CONFIGURATION STRAPS

Configuration Strap	Description	Logic 0 (PD)	Logic 1 (PU)
HPD_MODE	Selects the hardware power-down (HPD) mode	HPD with PLL disabled (Default)	HPD with PLL enabled
RGMII_ID_MODE	Configures the RGMII PHY TXC/RXC delay enable bits of the Control / Status Indications Register (27.[9:8]). Refer to Section 3.3, "RGMII Interface," on page 18 for additional information.	27.[9:8] = 00b (Default)	27.[9:8] = 11b

3.8.1.2 CONFIG[3:0] Configuration Pins

The device provides 4 dedicated configuration pins, CONFIG[3:0], which are used to select the default SMI address and mode of operation. The CONFIG[3:0] configuration pins differ from configuration straps in that they are single-purpose pins and have different latch timing requirements. The high or low states of the CONFIG[3:0] pins are latched following deassertion of a Hardware Reset (nRESET). Refer to Section 5.5.3, "Power-On Hardware Reset Timing," on page 67 for additional CONFIG[3:0] timing information.

Each CONFIG[3:0] configuration pin can be connected in one of four ways. The Configuration Pin Value (CPV) represented by each connection option is shown in Table 3-5.

TABLE 3-5: HARDWARE CONNECTION DETERMINES CONFIGURATION PIN VALUE (CPV)

CONFIG[X] Connects to:	Value
GND	CPV(0)
100_LED	CPV(1)
1000_LED	CPV(2)
VDD	CPV(3)

Using the CPV nomenclature for each CONFIG[3:0] pin, Section 3.8.1.2.1 describes how to configure the SMI address and Section 3.8.1.2.2 describes how to configure the initial mode of operation.

© 2009-2016 Microchip Technology Inc.

Note: The HPD pin is also a dedicated configuration pin. HPD forces the entire device to power down except for the management interface. The Hardware Power-Down mode is described in Section 3.7.3, "Hardware Power-Down," on page 23.

3.8.1.2.1 Configuring the SMI Address (CONFIG[1:0])

The SMI address may be configured via hardware to any value between 0 and 7. If an address greater than 7 is required, the user can configure the PHY address using Software Configuration via the PHYADD[4:0] field of the 10/100 Special Modes Register (after SMI communication at an address is established).

The CONFIG1 pin is used to configure both the SMI address and the value of the Pause Operation (PAUSE) bit in the Auto Negotiation Advertisement Register. The user must first determine the desired PAUSE value. The configuration pin values for CONFIG1 and CONFIG0 should then be selected using Table 3-6 (PAUSE=0) or Table 3-7 (PAUSE=1), respectively.

TABLE 3-6: SMI ADDRESS CONFIGURATION WITH PAUSE=0

PHYADD[2:0]	CONFIG1	CONFIG0
000	CPV(0)	CPV(0)
001	CPV(0)	CPV(1)
010	CPV(0)	CPV(2)
011	CPV(0)	CPV(3)
100	CPV(1)	CPV(0)
101	CPV(1)	CPV(1)
110	CPV(1)	CPV(2)
111	CPV(1)	CPV(3)

TABLE 3-7: SMI ADDRESS CONFIGURATION WITH PAUSE=1

PHYADD[2:0]	CONFIG1	CONFIG0
000	CPV(2)	CPV(0)
001	CPV(2)	CPV(1)
010	CPV(2)	CPV(2)
011	CPV(2)	CPV(3)
100	CPV(3)	CPV(0)
101	CPV(3)	CPV(1)
110	CPV(3)	CPV(2)
111	CPV(3)	CPV(3)

© 2009-2016 Microchip Technology Inc.

3.8.1.2.2 Configuring the Mode of Operation (CONFIG[3:2])

This section describes the initial modes of operation that are available using the CONFIG[3:2] configuration pins. The user may configure additional modes using Software Configuration when the CONFIG[3:2] options do not include the desired mode.

The CONFIG3 pin is used to configure the values of the MOD field (19.15:11) The configuration pin values for CONFIG3 and CONFIG2 should be selected using Table 3-8. These tables also detail how the MOD field of the Extended Mode Control/Status Register will be configured.

Section 3.8.1.2.3 describes how the MOD field controls other configuration bits in the device. When a soft reset is issued via the PHY Soft Reset (RESET) bit of the Basic Control Register, configuration is controlled by the register bit values and the CONFIG[3:0] pins have no affect. Likewise, changing the MOD field of the Extended Mode Control/Status Register bits does not change the configuration of the device in this case.

Note: Table 3-8 utilizes register index and bit number referencing in lieu of individual names.

TABLE 3-8: CONFIGURING THE MODE OF OPERATION

Mode Definitions	CONFIG3	CONFIG2	Reg 19 [15:11]
All mode capable (10/100/1000). Auto-negotiation enabled. Auto master/slave resolution single port.	CPV(2)	CPV(0)	10111
All mode capable (10/100/1000). Auto-negotiation enabled. Auto master/slave resolution multi-port.	CPV(2)	CPV(1)	11000
All mode capable (10/100/1000). Auto-negotiation enabled. Manual master/slave resolution slave port.	CPV(2)	CPV(2)	11001
All mode capable (10/100/1000). Auto-negotiation enabled. Manual master/slave resolution master port.	CPV(2)	CPV(3)	11010

3.8.1.2.3 Configuration Bits Impacted by the Mode of Operation

Immediately after a reset, the MOD field of the Extended Mode Control/Status Register will be set dependent on the configuration pin values of the CONFIG3 and CONFIG2 pins, as described in Section 3.8.1.2.2. Table 3-9 details how the MOD field effects other device configuration register bits.

Note: Table 3-9 utilizes register index and bit number referencing in lieu of individual names

© 2009-2016 Microchip Technology Inc.

TABLE 3-9: REGISTER BITS IMPACTED BY THE MODE OF OPERATION (MOD)

Reg 19 [15:11]	Mode Definitions	Reg 0 [13,12,8,6]	Reg 4 [8,7,6,5]	Reg 9 [12,11,10,9,8]
00000 - 10110	**RESERVED**	-	-	-
10111	All capable. Auto-negotiation enabled. Auto master/slave resolution single port.	01X1	1111	00011
11000	All capable. Auto-negotiation enabled. Auto master/slave resolution multi-port.	01X1	1111	01111
11001	All capable. Auto-negotiation enabled. Manual master/slave resolution slave port.	01X1	1111	10011
11010	All capable. Auto-negotiation enabled. Manual master/slave resolution master port.	01X1	1111	11111
11011 - 11111	**RESERVED**	-	-	-

3.8.2 SOFTWARE CONFIGURATION

The Serial Management Interface (SMI) allows for the configuration and control of multiple transceivers. Several 16-bit status and control registers are accessible through the management interface pins MDC and MDIO for 10/100/1000 Mbps operation. The device implements all the required MII registers and optional registers as described in Section 4.0, "Register Descriptions". Configuring the SMI address is described in Section 3.8.1.2.1. Refer to Section 3.4, "Serial Management Interface (SMI)," on page 20 for additional information on the SMI.

3.9 Miscellaneous Functions

3.9.1 LEDS

The device provides the following LED signals to enable visual indication of status:

- 1000_LED
- 100_LED
- 10_LED

The Speed LEDs (1000_LED, 100_LED, 10_LED) are driven after a link is established. The functional operation of each LED is detailed in TABLE 3-10:.

TABLE 3-10: LED OPERATION

LED	STATUS	DESCRIPTION
1000_LED	On	1000BASE-T link
	Blinking	Transmit/receive activity
100_LED	On	100BASE-T link
	Blinking	Transmit/receive activity
10_LED	On	10BASE-T link
	Blinking	Transmit/receive activity

3.9.2 ISOLATE MODE

The device data paths may be electrically isolated from the RGMII interface by setting the Isolate bit of the Basic Control Register to “1”. In isolation mode, the transceiver does not respond to the TXD and TXCTRL inputs, but does respond to management transactions.

Isolation provides a means for multiple transceivers to be connected to the same RGMII interface without contention. By default, the transceiver is not isolated (on power-up, Isolate=0).

3.9.3 CARRIER SENSE

The carrier sense signal is output on RXCTRL. Carrier sense operation is defined in the IEEE 802.3u standard. The PHY asserts carrier sense based only on receive activity whenever the PHY is either in repeater mode or full-duplex mode. Otherwise, the PHY asserts carrier sense based on either transmit or receive activity.

The carrier sense logic uses the encoded, unscrambled data to determine carrier activity status. It activates carrier sense with the detection of 2 non-contiguous zeros within any 10 bit span. Carrier sense terminates if a span of 10 consecutive ones is detected before a /J/K/ Start-of Stream Delimiter pair. If an SSD pair is detected, carrier sense is asserted until either /T/R/ End–of-Stream Delimiter pair or a pair of IDLE symbols is detected. Carrier is negated after the /T/ symbol or the first IDLE. If /T/ is not followed by /R/, then carrier is maintained. Carrier is treated similarly for IDLE followed by some non-IDLE symbol.

3.9.4 LINK INTEGRITY

This section details the establishment, maintenance and removal of links between the device and a link partner in 1000BASE-T, 100BASE-TX and 10BASE-T modes. Link status is reported in the Link Status bit of the Basic Status Register. The link status is also used to drive the device LEDs as described in Section 3.9.1, "LEDs," on page 27.

3.9.4.1 Establishing and Maintaining a Link

Once a link state is determined via auto-negotiation, parallel detection, or forced operation, the device and the link partner establish a link.

The completion of the auto-negotiation process is reported via the Auto-Negotiate Complete bit of the Basic Status Register and issues an interrupt as described in Section 3.5, "Interrupt Management," on page 21. The speed of the link is reported in the Speed Indication field of the PHY Special Control / Status Register. The speed is also reported on the LED pins for any link.

Failure to complete the auto-negotiation process is reported through the following status bits:

- Parallel Detection Fault reported in the Auto Negotiation Expansion Register while operating in 10BASE-T or 100BASE-TX modes.
- Master/Slave Configuration Fault reported in the Master/Slave Status Register while operating in 1000BASE-T mode.

A fault occurs if the Master/Slave configuration conditions do not allow master/slave resolution, as defined in the Master/Slave Manual Config Enable and Master/Slave Manual Config Value bits in the Master/Slave Control Register of the local and remote link partners.

3.9.4.2 1000BASE-T

For 1000BASE-T links, the device and its link partner enter a training phase after completion of the auto-negotiation process. The links exchange idle symbols and use the information obtained from receiving this signal to set their adaptive filter coefficients.

These coefficients are used in the receiver to equalize the incoming signal, as well as eliminate signal impairments such as echo and cross-talk. Each side indicates completion of the training phase to its link partner by changing the encoding of the idle-symbols it transmits.

The link is established after both sides indicate completion of the training phase. Each side continues to send idle symbols whenever it has no data to transmit. The link is maintained as long as valid idle, data, or carrier extension symbols are received.

Status of both local and remote receivers is reported in the Local Receiver Status and Remote Receiver Status bits of the Master/Slave Status Register.

© 2009-2016 Microchip Technology Inc.

The device also provides an advanced Auto Link Breaker feature (only for 1000BASE-T links). Using this feature, the link can be taken down if the bit error rate (BER) exceeds the threshold defined in Link Break Threshold field of the Link Control Register. The error counting occurs during the idle time for a period commensurate with the specified BER. The Auto Link Breaker feature is enabled via the Link Break Enable bit of the Link Control Register.

3.9.4.3 100BASE-TX

For 100BASE-TX links, the device and its link partner begin transmitting idle symbols after completion of the auto-negotiation process. Each side continues sending idle symbols whenever it has no data to transmit. The link is maintained as long as valid idle symbols or data are received.

3.9.4.4 10BASE-T

For 10BASE-T links, the device and its link partner begin exchanging normal link pulses (NLPs) after completion of the auto-negotiation process. The device transmits an NLP every 16ms and expects to receive an NLP every 8 to 24ms. A link is maintained as long as NLPs are received.

3.9.4.5 Taking Down a Link

The device takes down an established link when the required conditions are no longer met. When a link is down, data transmission stops. For 10BASE-T links, the link is taken down after NLPs are no longer received. For 100BASE-TX and 1000BASE-T links, the link is taken down after valid idle codes are no longer received.

After a link is down, the device does the following:

- If auto-negotiation is enabled, the device re-enters the auto-negotiation phase and begins transmitting FLPs
- If auto-negotiation is not enabled, the device transmits NLPs in 10BASE-T mode, and MLT-3s in 100BASE-TX mode.

3.9.5 SPEED OPTIMIZER

The Speed Optimize function is designed to resolve the issue of using auto-negotiation to establish a link on impaired cable plants.

Examples of impaired cable plants for 1000BASE-T (Gigabit) connections include:

- Channel 2 twisted pair cable plant is broken
- Channel 3 twisted pair cable plant is broken
- Channel 2 and 3 twisted pair cable plants are broken
- Cable plant is too long

Examples of impaired cable plants for 100BASE-TX connections include:

- Cable plant is too long
- Using wrong cable plant (such as CAT-3)

The Speed Optimize function requires the MAC to support 1000/100/10 Mbps speeds, 1000/100 Mbps speeds, 1000/10 Mbps or 100/10 Mbps speeds.

If a link fails to establish after the link partners go through auto-negotiation several times at the HCD (Highest Common Denominator), the device advertises the next highest-allowable speed (as set in the Auto Negotiation Advertisement Register) and restarts auto-negotiation with the new speed.

When 1000BASE-T is advertised, the Speed Optimize function can change its advertised speed from 1000BASE-T to 100BASE-TX and from 100BASE-TX to 10BASE-T. When 100BASE-TX is advertised, the Speed Optimize function can change its advertised speed from 100BASE-TX to 10BASE-T. If a previous link has used the Speed Optimize function to establish a link, when the link goes down, the device begins advertising with all capable speeds.

The Speed Optimize function resets itself to advertise HCD/all speed capabilities after any of the following occurrences:

- Hardware reset
- Software reset
- While link partners exchange link pulses through the Speed Optimize process, the device does not receive link pulses for a period of few seconds
- After an established link goes down

The Speed Optimize function is enabled via Speed Optimize Enable bit in the 10/100 Mode Control/Status Register. When a link (with a speed slower than HCD) is being established through the Speed Optimize process, it is reported via the Speed Optimize Status bit in the User Status 2 Register.

© 2009-2016 Microchip Technology Inc.

3.9.6 LOOPBACK OPERATION

The local loopback mode is enabled by setting the Loopback bit of the Basic Control Register. In this mode, the scrambled transmit data (output of the scrambler) is looped into the receive logic (input of the descrambler). This mode is useful as a board diagnostic and serves as a quick functional verification of the device.

Note:	During transmission in local loopback mode, nothing is transmitted to the line and the transmitters are powered down.

3.9.7 IEEE 1149.1 (JTAG) BOUNDARY SCAN

The device includes an integrated JTAG boundary-scan test port for board-level testing. The interface consists of four pins (TDO, TDI, TCK and TMS) and includes a state machine, data register array, and an instruction register. The JTAG pins are described in Table 2-5, "JTAG Pins". The JTAG interface conforms to the IEEE Standard 1149.1 - *1990 Standard Test Access Port (TAP) and Boundary-Scan Architecture*.

All input and output data is synchronous to the TCK test clock input. TAP input signals TMS and TDI are clocked into the test logic on the rising edge of TCK, while the output signal TDO is clocked on the falling edge.

The JTAG logic is reset via a hardware reset or when the TMS and TDI pins are high for five TCK periods.

The implemented IEEE 1149.1 instructions and their op codes are shown in Table 3-11.

TABLE 3-11: IEEE 1149.1 OP CODES

INSTRUCTION	OP CODE	COMMENT
Bypass	111	Mandatory Instruction
Sample/Preload	010	Mandatory Instruction
EXTEST	000	Mandatory Instruction
Clamp	011	Optional Instruction
HIGHZ	100	Optional Instruction
IDCODE	001	Optional Instruction

Note:	All digital I/O pins support IEEE 1149.1 operation. Analog pins and the XO pin do not support IEEE 1149.1 operation.

3.9.8 ADVANCED FEATURES

The device implements several advanced features to enhance manageability of the Ethernet link. These features are detailed in the following sub-sections.

3.9.8.1 Crossover Indicators

The device reports crossed channels in the XOVER Resolution 0:1 and XOVER Resolution 2:3 fields of the User Status 2 Register. This feature is useful for trouble-shooting problems during network installation.

3.9.8.2 Polarity Inversion Indicators

The device automatically detects and corrects inverted signal polarity. This is reported in the polarity inversion bits (POLARITY_INV_3, POLARITY_INV_2, POLARITY_INV_1 and POLARITY_INV_0) of the User Status 1 Register.

The polarity inversion bit for Channel 1 (POLARITY_INV_1) is valid after auto-negotiation is complete as indicated by the Auto-Negotiate Complete bit of the Basic Status Register. The polarity inversion bits for Channels 0, 2 and 3 (POLARITY_INV_0, POLARITY_INV_2, POLARITY_INV_3) are valid only after the link is up as indicated by the Link Status bit of the Basic Status Register.

© 2009-2016 Microchip Technology Inc.

3.9.8.3 Receive Error-Free Packets Counter

The quality of a link can be monitored by using the Receive Error-Free Packets Counter. The device counts the number of good packets received and reports a 48-bit value across 3 advanced registers: Receive Error-Free Packets Counter Low Register, Receive Error-Free Packets Counter Mid Register, and Receive Error-Free Packets Counter High Register. The Receive Error-Free Packets Counter Low Register latches the two other related counter registers and must always be read first. The Receive Error-Free Packets Counter High Register register must be read last, and will automatically clear the counter.

3.9.8.4 CRC Error Counter

This 48-bit counter counts the number of CRC errors detected. It's value can be read across 3 advanced registers: CRC Error Counter Low Register, CRC Error Counter Mid Register, and CRC Error Counter High Register. The CRC Error Counter Low Register latches the two other related counter registers and must always be read first. The CRC Error Counter High Register must be read last, and will automatically clear the counter.

3.9.8.5 Receive Error During Data Counter

This 16-bit counter counts the number of errors that occurred while data was being received. The value is read from the Receive Error During Data Counter Register.

3.9.8.6 Receive Error During Idle Counter

This 16-bit counter counts the number of errors that occurred during idle. The value is read from the Receive Error During Idle Counter Register register.

3.9.8.7 Transmitted Packets Counter

This 48-bit counter counts the number of packets that were transmitted. It's value can be read across 3 advanced registers: Transmit Packet Counter Low Register, Transmit Packet Counter Mid Register, and Transmit Packet Counter High Register. The Transmit Packet Counter Low Register latches the two other related counter registers and must always be read first. The Transmit Packet Counter High Register must be read last, and it will automatically clear the counter.

3.10 Application Diagrams

This section provides typical application diagrams for the following:

- Simplified Application Diagram
- Power Supply & Twisted Pair Interface Diagram

3.10.1 SIMPLIFIED APPLICATION DIAGRAM

FIGURE 3-6: SIMPLIFIED APPLICATION DIAGRAM

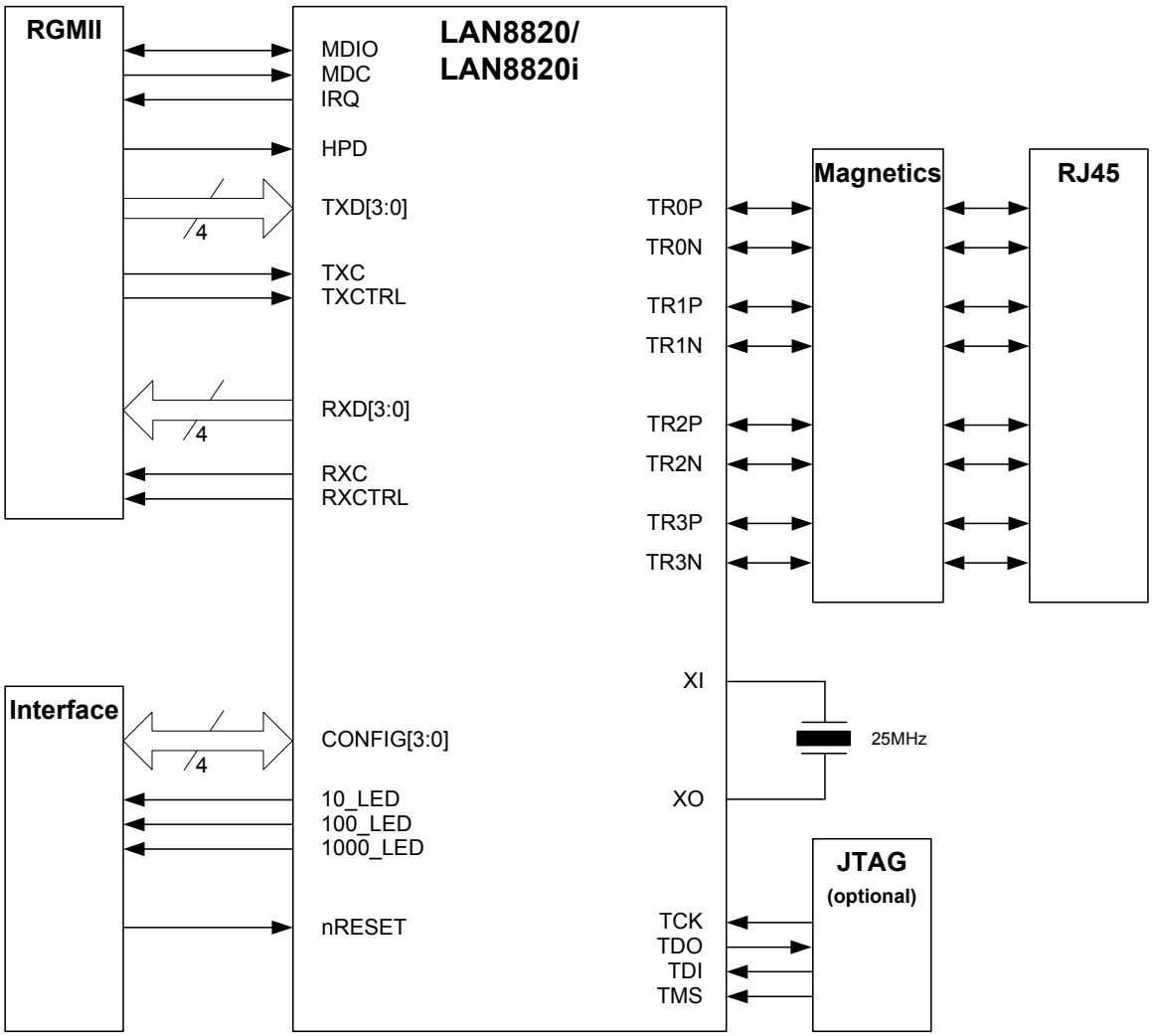

© 2009-2016 Microchip Technology Inc.

3.10.2 POWER SUPPLY & TWISTED PAIR INTERFACE DIAGRAM

FIGURE 3-7: POWER SUPPLY & TWISTED PAIR INTERFACE DIAGRAM

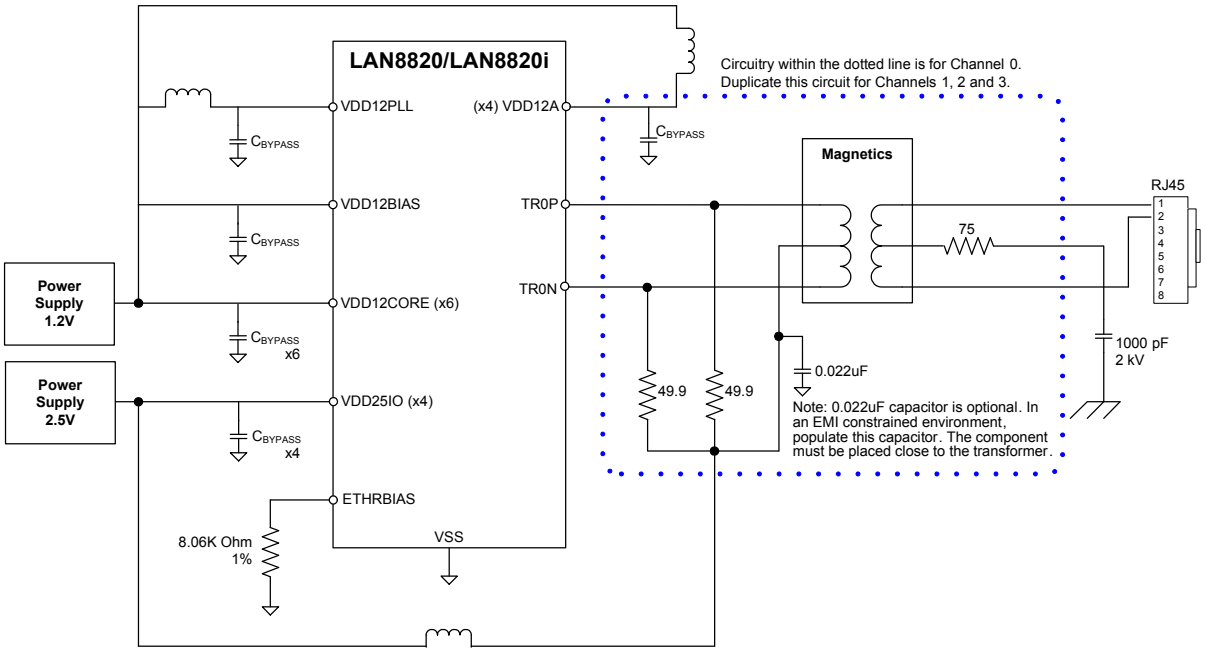

4.0 REGISTER DESCRIPTIONS

This chapter describes the various control and status registers (CSRs). All registers follow the IEEE 802.3 (clause 22.2.4) management register set. All functionality and bit definitions comply with these standards. The IEEE 802.3 specified register index (in decimal) is included with each register definition, allowing for addressing of these registers via the Serial Management Interface (SMI) protocol.

The device registers are categorized into following groups:

- Primary PHY Registers
- Advanced PHY Registers

4.1 Register Nomenclature

Table 4-1 describes the register bit attributes used throughout this document.

TABLE 4-1: REGISTER BIT TYPES

Register Bit Type Notation	Register Bit Description
R	**Read:** A register or bit with this attribute can be read.
W	**Write:** A register or bit with this attribute can be written.
RO	**Read only:** Read only. Writes have no effect.
WO	**Write only:** If a register or bit is write-only, reads will return unspecified data.
WC	**Write One to Clear:** writing a one clears the value. Writing a zero has no effect.
WAC	**Write Anything to Clear:** writing anything clears the value.
RC	**Read to Clear:** Contents is cleared after the read. Writes have no effect.
LL	**Latch Low:** Clear on read of register.
LH	**Latch High:** Clear on read of register.
SC	**Self-Clearing:** Contents is self-cleared after the being set. Writes of zero have no effect. Contents can be read.
RO/LH	**Read Only, Latch High:** This mode is used by the Ethernet PHY registers. Bits with this attribute will stay high until the bit is read. After it a read, the bit will remain high, but will change to low if the condition that caused the bit to go high is removed. If the bit has not been read the bit will remain high regardless of if its cause has been removed.
NASR	**Not Affected by Software Reset:** The state of NASR bits does not change on assertion of a software reset.
X	Either a 1 or 0.
RESERVED	**Reserved Field:** Reserved fields must be written with zeros, unless otherwise indicated, to ensure future compatibility. The value of reserved bits is not guaranteed on a read.

Many of these register bit notations can be combined. Some examples of this are shown below:

- **R/W:** Can be written. Will return current setting on a read.
- **R/WAC:** Will return current setting on a read. Writing anything clears the bit.

© 2009-2016 Microchip Technology Inc.

4.2 Primary PHY Registers

The primary PHY registers are accessed via the SMI bus. An index is used to access individual primary registers. Primary PHY register indexes are shown in Table 4-2, "PHY Control and Status Registers". Additional read-only advanced registers are indirectly accessible via the Advanced Register Address Port and Advanced Register Read Data Port. Section 4.3, "Advanced PHY Registers," on page 53 provides detailed information regarding the advanced registers.

Note 1: All unlisted register index values are not supported and should not be addressed.

2: The NASR (Not Affected by Software Reset) designation is only applicable when the PHY Soft Reset (RESET) bit of the Basic Control Register is set.

TABLE 4-2: PHY CONTROL AND STATUS REGISTERS

Index (In Decimal)	Register Name
0	Basic Control Register
1	Basic Status Register
2	PHY Identifier 1 Register
3	PHY Identifier 2 Register
4	Auto Negotiation Advertisement Register
5	Auto Negotiation Link Partner Ability Register
6	Auto Negotiation Expansion Register
7	Auto Negotiation Next Page TX Register
8	Auto Negotiation Next Page RX Register
9	Master/Slave Control Register
10	Master/Slave Status Register
15	Extended Status Register
16	Link Control Register
17	10/100 Mode Control/Status Register
18	10/100 Special Modes Register
19	Extended Mode Control/Status Register
20	Advanced Register Address Port
21	Advanced Register Read Data Port
27	Control / Status Indications Register
29	Interrupt Source Flags Register
30	Interrupt Mask Register
31	PHY Special Control / Status Register

4.2.1 BASIC CONTROL REGISTER

Index (In Decimal): 0 Size: 16 bits

Bits	Description	Type	Default
15	**PHY Soft Reset (RESET)** 1 = PHY software reset. This bit is self-clearing. When setting this bit, do not set other bits in this register. The configuration is set from the register bit values as described in Section 3.6.2, "Software Reset," on page 22. **Note:** The PHY will be in the normal mode after a PHY software reset.	R/W SC	0b
14	**Loopback** 0 = normal operation 1 = loopback mode	R/W	0b
13	**Speed Select[0]** Together with Speed Select[1], sets speed per the following table: [Speed Select1][Speed Select 0] 00 = 10Mbps 01 = 100Mbps 10 = 1000Mbps 11 = Reserved **Note:** Ignored if the Auto-Negotiation Enable bit of this register is 1.	R/W	Note 4-1
12	**Auto-Negotiation Enable** 0 = disable auto-negotiate process 1 = enable auto-negotiate process (overrides the Speed Select[0], Speed Select[1], and Duplex Mode bits of this register)	R/W	Note 4-1
11	**Power Down** 0 = normal operation 1 = General power down mode **Note:** Auto-Negotiation Enable must be cleared before setting this bit.	R/W	0b
10	**Isolate** 0 = normal operation 1 = electrical isolation of PHY from RGMII	R/W	0b
9	**Restart Auto-Negotiate** 0 = normal operation 1 = restart auto-negotiate process **Note:** Bit is self-clearing.	R/W SC	0b
8	**Duplex Mode** 0 = half duplex 1 = full duplex **Note:** Ignored if the Auto-Negotiation Enable bit of this register is 1.	R/W	Note 4-1
7	**RESERVED**	RO	-
6	**Speed Select[1]** See description for Speed Select[0] for details.	RO	Note 4-1
5:0	**RESERVED**	RO	-

Note 4-1 The default is determined by the CONFIG[3:2] pins as described in Section 3.8.1.2.3, "Configuration Bits Impacted by the Mode of Operation," on page 26“

© 2009-2016 Microchip Technology Inc.

4.2.2 BASIC STATUS REGISTER

Index (In Decimal): 1 Size: 16 bits

Bits	Description	Type	Default
15	**100BASE-T4** 0 = no T4 ability 1 = T4 able	RO	0b
14	**100BASE-TX Full Duplex** 0 = no TX full duplex ability 1 = TX with full duplex	RO	1b
13	**100BASE-TX Half Duplex** 0 = no TX half duplex ability 1 = TX with half duplex	RO	1b
12	**10BASE-T Full Duplex** 0 = no 10Mbps with full duplex ability 1 = 10Mbps with full duplex	RO	1b
11	**10BASE-T Half Duplex** 0 = no 10Mbps with half duplex ability 1 = 10Mbps with half duplex	RO	1b
10	**100BASE-T2 Full Duplex** 0 = PHY not able to perform full duplex 100BASE-T2 1 = PHY able to perform full duplex 100BASE-T2	RO	0b
9	**100BASE-T2 Half Duplex** 0 = PHY not able to perform half duplex 100BASE-T2 1 = PHY able to perform half duplex 100BASE-T2	RO	0b
8	**Extended Status** 0 = no extended status information in register 15 1 = extended status information in register 15	RO	1b
7:6	**RESERVED**	RO	-
5	**Auto-Negotiate Complete** 0 = auto-negotiate process not completed 1 = auto-negotiate process completed	RO	0b
4	**Remote Fault** 0 = no remote fault 1 = remote fault condition detected	RO/LH	0b
3	**Auto-Negotiate Ability** 0 = unable to perform auto-negotiation function 1 = able to perform auto-negotiation function	RO	1b
2	**Link Status** 0 = link is down 1 = link is up	RO/LL	0b
1	**Jabber Detect** 0 = no jabber condition detected 1 = jabber condition detected	RO/LH	0b
0	**Extended Capabilities** 0 = does not support extended capabilities registers 1 = supports extended capabilities registers	RO	1b

4.2.3 PHY IDENTIFIER 1 REGISTER

Index (In Decimal): 2 Size: 16 bits

Bits	Description	Type	Default
15:0	**PHY ID Number** Assigned to the 3rd through 18th bits of the Organizationally Unique Identifier (OUI), respectively. OUI=00800Fh	R/W	0007h

4.2.4 PHY IDENTIFIER 2 REGISTER

Index (In Decimal): 3 Size: 16 bits

Bits	Description	Type	Default
15:10	**PHY ID Number** Assigned to the 19th through 24th bits of the OUI.	R/W	C0h
9:4	**Model Number** Six-bit manufacturer's model number.	R/W	0Eh
3:0	**Revision Number** Four-bit manufacturer's revision number.	R/W	Note 4-2

Note 4-2 The default value of this field will vary dependent on the silicon revision number.

4.2.5 AUTO NEGOTIATION ADVERTISEMENT REGISTER

Index (In Decimal): 4 Size: 16 bits

Bits	Description	Type	Default
15	**Next Page** 0 = no next page ability 1 = next page capable **Note:** This device does not support next page ability.	R/W	0b
14	**RESERVED**	RO	-
13	**Remote Fault** 0 = no remote fault 1 = remote fault detected	R/W	0b
12	**RESERVED**	RO	-

© 2009-2016 Microchip Technology Inc.

Bits	Description	Type	Default
11	**Asymmetric Pause** 0 = Asymmetrical pause direction is not supported by MAC 1 = Asymmetrical pause direction is supported by MAC	R/W	0b
10	**Pause Operation (PAUSE)** 0 = Pause operation is not supported by MAC 1 = Pause operation is supported by MAC	R/W	Note 4-3
9	**RESERVED**	RO	-
8	**100BASE-TX Full Duplex** 0 = no TX full duplex ability 1 = TX with full duplex	R/W	Note 4-4
7	**100BASE-TX** 0 = no TX ability 1 = TX able	R/W	Note 4-4
6	**10BASE-T Full Duplex** 0 = no 10Mbps with full duplex ability 1 = 10Mbps with full duplex	R/W	Note 4-4
5	**10BASE-T** 0 = no 10Mbps ability 1 = 10Mbps able	R/W	Note 4-4
4:0	**Selector Field** 00001 = IEEE 802.3	R/W	00001b

Note 4-3 The default is determined by the CONFIG1 pin as described in Section 3.8.1.2.1, "Configuring the SMI Address (CONFIG[1:0])," on page 25

Note 4-4 The default is determined by the CONFIG[3:2] pins as described in Section 3.8.1.2.3, "Configuration Bits Impacted by the Mode of Operation," on page 26.

4.2.6 AUTO NEGOTIATION LINK PARTNER ABILITY REGISTER

Index (In Decimal): 5 Size: 16 bits

Bits	Description	Type	Default
15	**Next Page** 0 = no next page ability 1 = next page capable	RO	0b
14	**Acknowledge** 0 = link code word not yet received 1 = link code word received from partner	RO	0b
13	**Remote Fault** 0 = no remote fault 1 = remote fault detected	RO	0b
12:11	**RESERVED**	RO	-
10	**Pause Operation (PAUSE)** 0 = Pause Operation is not supported by remote MAC 1 = Pause Operation is supported by remote MAC	RO	0b

Bits	Description	Type	Default
9	**100BASE-T4** 0 = no T4 ability 1 = T4 able **Note:** This PHY does not support T4 ability.	RO	0b
8	**100BASE-TX Full Duplex** 0 = no TX full duplex ability 1 = TX with full duplex	RO	0b
7	**100BASE-TX** 0 = no TX ability 1 = TX able	RO	0b
6	**10BASE-T Full Duplex** 0 = no 10Mbps with full duplex ability 1 = 10Mbps with full duplex	RO	0b
5	**10BASE-T** 0 = no 10Mbps ability 1 = 10Mbps able	RO	0b
4:0	**Selector Field** 00001 = IEEE 802.3	RO	00001b

4.2.7 AUTO NEGOTIATION EXPANSION REGISTER

Index (In Decimal): 6 Size: 16 bits

Bits	Description	Type	Default
15:5	**RESERVED**	RO	-
4	**Parallel Detection Fault** 0 = no fault detected by parallel detection logic 1 = fault detected by parallel detection logic	RO/LH	0b
3	**Link Partner Next Page Able** 0 = link partner does not have next page ability 1 = link partner has next page ability	RO	0b
2	**Next Page Able** 0 = local device does not have next page ability 1 = local device has next page ability	RO	0b
1	**Page Received** 0 = new page not yet received 1 = new page received	RO/LH	0b
0	**Link Partner Auto-Negotiation Able** 0 = link partner does not have auto-negotiation ability 1 = link partner has auto-negotiation ability	RO	0b

© 2009-2016 Microchip Technology Inc.

4.2.8 AUTO NEGOTIATION NEXT PAGE TX REGISTER

Index (In Decimal): 7 Size: 16 bits

Bits	Description	Type	Default
15	**Next Page** 0 = no next page ability 1 = next page capable	R/W	0b
14	**RESERVED**	RO	-
13	**Message Page** 0 = unformatted page 1 = message page	R/W	1b
12	**Acknowledge 2** 0 = device cannot comply with message 1 = device will comply with message	R/W	0b
11	**Toggle** 0 = previous value was HIGH 1 = previous value was LOW	RO	0b
10:0	**Message Code** Message/Unformatted Code Field	RW	00 0000 0001b

4.2.9 AUTO NEGOTIATION NEXT PAGE RX REGISTER

Index (In Decimal): 8 Size: 16 bits

Bits	Description	Type	Default
15	**Next Page** 0 = no next page ability 1 = next page capable	RO	0b
14	**Acknowledge** 0 = Link code word not yet received from partner 1 = Link code word received from partner	RO	0b
13	**Message Page** 0 = unformatted page 1 = message page	RO	1b
12	**Acknowledge 2** 0 = device cannot comply with message 1 = device will comply with message	RO	0b
11	**Toggle** 0 = previous value was HIGH 1 = previous value was LOW	RO	0b
10:0	**Message Code** Message/Unformatted Code Field	RO	000 0000 0000b

4.2.10 MASTER/SLAVE CONTROL REGISTER

Index (In Decimal): 9 Size: 16 bits

Bits	Description	Type	Default
15:13	**Test Mode** 000 = Normal mode 001 = Test Mode 1 - Transmit waveform test 010 = Test Mode 2 - Transmit jitter test in Master mode 011 = Test Mode 3 - Transmit jitter test in Slave mode 100 = Test Mode 4 - Transmitter distortion test 101 = Reserved 110 = Reserved 111 = Reserved **Note:** Setting these bits may prevent correct link partner connection if both the device PHY and link partner PHY are set as masters.	R/W	000b
12	**Master/Slave Manual Config Enable** 0 = disable MASTER-SLAVE manual configuration value 1 = enable MASTER-SLAVE manual configuration value	R/W	Note 4-5
11	**Master/Slave Manual Config Value** Active only when the Master/Slave Manual Config Enable bit of this register is 1. 0 = Slave 1 = Master	R/W	Note 4-5
10	**Port Type** Active only when the Master/Slave Manual Config Enable bit of this register is 0. 0 = Single port device 1 = Multiport device	R/W	Note 4-5
9	**1000BASE-T Full Duplex** 0 = advertise PHY is not 1000BASE-T full duplex capable 1 = advertise PHY is 1000BASE-T full duplex capable	R/W	Note 4-5
8	**1000BASE-T Half Duplex** 0 = advertise PHY is not 1000BASE-T half duplex capable 1 = advertise PHY is 1000BASE-T half duplex capable	R/W	Note 4-5
7:0	**RESERVED**	RO	-

Note 4-5 The default is determined by the CONFIG[3:2] pins as described in Section 3.8.1.2.3, "Configuration Bits Impacted by the Mode of Operation," on page 26.

© 2009-2016 Microchip Technology Inc.

4.2.11 MASTER/SLAVE STATUS REGISTER

Index (In Decimal): 10 Size: 16 bits

Bits	Description	Type	Default
15	**Master/Slave Configuration Fault** 0 = No MASTER-SLAVE configuration fault detected 1 = MASTER-SLAVE configuration fault detected	RO/LH	0b
14	**Master/Slave Configuration Resolution** 0 = Local PHY configuration resolved to SLAVE 1 = Local PHY configuration resolved to MASTER	RO	0b
13	**Local Receiver Status** 0 = Local Receiver not OK 1 = Local Receiver OK	RO	0b
12	**Remote Receiver Status** 0 = Remote Receiver not OK 1 = Remote Receiver OK	RO	0b
11	**LP 1000T FD** This bit is valid only when the Page Received bit of the Auto Negotiation Expansion Register is 1. 0 = Link Partner is not capable of 1000BASE-T full duplex 1 = Link Partner is capable of 1000BASE-T full duplex	RO	0b
10	**LP 1000T HD** This bit is valid only when the Page Received bit of the Auto Negotiation Expansion Register is 1. 0 = Link Partner is not capable of 1000BASE-T half duplex 1 = Link Partner is capable of 1000BASE-T half duplex	RO	0b
9:8	**RESERVED**	RO	-
7:0	**Idle Error Count** Cumulative count of the errors detected when the receiver is receiving idles. These bits are reset to all zeros when the error count is read by the management function or upon execution of a hardware reset, software reset, or logical reset. This field is held at all ones in case of over-flow. This field can be used to trigger an interrupt upon overflow. Refer to Section 3.5, "Interrupt Management," on page 21 for additional information.	RO	00h

4.2.12 EXTENDED STATUS REGISTER

Index (In Decimal): 15 Size: 16 bits

Bits	Description	Type	Default
15	**1000BASE-X Full Duplex** 0 = PHY not able to perform full duplex 1000BASE-X 1 = PHY able to perform full duplex 1000BASE-X	RO	0b
14	**1000BASE-X Half Duplex** 0 = PHY not able to perform half duplex 1000BASE-X 1 = PHY able to perform half duplex 1000BASE-X	RO	0b
13	**1000BASE-T Full Duplex** 0 = PHY not able to perform full duplex 1000BASE-T 1 = PHY able to perform full duplex 1000BASE-T	RO	1b
12	**1000BASE-T Half Duplex** 0 = PHY not able to perform half duplex 1000BASE-T 1 = PHY able to perform half duplex 1000BASE-T	RO	1b
11:0	**RESERVED**	RO	-

4.2.13 LINK CONTROL REGISTER

Index (In Decimal): 16 Size: 16 bits

Bits	Description	Type	Default
15:10	**RESERVED**	RO	-
9:8	**Speed Optimize Control** This register sets the number of Auto Negotiation attempts before the Speed Optimize mechanism reduces the advertised speed. 00 = 7 attempts 01 = 5 attempts 10 = 4 attempts 11 = 3 attempts **Note:** Refer to Section 3.9.5, "Speed Optimizer," on page 29 for additional information.	R/W	00b
7:6	**RESERVED**	RO	-
5:4	**Link Break Threshold** Idle error threshold for failing the link, if Link break in enabled. 00 = link break threshold is 10E-8. 01 = link break threshold is 10E-9. 10 = link break threshold is 10E-10. 11 = link break threshold is 10E-11	R/W	10b
3	**Link Break Enable** 0 = link break is disabled 1 = link break is enabled	R/W	0b

© 2009-2016 Microchip Technology Inc.

Bits	Description	Type	Default
2	**Power Optimization Disable** 0 = Automatic power optimization is enabled 1 = Automatic power optimization is disabled (power consumption is maximum)	R/W	0b
1	**RESERVED**	RO	-
0	**LRST** Logic reset. This bit generates a reset that put all the logic into a known state, but DOES NOT affect the register sets and 10/100 circuits. This bit is NOT a self-clearing bit. Writing “1” to this bit generates synchronous reset.	RO	-

4.2.14 10/100 MODE CONTROL/STATUS REGISTER

Index (In Decimal): 17 Size: 16 bits

Bits	Description	Type	Default
15	**EDSHORT** Energy Detect Short detection mode 0 = Normal detect mode 1 = Short detect mode	R/W	0b
14	**FASTRIP** 10BASE-T fast mode 0 = normal operation 1 = activates PHYT_10 test mode	R/W	0b
13	**EDPWRDOWN** Enable the Energy Detect Power-Down mode 0 = Energy Detect Power-Down is disabled 1 = Energy Detect Power-Down is enabled	R/W	0b
12	**ED Power Down Mode** Select energy detect power down mode 0 = ED power down mode without NLP transmission 1 = ED power down mode with NLP transmission	R/W	0b
11:8	**RESERVED**	RO	-
7	**Speed Optimize Enable** 0 = Disable Speed Optimize 1 = Enable Speed Optimize **Note:** Refer to Section 3.9.5, "Speed Optimizer," on page 29 for additional information.	R/W	0b
6	**AutoNeg NP Enable** 0 = Next page is disabled in the auto-negotiation process 1 = Next page is enabled in the auto-negotiation process	R/W	1b
5	**Auto MDIX Disable** 0 = Auto Xover is enabled 1 = Auto Xover is disabled selection is done manually	R/W	0b

Bits	Description	Type	Default
4	**Auto Next Page Disable** Setting this bit disables automatic next page exchange in 1000BASE-T. Advertising of next pages then depends on the value of the Next Page bit of the Auto Negotiation Advertisement Register. In this case, if Next Page is cleared, only the base page is sent. 0 = Normal operation 1 = Automatic next page is disabled	R/W	0b
3:2	**RESERVED**	RO	-
1	**ENERGYON** This bit indicates whether energy is detected on the line. It is reset to “1” by a hardware reset. When a software reset is asserted, this bit is cleared. If this bit was set prior to a software reset, it will cause the INT7 bit of the Interrupt Source Flags Register to be set. Therefore, after a software or hardware reset, the INT7 bit should be cleared by writing a “1” to it. Refer to Section 3.5, "Interrupt Management," on page 21 for additional ENERGYON information.	RO	1b
0	**Semi Crossover Enable** Setting this register enables semi cross over. 0 = Disable Semi cross over 1 = Enable Semi cross over **Note:** Refer to Section 3.2, "HP Auto-MDIX," on page 16 for additional information.	R/W	0b

4.2.15 10/100 SPECIAL MODES REGISTER

Index (In Decimal): 18 Size: 16 bits

Bits	Description	Type	Default
15	**Enable RXDV Early Assertion** Setting this bit enables early assertion of RXDV in 10BASE-T. RXDV is asserted before the SFD. 0 = Disable 1 = Enable	R/W	0b
14	**10BT HD Loopback Disable** Setting this bit disables MII loopback in 10BASE-T half duplex mode. 0 = normal operation 1 = activates PHYT_10 test mode	R/W NASR	000000b
13:8	**RESERVED**	RO	-
7	**CRC Error Counter Data Source** Setting this bit changes the data source of the 1000BASE-T CRC error counter. 0 = Data source in 1000BASE-T received data 1 = Data source in 1000BASE-T transmitted data	R/W	0b
6	**MCLK25EN** Enable an 25Mhz MAC clock output. 0 = 125MHz 1 = 25MHz	RO	0b
5	**RESERVED**	RO	-

© 2009-2016 Microchip Technology Inc.

Bits	Description	Type	Default
4:0	**PHYADD[4:0]** The PHY Address is used for the SMI address and for the initialization of the Cipher (Scrambler) key.	R/W NASR	Note 4-6

Note 4-6 The default is determined by the CONFIG[1:0] pins as described in Section 3.8.1.2.1, "Configuring the SMI Address (CONFIG[1:0])," on page 25.

4.2.16 EXTENDED MODE CONTROL/STATUS REGISTER

Index (In Decimal): 19 Size: 16 bits

Bits	Description	Type	Default
15:11	**MOD** Configures mode of operation. Refer to Section 3.8.1.2.2, "Configuring the Mode of Operation (CONFIG[3:2])," on page 26 for details. **Note:** The MOD bits should not be modified and must be preserved when writing to this register.	R/W NASR	Note 4-7
10:9	**Transmitter FIFO Depth** 00 = 4 bytes 01 = 5 bytes 10 = 6 bytes 11 = 7 bytes	R/W	00b
8:3	**RESERVED** **These bits must be written as 011111b.**		
2	**MDI/MDI-X 0:1** Selects between MDI and MDI-X for channel 0 and channel 1 only if the Auto MDIX Disable bit of the 10/100 Mode Control/Status Register is 1. 0 = MDI 1 = MDI-X	RW	0b
1	**MDI/MDI-X 2:3** Selects between MDI and MDI-X for channel 2 and channel 3 only if the Auto MDIX Disable bit of the 10/100 Mode Control/Status Register is 1. 0 = MDI 1 = MDI-X	RW	0b
0	**CONDITIONAL PARALLEL DETECT** 0 = Parallel detect. (Auto Negotiation Advertisement Register is ignored.) 1 = Conditional Parallel Detect only at the speed advertised in the Auto Negotiation Advertisement Register. 10BASE-T half duplex (10BASE-T bit =1) 100BASE-TX half duplex (100BASE-TX bit =1)	RW	0b

Note 4-7 The default mode is determined by the CONFIG[3:2] pins as described in Section 3.8.1.2.2, "Configuring the Mode of Operation (CONFIG[3:2])," on page 26

4.2.17 ADVANCED REGISTER ADDRESS PORT

Index (In Decimal): 20 Size: 16 bits

Bits	Description	Type	Default
15	**Read** When this bit is set to 1, the contents of the advanced register selected by the Register Address field are latched to the Advanced Register Read Data Port. This bit is self-cleared.	SC	0b
14:7	**RESERVED** **Must be written with 00000011b for proper operation.** **The values of RESERVED bits are not guaranteed on a read.**	R/W	-
6:0	**Register Address** The address of the Advanced Register being accessed (0-12).	RO	0000000b

Note: Refer to Section 4.3, "Advanced PHY Registers," on page 53 for additional information on the advanced register set.

4.2.18 ADVANCED REGISTER READ DATA PORT

Index (In Decimal): 21 Size: 16 bits

Bits	Description	Type	Default
15:0	**Read** Data read from the Advanced Register selected via the Advanced Register Address Port.	RO	0000h

Note: Refer to Section 4.3, "Advanced PHY Registers," on page 53 for additional information on the advanced register set.

© 2009-2016 Microchip Technology Inc.

4.2.19 CONTROL / STATUS INDICATIONS REGISTER

Index (In Decimal): 27 Size: 16 bits

Bits	Description	Type	Default
15:10	**RESERVED**	RO	-
9	**RGMII PHY TXC Delay Enable** Configures the RGMII PHY TXC delay mode: 0 = RGMII PHY TXC delay mode disabled 1 = RGMII PHY TXC delay mode enabled	R/W NASR	Note 4-8
8	**RGMII PHY RXC Delay Enable** Configures the RGMII PHY RXC delay mode: 0 = RGMII PHY RXC delay mode disabled 1 = RGMII PHY RXC delay mode enabled	R/W NASR	Note 4-8
7:5	**RESERVED**	RO	-
4	**XPOL** Polarity state of the 10BASE-T: 0 = Normal polarity 1 = Reversed polarity	RO	0b
3:0	**RESERVED**	RO	-

Note 4-8 The default is determined by the RGMII_ID_MODE configuration strap. When RGMII_ID_MODE is latched high, bits 8 and 9 are “1”. When RGMII_ID_MODE is latched low, bits 8 and 9 are “0”. Refer to Section 3.3, "RGMII Interface," on page 18 and Section 3.8.1.1, "Configuration Straps," on page 24 for additional information.

4.2.20 INTERRUPT SOURCE FLAGS REGISTER

Index (In Decimal): 29 Size: 16 bits

Bits	Description	Type	Default
15:11	**RESERVED**	RO	-
10	**INT10** 0 = Not source of interrupt 1 = Transmitter Elastic Buffer Overflow	LH/WC	0b
9	**INT9** 0 = Not source of interrupt 1 = Transmitter Elastic Buffer Underflow	LH/WC	0b
8	**INT8** 0 = Not source of interrupt 1 = Idle Error Count Overflow	LH/WC	0b

Bits	Description	Type	Default
7	**INT7** 0 = Not source of interrupt 1 = ENERGYON generated This bit is set when there is a “0” to “1” transition of the ENERGYON bit in the 10/100 Mode Control/Status Register. This occurs when transitioning from no energy detected to energy detected, or vice versa.	LH/WC	0b
6	**INT6** 0 = Not source of interrupt 1 = Auto-Negotiation complete	LH/WC	0b
5	**INT5** 0 = Not source of interrupt 1 = Remote Fault Detected	LH/WC	0b
4	**INT4** 0 = Not source of interrupt 1 = Link Down (link status negated)	LH/WC	0b
3	**INT3** 0 = Not source of interrupt 1 = Auto-Negotiation LP Acknowledged	LH/WC	0b
2	**INT2** 0 = Not source of interrupt 1 = Parallel Detection Fault or Master/Slave Configuration Fault	LH/WC	0b
1	**INT1** 0 = Not source of interrupt 1 = Auto-Negotiation Page Received	LH/WC	0b
0	**RESERVED**	RO	-

Note: Refer to Section 3.5, "Interrupt Management," on page 21 for additional information.

4.2.21 INTERRUPT MASK REGISTER

Index (In Decimal): 30 Size: 16 bits

Bits	Description	Type	Default
15:11	**RESERVED**	RO	-
10	**INT10_EN** Transmitter Elastic Buffer Overflow interrupt enable. 0 = interrupt source is masked 1 = interrupt source is enabled	R/W	0b
9	**INT9_EN** Transmitter Elastic Buffer Underflow interrupt enable. 0 = interrupt source is masked 1 = interrupt source is enabled	R/W	0b
8	**INT8_EN** Idle Error Count Overflow interrupt enable. 0 = interrupt source is masked 1 = interrupt source is enabled	R/W	0b

© 2009-2016 Microchip Technology Inc.

Bits	Description	Type	Default
7	**INT7_EN** ENERGYON interrupt enable 0 = interrupt source is masked 1 = interrupt source is enabled	R/W	0b
6	**INT6_EN** Auto-Negotiation interrupt enable 0 = interrupt source is masked. 1 = interrupt source is enabled.	R/W	0b
5	**INT5_EN** Remote Fault Detected interrupt enable. 0 = interrupt source is masked. 1 = interrupt source is enabled.	R/W	0b
4	**INT4_EN** Link Down (Link status negated) interrupt enable. 0 = interrupt source is masked. 1 = interrupt source is enabled.	R/W	0b
3	**INT3_EN** Auto-Negotiation LP Acknowledge interrupt enable. 0 = interrupt source is masked. 1 = interrupt source is enabled.	R/W	0b
2	**INT2_EN** Parallel Detection Fault or Master/Slave Configuration Fault interrupt enable. 0 = interrupt source is masked. 1 = interrupt source is enabled.	R/W	0b
1	**INT1_EN** Auto-Negotiation Page Received interrupt enable. 0 = interrupt source is masked. 1 = interrupt source is enabled.	R/W	0b
0	**RESERVED**	RO	-

Note: Refer to Section 3.5, "Interrupt Management," on page 21 for additional information.

4.2.22 PHY SPECIAL CONTROL / STATUS REGISTER

Index (In Decimal): 31 Size: 16 bits

Bits	Description	Type	Default
15:13	**RESERVED**	RO	-
12	**Auto-negotiation done indication** 0 = Auto-negotiation is not done or disabled (or not active) 1 = Auto-negotiation is done **Note:** This is a duplicate of register 1.5, however reads to register 31 do not clear status bits.	RO	0b
11:5	**RESERVED**	RO	-
4:2	**Speed Indication** HCDSPEED value: [001]=10Mbps Half-duplex [101]=10Mbps Full-duplex [010]=100BASE-TX Half-duplex [110]=100BASE-TX Full-duplex	RO	Note 4-9
1:0	**RESERVED**	RO	-

Note 4-9 Set according to the results of Auto-Negotiation.

© 2009-2016 Microchip Technology Inc.

4.3 Advanced PHY Registers

The advanced PHY registers are accessed using the following procedure:

1. Write to the Advanced Register Address Port with the Read bit set high, and the address of the desired advanced register in the Register Address field.
2. Read the contents of the selected register from Advanced Register Read Data Port.

Note: The advanced registers cannot be written. All advanced registers are comprised of read-only (RO), or read-to-clear (RC) bits.

4.3.1 ADVANCED REGISTER MAPPING

TABLE 4-3: ADVANCED REGISTER MAPPING

REGISTER NUMBER	REGISTER NAME
U0	User Status 1 Register
U1	User Status 2 Register
U2	Receive Error-Free Packets Counter High Register
U3	Receive Error-Free Packets Counter Mid Register
U4	Receive Error-Free Packets Counter Low Register
U5	CRC Error Counter High Register
U6	CRC Error Counter Mid Register
U7	
U8	Receive Error During Data Counter Register
U9	Receive Error During Idle Counter Register
U10	Transmit Packet Counter High Register
U11	Transmit Packet Counter Mid Register
U12	Transmit Packet Counter Low Register

4.3.2 USER STATUS 1 REGISTER

Index: U0 Size: 16 bits

Bits	Description	Type	Default
15	**PLLREADY** 0 = PLL is not locked 1 = PLL is locked	RO	0b
14	**POLARITY_INV_3** This bit indicates reverse polarity on channel 3 when operating in 1000BASE-T mode. 0 = Channel 3 polarity is correct 1 = Channel 3 polarity is reversed	RO	0b
13	**POLARITY_INV_2** This bit indicates reverse polarity on channel 2 when operating in 1000BASE-T mode. 0 = Channel 2 polarity is correct 1 = Channel 2 polarity is reversed	RO	0b
12	**POLARITY_INV_1** This bit indicates reverse polarity on channel 1 when operating in 1000BASE-T mode. 0 = Channel 1 polarity is correct 1 = Channel 1 polarity is reversed	RO	0b
11	**POLARITY_INV_0** This bit indicates reverse polarity on channel 0 when operating in 1000BASE-T mode. 0 = Channel 0 polarity is correct 1 = Channel 0 polarity is reversed	RO	0b
10:0	**RESERVED**	RO	-

© 2009-2016 Microchip Technology Inc.

4.3.3 USER STATUS 2 REGISTER

Index: U1 Size: 16 bits

Bits	Description	Type	Default
15	**XOVER Resolution 0:1** 0 = Channel 0 and Channel 1 resolved as MDI. 1 = Channel 0 and Channel 1 resolved as MDI-X.	RO	0b
14	**XOVER Resolution 2:3** 0 = Channel 2 and Channel 3 resolved as MDI. 1 = Channel 2 and Channel 3 resolved as MDI-X.	RO	0b
13	**Speed Optimize Status** When set, indicates the link was established using the Speed Optimize mechanism. **Note:** Refer to Section 3.9.5, "Speed Optimizer," on page 29 for additional information.	RO	0b
12:0	**RESERVED**	RO	-

4.3.4 RECEIVE ERROR-FREE PACKETS COUNTER HIGH REGISTER

Index: U2 Size: 16 bits

Bits	Description	Type	Default
15:0	**RCVGPKT[47:32]** Counts the received error-free packets. Contains the 16 upper bits of the 48-bit counter. Reading this register resets all bits in the Receive Error-Free Packets Counter.	RO/ RC	0000h

Note: The 48-bit receive error-free packets counter is split across 3 registers. In order to read the counter correctly, the registers must be read in the following order: Receive Error-Free Packets Counter Low Register, Receive Error-Free Packets Counter Mid Register, Receive Error-Free Packets Counter High Register. After reading the high register, the counter will be automatically cleared.

4.3.5 RECEIVE ERROR-FREE PACKETS COUNTER MID REGISTER

Index: U3 Size: 16 bits

Bits	Description	Type	Default
15:0	**RCVGPKT[31:16]** Counts the received error-free packets. Contains the 16 middle bits of the 48-bit counter.	RO	0000h

Note: The 48-bit receive error-free packets counter is split across 3 registers. In order to read the counter correctly, the registers must be read in the following order: Receive Error-Free Packets Counter Low Register, Receive Error-Free Packets Counter Mid Register, Receive Error-Free Packets Counter High Register. After reading the high register, the counter will be automatically cleared.

4.3.6 RECEIVE ERROR-FREE PACKETS COUNTER LOW REGISTER

Index: U4 Size: 16 bits

Bits	Description	Type	Default
15:0	**RCVGPKT[15:0]** Counts the received error-free packets. Contains the 16 low-order bits of the 48-bit counter.	RO	0000h

Note: The 48-bit receive error-free packets counter is split across 3 registers. In order to read the counter correctly, the registers must be read in the following order: Receive Error-Free Packets Counter Low Register, Receive Error-Free Packets Counter Mid Register, Receive Error-Free Packets Counter High Register. After reading the high register, the counter will be automatically cleared.

© 2009-2016 Microchip Technology Inc.

4.3.7 CRC ERROR COUNTER HIGH REGISTER

Index: U5 Size: 16 bits

Bits	Description	Type	Default
15:0	**CRCERR[47:32]** Counts the CRC errors, which are generated by the CRC checker circuit. Contains the 16 upper bits of the 48-bit counter. Reading this register resets all bits in the CRC Error Counter.	RO/ RC	0000h

Note: The 48-bit CRC error counter is split across 3 registers. In order to read the counter correctly, the registers must be read in the following order: CRC Error Counter Mid Register, CRC Error Counter High Register. After reading the high register, the counter will be automatically cleared.

4.3.8 CRC ERROR COUNTER MID REGISTER

Index: U6 Size: 16 bits

Bits	Description	Type	Default
15:0	**CRCERR[31:16]** Counts the CRC errors, which are generated by the CRC checker circuit. Contains the 16 middle bits of the 48-bit counter.	RO	0000h

Note: The 48-bit CRC error counter is split across 3 registers. In order to read the counter correctly, the registers must be read in the following order: CRC Error Counter Mid Register, CRC Error Counter High Register. After reading the high register, the counter will be automatically cleared.

4.3.9 CRC ERROR COUNTER LOW REGISTER

Index: U7 Size: 16 bits

Bits	Description	Type	Default
15:0	**CRCERR[15:0]** Counts the CRC errors, which are generated by the CRC checker circuit. Contains the 16 low-order bits of the 48-bit counter.	RO	0000h

Note: The 48-bit CRC error counter is split across 3 registers. In order to read the counter correctly, the registers must be read in the following order: CRC Error Counter Mid Register, CRC Error Counter High Register. After reading the high register, the counter will be automatically cleared.

© 2009-2016 Microchip Technology Inc.

4.3.10 RECEIVE ERROR DURING DATA COUNTER REGISTER

Index: U8 Size: 16 bits

Bits	Description	Type	Default
15:0	**RXERIND_DATA[15:0]** Counts the assertions of RXER (going from low to high) when RXDV is high. **Note:** The RXER and RXDV signals are extrapolated from the RXCTRL pin.	RO/ RC	0000h

4.3.11 RECEIVE ERROR DURING IDLE COUNTER REGISTER

Index: U9 Size: 16 bits

Bits	Description	Type	Default
15:0	**RXERIND_IDLE[15:0]** Counts the assertions of RXER (going from low to high) when RXDV is low. **Note:** The RXER and RXDV signals are extrapolated from the RXCTRL pin.	RO/ RC	0000h

4.3.12 TRANSMIT PACKET COUNTER HIGH REGISTER

Index: U10 Size: 16 bits

Bits	Description	Type	Default
15:0	**TXPKT[47:32]** Counts the number of transmitted packets. Contains the 16 upper bits of the 48-bit counter. Reading this register resets all bits in the Transmit Packet Counter.	RO/ RC	0000h

Note: The 48-bit transmit packet counter is split across 3 registers. In order to read the counter correctly, the registers must be read in the following order: Transmit Packet Counter Low Register, Transmit Packet Counter Mid Register, Transmit Packet Counter High Register. After reading the high register, the counter will be automatically cleared.

© 2009-2016 Microchip Technology Inc.

4.3.13 TRANSMIT PACKET COUNTER MID REGISTER

Index: U11 Size: 16 bits

Bits	Description	Type	Default
15:0	**TXPKT[31:16]** Counts the number of transmitted packets. Contains the 16 middle bits of the 48-bit counter.	RO	0000h

Note: The 48-bit transmit packet counter is split across 3 registers. In order to read the counter correctly, the registers must be read in the following order: Transmit Packet Counter Low Register, Transmit Packet Counter Mid Register, Transmit Packet Counter High Register. After reading the high register, the counter will be automatically cleared.

4.3.14 TRANSMIT PACKET COUNTER LOW REGISTER

Index: U12 Size: 16 bits

Bits	Description	Type	Default
15:0	**TXPKT[15:0]** Counts the number of transmitted packets. Contains the 16 low-order bits of the 48-bit counter.	RO	0000h

Note: The 48-bit transmit packet counter is split across 3 registers. In order to read the counter correctly, the registers must be read in the following order: Transmit Packet Counter Low Register, Transmit Packet Counter Mid Register, Transmit Packet Counter High Register. After reading the high register, the counter will be automatically cleared.

5.0 OPERATIONAL CHARACTERISTICS

5.1 Absolute Maximum Ratings*

Supply Voltage (VDD25IO) (Note 5-1) . . . . . -0.5V to +2.75V

Analog Supply Voltage (VDD12A) (Note 5-1). . . . . 0.5V to +1.5V

Digital Core Supply Voltage (VDD12CORE) (Note 5-1) . . . . . -0.5V to +1.5V

Ethernet Magnetics Supply Voltage . . . . . -0.5V to +3.6V

Positive voltage on signal pins, with respect to ground (Note 5-2). . . . . +6.0V

Negative voltage on signal pins, with respect to ground (Note 5-3) . . . . . -0.5V

Positive voltage on XI, with respect to ground . . . . . +3.6V

Positive voltage on XO, with respect to ground . . . . . +2.5V

Ambient Operating Temperature in Still Air (T_A) . . . . . Note 5-4

Junction to Ambient (θ_{JA}) . . . . . 24.4^{o}C/W

Junction to Top of Package (Ψ_{JT}) . . . . . 0.1^{o}C/W

Storage Temperature . . . . . -55°C to +150°C

Lead Temperature Range . . . . . Refer to JEDEC Spec. J-STD-020

Latch-up Performance per EIA/JESD 78 . . . . . +/-150mA

Note 5-1 When powering this device from laboratory or system power supplies, it is important that the absolute maximum ratings not be exceeded or device failure can result. Some power supplies exhibit voltage spikes on their outputs when AC power is switched on or off. In addition, voltage transients on the AC power line may appear on the DC output. If this possibility exists, it is suggested that a clamp circuit be used.

Note 5-2 This rating does not apply to the following pins: XI, XO, ETHRBIAS.

Note 5-3 This rating does not apply to the following pins: ETHRBIAS.

Note 5-4 0°C to +70°C for commercial version, -40°C to +85°C for industrial version.

*Stresses exceeding those listed in this section could cause permanent damage to the device. This is a stress rating only. Exposure to absolute maximum rating conditions for extended periods may affect device reliability. Functional operation of the device at any condition exceeding those indicated in Section 5.2, "Operating Conditions**", Section 5.4, "DC Specifications", or any other applicable section of this specification is not implied. Note, device signals are *NOT* 5 volt tolerant unless specified otherwise.

5.2 Operating Conditions**

Supply Voltage (VDD25IO). . . . . +2.25V to +2.75V

Supply Voltage (VDD12A) . . . . . +1.14V to +1.26V

Digital Core Supply Voltage (VDD12CORE) . . . . . +1.14V to +1.26V

Ethernet Magnetics Supply Voltage . . . . . +2.25V to +3.6V

Ambient Operating Temperature in Still Air (T_A) . . . . . Note 5-4

**Proper operation of the device is guaranteed only within the ranges specified in this section. After the device has completed power-up, VDD25IO and the magnetics power supply must maintain their voltage level within +/-10%. Varying the voltage greater than +/-10% after the device has completed power-up can cause errors in device operation.

© 2009-2016 Microchip Technology Inc.

5.3 Power Consumption

This section details the power consumption of the device as measured during various modes of operation. Power consumption values are provided for both the device-only, and for the device plus Ethernet components. Power dissipation is impacted by temperature, supply voltage, and external source/sink requirements. All measurements were taken at +25°C.

TABLE 5-1: POWER CONSUMPTION - 1000BASE-T LINKED

Parameter	Typical	Unit
Supply Current (VDD25IO) (@ +2.5V)	15	mA
Supply Current (VDD12CORE, VDD12BIAS, VDD12PLL, VDD12A) (@ +1.2V)	460	mA
External Magnetics Current (@ +2.5V)	197	mA
Total Power Dissipation (Device Only)	589	mW
Total Power Dissipation (Device and Ethernet components)	1081	mW

TABLE 5-2: POWER CONSUMPTION - 100BASE-TX LINKED

Parameter	Typical	Unit
Supply Current (VDD25IO) (@ +2.5V)	5	mA
Supply Current (VDD12CORE, VDD12BIAS, VDD12PLL, VDD12A) (@ +1.2V)	85	mA
External Magnetics Current (@ +2.5V)	57	mA
Total Power Dissipation (Device Only)	115	mW
Total Power Dissipation (Device and Ethernet components)	258	mW

TABLE 5-3: POWER CONSUMPTION - 10BASE-T LINKED

Parameter	Typical	Unit
Supply Current (VDD25IO) (@ +2.5V)	4	mA
Supply Current (VDD12CORE, VDD12BIAS, VDD12PLL, VDD12A) (@ +1.2V)	33	mA
External Magnetics Current (@ +2.5V)	118	mA
Total Power Dissipation (Device Only)	49	mW
Total Power Dissipation (Device and Ethernet components)	344	mW

© 2009-2016 Microchip Technology Inc.

TABLE 5-4: POWER CONSUMPTION - ENERGY DETECT

Parameter	Typical	Unit
Supply Current (VDD25IO) (@ +2.5V)	11	mA
Supply Current (VDD12CORE, VDD12BIAS, VDD12PLL, VDD12A) (@ +1.2V)	28	mA
External Magnetics Current (@ +2.5V)	15	mA
Total Power Dissipation (Device Only)	61	mW
Total Power Dissipation (Device and Ethernet components)	98	mW

TABLE 5-5: POWER CONSUMPTION - HARDWARE POWER DOWN (PLL ENABLED)

Parameter	Typical	Unit
Supply Current (VDD25IO) (@ +2.5V)	0.12	mA
Supply Current (VDD12CORE, VDD12BIAS, VDD12PLL, VDD12A) (@ +1.2V)	17.29	mA
External Magnetics Current (@ +2.5V)	7.00	mA
Total Power Dissipation (Device Only)	21.16	mW
Total Power Dissipation (Device and Ethernet components)	44.26	mW

TABLE 5-6: POWER CONSUMPTION - HARDWARE POWER DOWN (PLL DISABLED)

Parameter	Typical	Unit
Supply Current (VDD25IO) (@ +2.5V)	0.12	mA
Supply Current (VDD12CORE, VDD12BIAS, VDD12PLL, VDD12A) (@ +1.2V)	4.39	mA
External Magnetics Current (@ +2.5V)	0.02	mA
Total Power Dissipation (Device Only)	5.68	mW
Total Power Dissipation (Device and Ethernet components)	5.73	mW

© 2009-2016 Microchip Technology Inc.

5.4 DC Specifications

TABLE 5-7: I/O BUFFER CHARACTERISTICS

Parameter	Symbol	Min	Typical	Max	Units	Notes
IS Type Input Buffer						
Low Input Level	V_{ILI}	-0.3			V	
High Input Level	V_{IHI}			3.6	V	
Negative-Going Threshold	V_{ILT}	0.64	1.15	1.76	V	Schmitt trigger
Positive-Going Threshold	V_{IHT}	0.81	1.29	1.90	V	Schmitt trigger
SchmittTrigger Hysteresis (V_{IHT} - V_{ILT})	V_{HYS}	102	136	288	mV	
Input Leakage (V_{IN} = VSS or VDD25IO)	I_{IH}	-10		10	uA	Note 5-5
Input Capacitance	C_{IN}			3	pF	
O6 Type Buffers						
Low Output Level	V_{OL}			0.4	V	I_{OL} = 6mA
High Output Level	V_{OH}	VDD25IO - 0.4			V	I_{OH} = -6mA
O8 Type Buffers						
Low Output Level	V_{OL}			0.4	V	I_{OL} = 8mA
High Output Level	V_{OH}	VDD25IO - 0.4			V	I_{OH} = -8mA
ICLK Type Buffer (XI Input)						Note 5-6
Low Input Level	V_{ILI}	-0.3		0.5	V	
High Input Level	V_{IHI}	0.9		3.6	V	

Note 5-5 This specification applies to all inputs and tri-stated bi-directional pins. Internal pull-down and pull-up resistors add +/- 50uA per-pin (typical).

Note 5-6 XI can optionally be driven from a 25MHz single-ended clock oscillator.

TABLE 5-8: 1000BASE-T TRANSCEIVER CHARACTERISTICS

Parameter	Symbol	Min	Typ	Max	Units	Notes
Peak Differential Output Voltage	V_{OP}	670		820	mV	Note 5-7
Signal Amplitude Symmetry	V_{SS}			1	%	Note 5-7
Signal Scaling	V_{SC}			2	%	Note 5-8
Output Droop	V_{OD}	73.1			%	Note 5-7
Transmission Distortion				10	mV	Note 5-9

Note 5-7 IEEE 802.ab Test Mode 1

Note 5-8 From 1/2 of average V_{OP}, Test Mode 1

Note 5-9 IEEE 802.ab distortion processing

TABLE 5-9: 100BASE-TX TRANSCEIVER CHARACTERISTICS

Parameter	Symbol	Min	Typ	max	units	notes
Peak Differential Output Voltage High	V_{PPH}	950	-	1050	mVpk	Note 5-10
Peak Differential Output Voltage Low	V_{PPL}	-950	-	-1050	mVpk	Note 5-10
Signal Amplitude Symmetry	V_{SS}	98	-	102	%	Note 5-10
Signal Rise and Fall Time	T_{RF}	3.0	-	5.0	nS	Note 5-10
Rise and Fall Symmetry	T_{RFS}	-	-	0.5	nS	Note 5-10
Duty Cycle Distortion	D_{CD}	35	50	65	%	Note 5-11
Overshoot and Undershoot	V_{OS}	-	-	5	%	
Jitter				1.4	nS	Note 5-12

Note 5-10 Measured at line side of transformer, line replaced by 100Ω (+/- 1%) resistor.

Note 5-11 Offset from 16nS pulse width at 50% of pulse peak.

Note 5-12 Measured differentially.

TABLE 5-10: 10BASE-T TRANSCEIVER CHARACTERISTICS

Parameter	Symbol	Min	Typ	Max	Units	Notes
Transmitter Peak Differential Output Voltage	V_{OUT}	2.2	2.5	2.8	V	Note 5-13
Receiver Differential Squelch Threshold	V_{DS}	300	420	585	mV	

Note 5-13 Min/max voltages guaranteed as measured with 100Ω resistive load.

© 2009-2016 Microchip Technology Inc.

5.5 AC Specifications

This section details the various AC timing specifications of the device.

Note:	The RGMII timing adheres to the HP RGMII Specification Version 2.0. Refer to this specification for additional RGMII timing information

Note:	The Ethernet TX/RX pin timing adheres to the IEEE 802.3 specification. Refer to the IEEE 802.3 specification for detailed Ethernet timing information.

5.5.1 EQUIVALENT TEST LOAD

Output timing specifications assume a 25pF equivalent test load, unless otherwise noted, as illustrated in Figure 5-1.

FIGURE 5-1: OUTPUT EQUIVALENT TEST LOAD

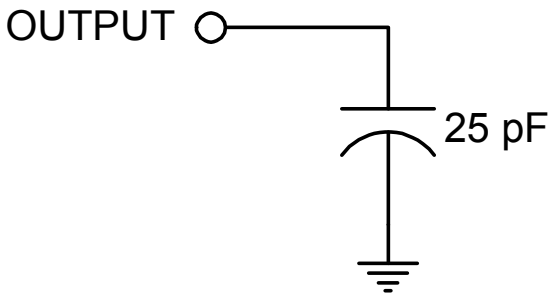

5.5.2 POWER SEQUENCE TIMING

Power supplies must adhere to the following rules:

- All power supplies of the same voltage must be powered up/down together.
- There is no power-up sequencing requirement, however all power supplies must reach operational levels within the time periods specified in Table 5-11.
- There is no power-down sequencing or timing requirement, however the device must not be powered for an extended period of time without all supplies at operational levels.
- Following initial power-on, or if a power supply brownout occurs (for example, one or more supplies drops below operational limits), a power-on reset must be executed once all power supplies reach operational levels. Refer to Section 5.5.3, "Power-On Hardware Reset Timing," on page 67 for power-on reset requirements.
- Do not drive input signals without power supplied to the device.

Note: Violation of these specifications may damage the device.

FIGURE 5-2: POWER SEQUENCE TIMING

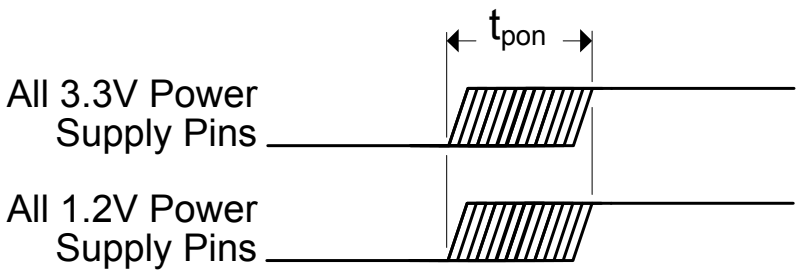

TABLE 5-11: POWER SEQUENCE TIMING VALUES

Symbol	Description	Min	Typ	Max	Units
t_{pon}	Power supply turn on time	0		25	mS

© 2009-2016 Microchip Technology Inc.

5.5.3 POWER-ON HARDWARE RESET TIMING

Figure 5-3 illustrates the nRESET, configuration strap/pin, and CONFIG[3:0] timing requirements in relation to power-on. A hardware reset (nRESET assertion) is required following power-up. For proper operation, nRESET must be asserted for no less than t_{rstia}. The nRESET pin can be asserted at any time, but must not be deasserted before t_{purstd} after all external power supplies have reached operational levels. In order for valid configuration strap values to be read at power-up, the t_{css} and t_{csh} timing constraints must be followed. In order for CONFIG[3:0] values to be read at power-up, the t_{cs} and t_{ch} timing constraints must be followed. Refer to Section 3.6.1, "Hardware Reset (nRESET)," on page 22 for additional information.

FIGURE 5-3: HARDWARE RESET TIMING

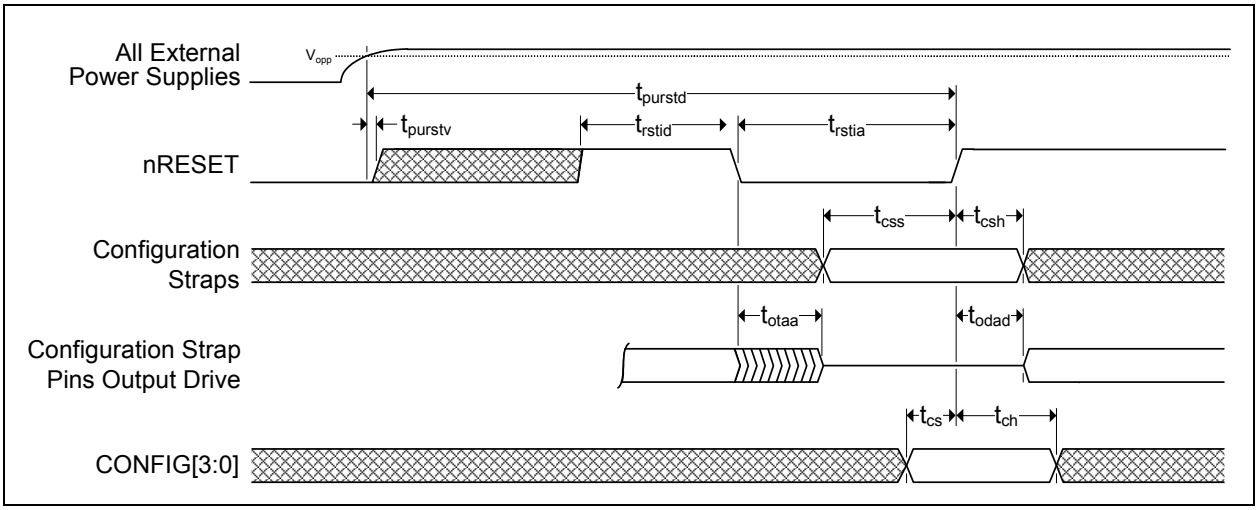

TABLE 5-12: HARDWARE RESET TIMING VALUES

Symbol	Description	Min	Typ	Max	Units
t_{purstd}	External power supplies at operational level to nRESET deassertion	25			mS
t_{purstv}	External power supplies at operational level to nRESET valid	0			nS
t_{rstid}	nRESET input deassertion time	10			µS
t_{rstia}	nRESET input assertion time	100			µS
t_{css}	Configuration strap pins setup to nRESET deassertion	200			nS
t_{csh}	Configuration strap pins hold after nRESET deassertion	10			nS
t_{otaa}	Output tri-state after nRESET assertion			50	nS
t_{odad}	Output drive after deassertion	40		800	nS
t_{cs}	CONFIG[3:0] setup to nRESET deassertion	0			nS
t_{ch}	CONFIG[3:0] hold after nRESET deassertion	1			uS

Note 1: Device configuration straps are latched as a result of nRESET assertion. Refer to Section 3.8.1.1, "Configuration Straps," on page 24 details. Configuration straps must only be pulled high or low and must not be driven as inputs.

2: nRESET deassertion must be monotonic.

5.5.4 RESET TIMING

Figure 5-4 illustrates the nRESET pin timing requirements. For proper operation, nRESET must be asserted for no less than t_{rstia}. In order for valid configuration strap values to be read upon a nRESET assertion, the t_{css} and t_{csh} timing constraints must be followed. In order for CONFIG[3:0] values to be read at power-up, the t_{cs} and t_{ch} timing constraints must be followed. Refer to Section 3.6.1, "Hardware Reset (nRESET)," on page 22 for additional information.

Note: A hardware reset (nRESET assertion) is required following power-up. Refer to Section 5.5.3, "Power-On Hardware Reset Timing," on page 67 for additional information.

FIGURE 5-4: RESET TIMING

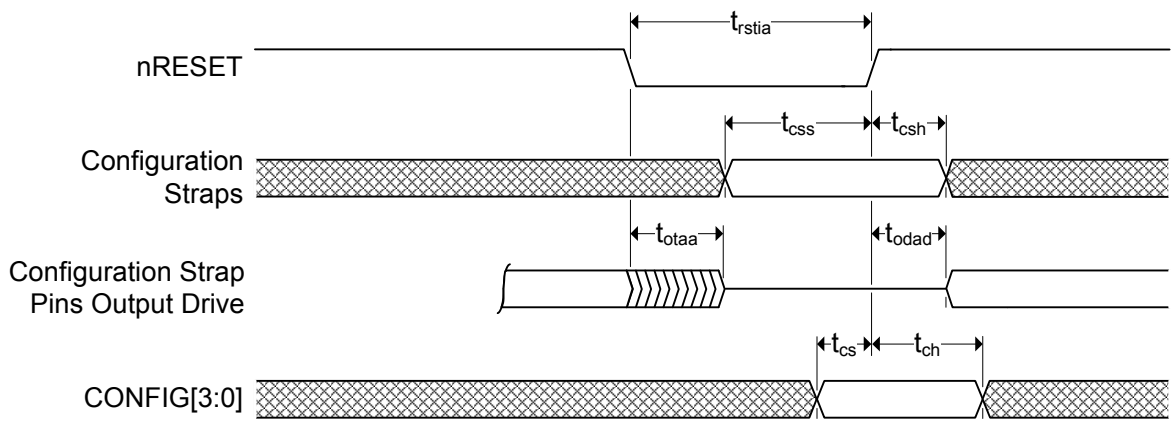

TABLE 5-13: RESET TIMING VALUES

Symbol	Description	Min	Typ	Max	Units
t_{rstia}	nRESET input assertion time	1			µS
t_{css}	Configuration strap pins setup to nRESET deassertion	200			nS
t_{csh}	Configuration strap pins hold after nRESET deassertion	10			nS
t_{otaa}	Output tri-state after nRESET assertion			50	nS
t_{odad}	Output drive after deassertion	40		800	nS
t_{cs}	CONFIG[3:0] setup to nRESET deassertion	0			nS
t_{ch}	CONFIG[3:0] hold after nRESET deassertion	1			uS

Note: Device configuration straps are latched as a result of nRESET assertion. Refer to Section 3.8.1.1, "Configuration Straps," on page 24 details. Configuration straps must only be pulled high or low and must not be driven as inputs.

© 2009-2016 Microchip Technology Inc.

5.5.5 RGMII TIMING

This section specifies the RGMII interface transmit and receive timing. The RGMII interface supports the independent enabling/disabling of the PHY TXC and RXC delays, each with unique timing properties. These timing are reflected in the following sub-sections. Please refer to Section 3.3, "RGMII Interface," on page 18 for additional details.

> **Note:** All RGMII timing specifications assume a point-to-point test circuit as defined in Figure 3 of the RGMII specification 1.3.

5.5.5.1 PHY TXC Delay Enabled Timing

FIGURE 5-5: RGMII PHY TXC DELAY ENABLED TIMING

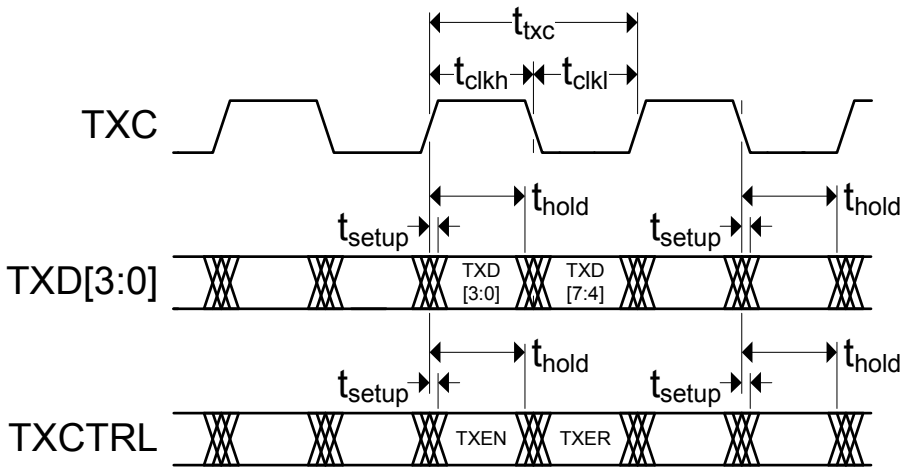

TABLE 5-14: RGMII PHY TXC DELAY ENABLED TIMING VALUES

Symbol	Description	Min	Typ	Max	Units
t_{txc}	TXC period	Note 5-1	Note 5-2	Note 5-3	ns
t_{clkh}	TXC high time	Note 5-4	50	Note 5-5	%
t_{clkl}	TXC low time	Note 5-4	50	Note 5-5	%
t_{setup}	TXD[3:0], TXCTRL setup time to edge of TXC	-0.9			ns
t_{hold}	TXD[3:0], TXCTRL hold time after edge of TXC	2.7			ns

Note 5-1 7.2ns for 1000BASE-T operation, 36ns for 100BASE-TX operation, 360ns for 10BASE-T operation. Minimum limits are non-sustainable long term.

Note 5-2 8ns for 1000BASE-T operation, 40ns for 100BASE-TX operation, 400ns for 10BASE-T operation.

Note 5-3 8.8ns for 1000BASE-T operation, 44ns for 100BASE-TX operation, 440ns for 10BASE-T operation. Maximum limits are non-sustainable long term.

Note 5-4 45% for 1000BASE-T operation, 40% for 100BASE-TX or 10BASE-T operation.

Note 5-5 55% for 1000BASE-T operation, 60% for 100BASE-TX or 10BASE-T operation.

5.5.5.2 PHY TXC Delay Disabled Timing

FIGURE 5-6: RGMII PHY TXC DELAY DISABLED TIMING

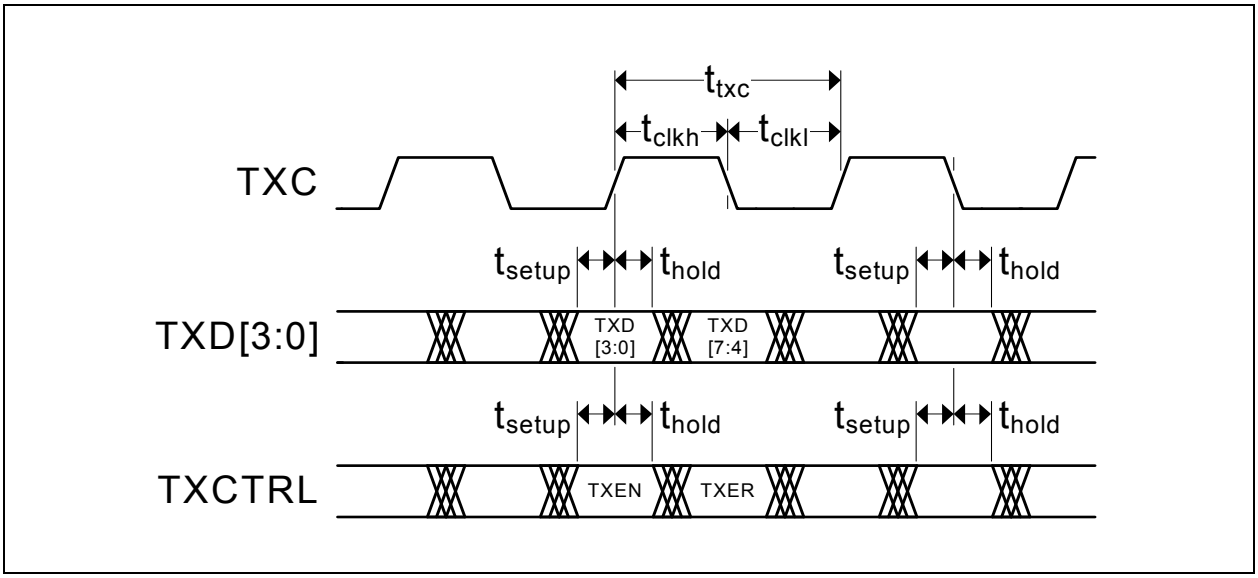

TABLE 5-15: RGMII PHY TXC DELAY DISABLED TIMING VALUES

Symbol	Description	Min	Typ	Max	Units
t_{txc}	TXC period	Note 5-6	Note 5-7	Note 5-8	ns
t_{clkh}	TXC high time	Note 5-9	50	Note 5-10	%
t_{clkl}	TXC low time	Note 5-9	50	Note 5-10	%
t_{setup}	TXD[3:0], TXCTRL setup time to edge of TXC	1.0			ns
t_{hold}	TXD[3:0], TXCTRL hold time after edge of TXC	0.8			ns

Note 5-6 7.2ns for 1000BASE-T operation, 36ns for 100BASE-TX operation, 360ns for 10BASE-T operation. Minimum limits are non-sustainable long term.

Note 5-7 8ns for 1000BASE-T operation, 40ns for 100BASE-TX operation, 400ns for 10BASE-T operation.

Note 5-8 8.8ns for 1000BASE-T operation, 44ns for 100BASE-TX operation, 440ns for 10BASE-T operation. Maximum limits are non-sustainable long term.

Note 5-9 45% for 1000BASE-T operation, 40% for 100BASE-TX or 10BASE-T operation.

Note 5-10 55% for 1000BASE-T operation, 60% for 100BASE-TX or 10BASE-T operation.

© 2009-2016 Microchip Technology Inc.

5.5.5.3 PHY RXC Delay Enabled Timing

FIGURE 5-7: RGMII PHY RXC DELAY ENABLED TIMING

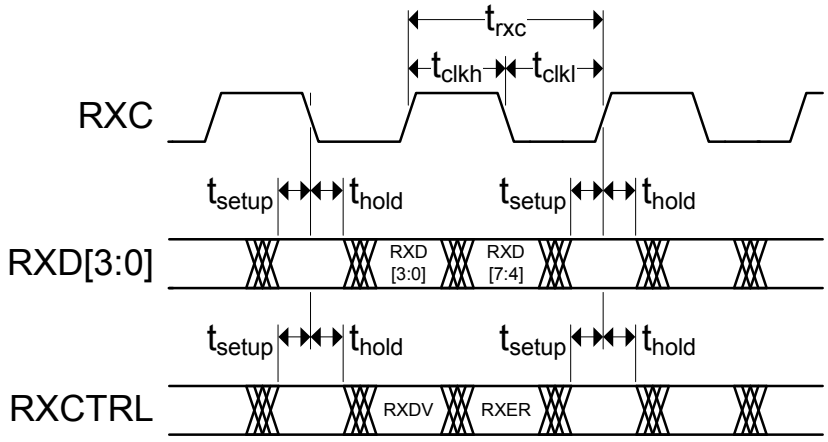

TABLE 5-16: RGMII PHY RXC DELAY ENABLED TIMING VALUES

Symbol	Description	Min	Typ	Max	Units
t_{rxc}	RXC period	Note 5-11	Note 5-12	Note 5-13	ns
t_{clkh}	RXC high time	Note 5-14	50	Note 5-15	%
t_{clkl}	RXC low time	Note 5-14	50	Note 5-15	%
t_{setup}	RXD[3:0], RXCTRL output setup from edge of RXC	1.2			ns
t_{hold}	RXD[3:0], RXCTRL output hold from edge of RXC	1.2			ns

Note 5-11 7.2ns for 1000BASE-T operation, 36ns for 100BASE-TX operation, 360ns for 10BASE-T operation. Minimum limits are non-sustainable long term.

Note 5-12 8ns for 1000BASE-T operation, 40ns for 100BASE-TX operation, 400ns for 10BASE-T operation.

Note 5-13 8.8ns for 1000BASE-T operation, 44ns for 100BASE-TX operation, 440ns for 10BASE-T operation. Maximum limits are non-sustainable long term.

Note 5-14 45% for 1000BASE-T operation, 40% for 100BASE-TX or 10BASE-T operation.

Note 5-15 55% for 1000BASE-T operation, 60% for 100BASE-TX or 10BASE-T operation.

© 2009-2016 Microchip Technology Inc.

5.5.5.4 PHY RXC Delay Disabled Timing

FIGURE 5-8: RGMII PHY RXC DELAY DISABLED TIMING

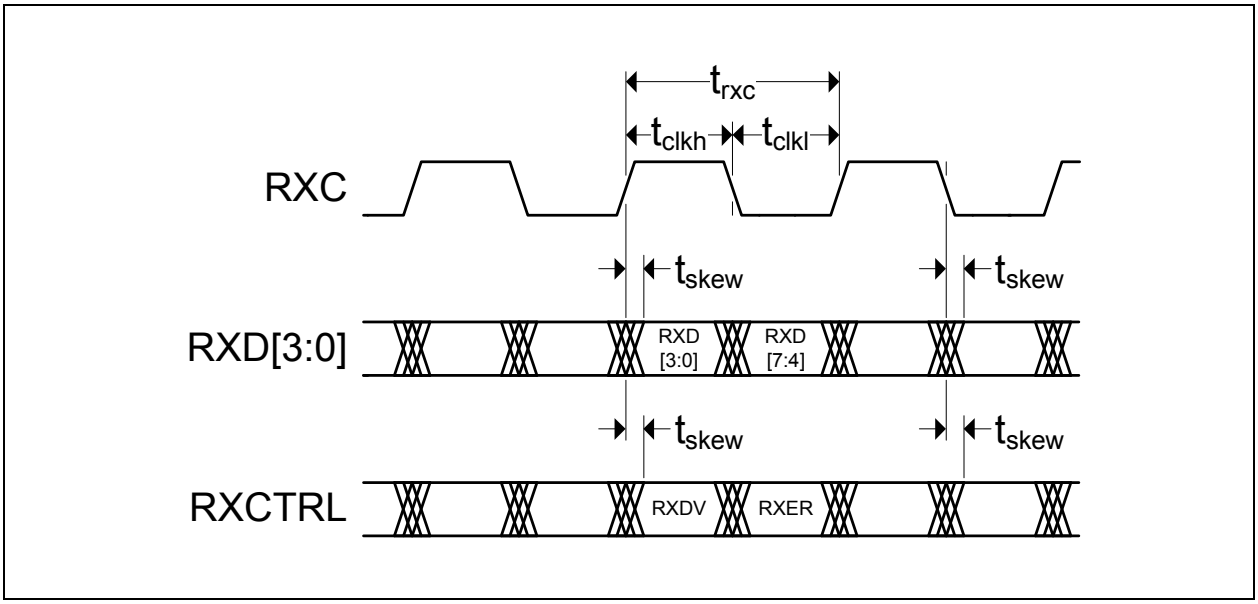

TABLE 5-17: RGMII PHY RXC DELAY DISABLED TIMING VALUES

Symbol	Description	Min	Typ	Max	Units
t_{rxc}	RXC period	Note 5-16	Note 5-17	Note 5-18	ns
t_{clkh}	RXC high time	Note 5-19	50	Note 5-20	%
t_{clkl}	RXC low time	Note 5-19	50	Note 5-20	%
t_{skew}	Data to clock output skew	-500		500	ps

Note 5-16 7.2ns for 1000BASE-T operation, 36ns for 100BASE-TX operation, 360ns for 10BASE-T operation. Minimum limits are non-sustainable long term.

Note 5-17 8ns for 1000BASE-T operation, 40ns for 100BASE-TX operation, 400ns for 10BASE-T operation.

Note 5-18 8.8ns for 1000BASE-T operation, 44ns for 100BASE-TX operation, 440ns for 10BASE-T operation. Maximum limits are non-sustainable long term.

Note 5-19 45% for 1000BASE-T operation, 40% for 100BASE-TX or 10BASE-T operation.

Note 5-20 55% for 1000BASE-T operation, 60% for 100BASE-TX or 10BASE-T operation.

© 2009-2016 Microchip Technology Inc.

5.5.6 SMI TIMING

This section specifies the SMI timing of the device. Please refer to Section 3.4, "Serial Management Interface (SMI)," on page 20 for additional details.

FIGURE 5-9: SMI TIMING

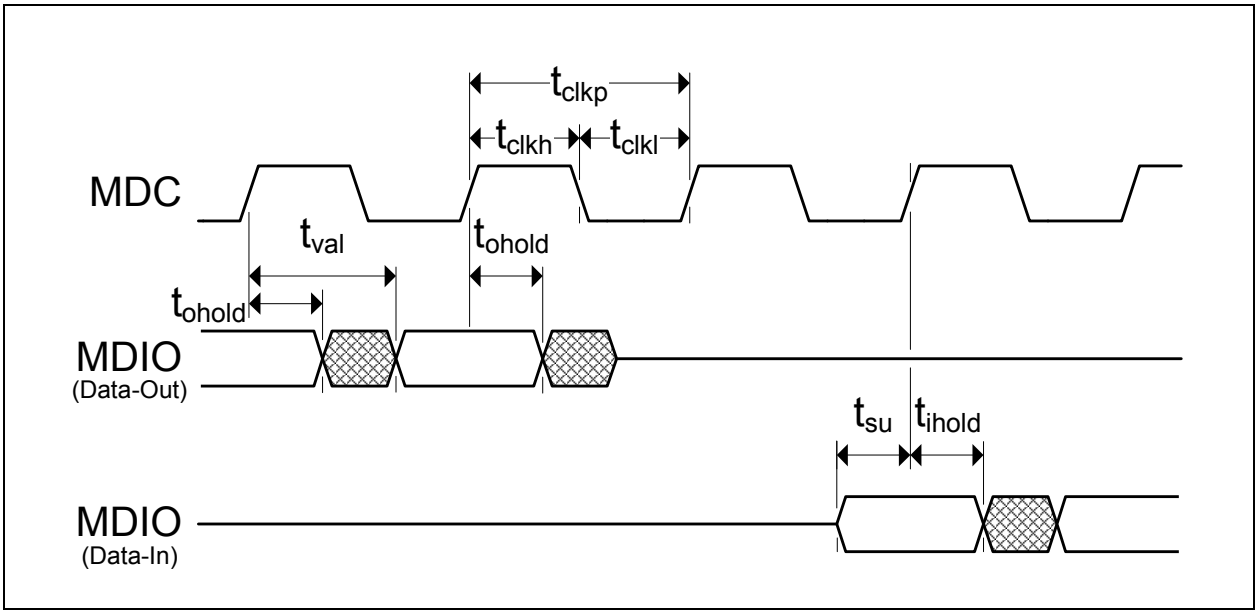

TABLE 5-18: SMI TIMING VALUES

Symbol	Description	Min	Max	Units	Notes
t_{clkp}	MDC period	400		ns	
t_{clkh}	MDC high time	160 (80%)		ns	
t_{clkl}	MDC low time	160 (80%)		ns	
t_{val}	MDIO (read from PHY) output valid from rising edge of MDC		300	ns	
t_{ohold}	MDIO (read from PHY) output hold from rising edge of MDC	0		ns	
t_{su}	MDIO (write to PHY) setup time to rising edge of MDC	10		ns	
t_{ihold}	MDIO (write to PHY) input hold time after rising edge of MDC	10		ns	

5.5.7 JTAG TIMING

This section specifies the JTAG timing of the device. Please refer to Section 3.9.7, "IEEE 1149.1 (JTAG) Boundary Scan," on page 30 for additional details.

FIGURE 5-10: JTAG TIMING

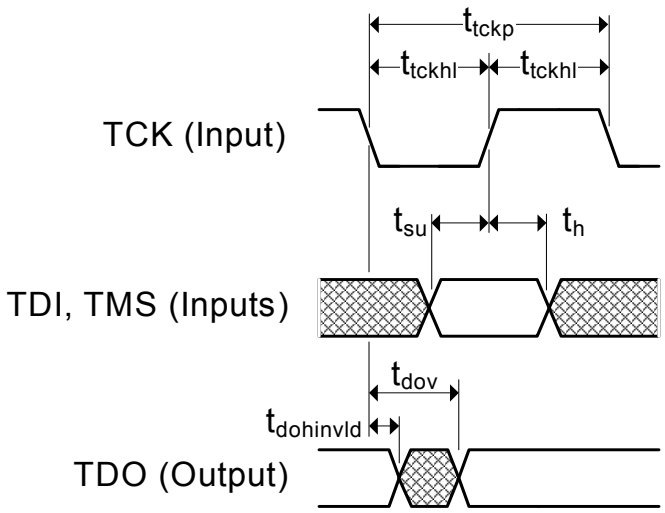

TABLE 5-19: JTAG TIMING VALUES

Symbol	Description	Min	Max	Units	Notes
t_{tckp}	TCK clock period	66.67		ns	
t_{tckhl}	TCK clock high/low time	t_{tckp}*0.4	t_{tckp}*0.6	ns	
t_{su}	TDI, TMS setup to TCK rising edge	10		ns	
t_h	TDI, TMS hold from TCK rising edge	10		ns	
t_{dov}	TDO output valid from TCK falling edge		16	ns	
$t_{dohinvld}$	TDO output invalid from TCK falling edge	0		ns	

© 2009-2016 Microchip Technology Inc.

5.6 Clock Circuit

The device can accept either a 25MHz crystal (preferred) or a 25 MHz single-ended clock oscillator (+/- 50ppm) input. If the single-ended clock oscillator method is implemented, XO should be left unconnected and XI should be driven with a nominal 0V-VDD25IO clock signal. The input clock duty cycle is 40% minimum, 50% typical and 60% maximum.

It is recommended that a crystal utilizing matching parallel load capacitors be used for the crystal input/output signals (XI/XO). See Table 5-20 for the recommended crystal specifications.

TABLE 5-20: CRYSTAL SPECIFICATIONS

Parameter	Symbol	Min	Nom	Max	Units	Notes
Crystal Cut	AT, typ					
Crystal Oscillation Mode	Fundamental Mode					
Crystal Calibration Mode	Parallel Resonant Mode					
Frequency	F_{fund}	-	25.000	-	MHz	
Frequency Tolerance @ 25°C	F_{tol}	-	-	+/-50	PPM	Note 5-21
Frequency Stability Over Temp	F_{temp}	-	-	+/-50	PPM	Note 5-21
Frequency Deviation Over Time	F_{age}	-	+/-3 to 5	-	PPM	Note 5-22
Total Allowable PPM Budget		-	-	+/-50	PPM	Note 5-23
Shunt Capacitance	C_O	-		7	pF	
Load Capacitance	C_L	-		18	pF	
Drive Level	P_W	300	-	-	uW	
Equivalent Series Resistance	R_1	-	-	50	Ohm	
Operating Temperature Range		Note 5-24	-	Note 5-25	^{o}C	
XI Pin Capacitance		-	3 typ	-	pF	Note 5-26
XO Pin Capacitance		-	3 typ	-	pF	Note 5-26

Note 5-21 The maximum allowable values for Frequency Tolerance and Frequency Stability are application dependent. Since any particular application must meet the IEEE +/-50 PPM Total PPM Budget, the combination of these two values must be approximately +/-45 PPM (allowing for aging).

Note 5-22 Frequency Deviation Over Time is also referred to as Aging.

Note 5-23 The total deviation for the Transmitter Clock Frequency is specified by IEEE 802.3u as +/- 50 PPM.

Note 5-24 0°C for commercial version, -40°C for industrial version.

Note 5-25 +70°C for commercial version, +85°C for industrial version.

Note 5-26 This number includes the pad, the bond wire and the lead frame. PCB capacitance is not included in this value. The XO/XI pin and PCB capacitance values are required to accurately calculate the value of the two external load capacitors. These two external load capacitors determine the accuracy of the 25.000 MHz frequency.

6.0 PACKAGE OUTLINE

6.1 56-QFN Package

FIGURE 6-1: 56-QFN PACKAGE

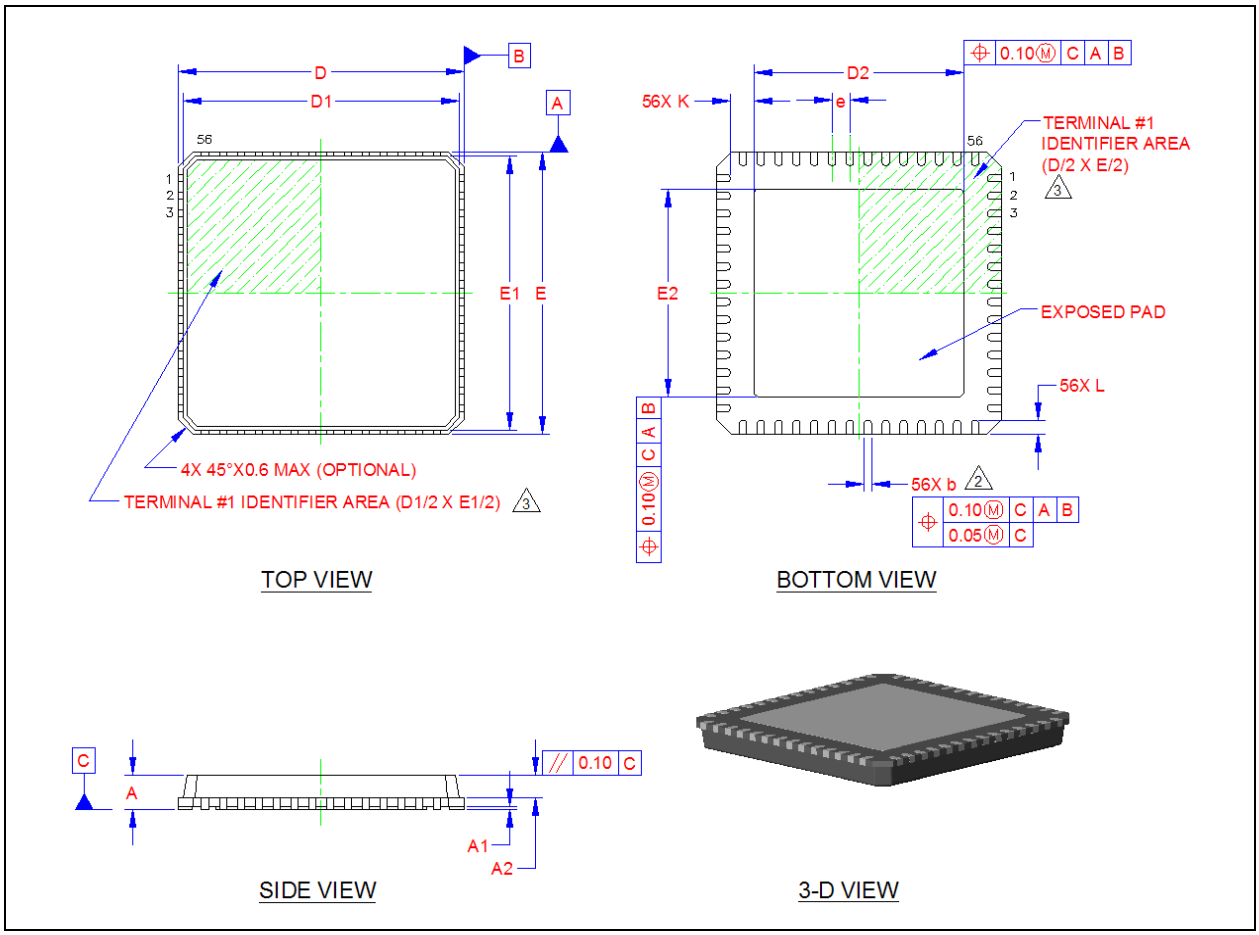

TABLE 6-1: 56-QFN DIMENSIONS

	Min	Nominal	Max	Remarks
A	0.70	0.85	1.00	Overall Package Height
A1	0.00	0.02	0.05	Standoff
A2	-	-	0.90	Mold Cap Thickness
D/E	7.85	8.00	8.15	X/Y Body Size
D1/E1	7.55	7.75	7.95	X/Y Mold Cap Size
D2/E2	5.80	5.90	6.00	X/Y Exposed Pad Size
L	0.30	0.40	0.50	Terminal Length
b	0.18	0.25	0.30	Terminal Width
K	0.55	-	-	Center Pad to Pin Clearance
e	0.50 BSC			Terminal Pitch

Note 1: All dimensions are in millimeters unless otherwise noted.

2: Dimension “b” applies to plated terminals and is measured between 0.15 and 0.30 mm from the terminal tip.

3: The pin 1 identifier may vary, but is always located within the zone indicated.

© 2009-2016 Microchip Technology Inc.

FIGURE 6-2: 56-QFN RECOMMENDED PCB LAND PATTERN

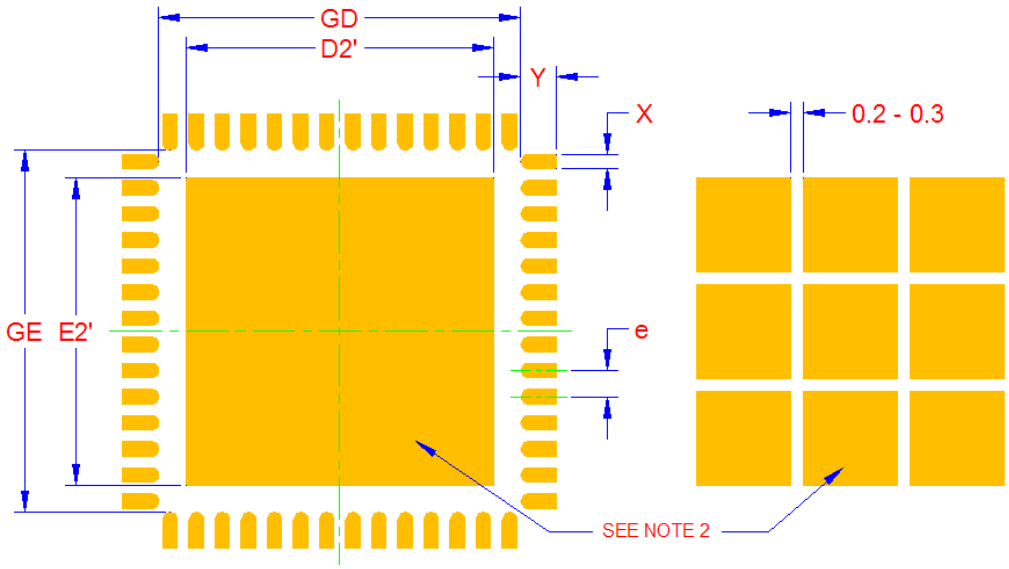

LAND PATTERN DIMENSIONS			
SYMBOL	MIN	NOM	MAX
GD/GE	6.93	-	7.05
D2'/E2'	-	5.90	5.90
X	-	0.28	0.28
Y	-	0.69	0.69
e		0.50	

NOTES:
1. THE USER MAY MODIFY THE PCB LAND PATTERN DESIGN AND DIMENSIONS BASED ON THEIR EXPERIENCE AND/OR PROCESS CAPABILITY
2. EXPOSED SOLDERABLE COPPER AREA OF THE CENTER PAD CAN BE EITHER SOLID OR SEGMENTED
3. MAXIMUM THERMAL AND ELECTRICAL PACKAGE PERFORMANCE IS ACHIEVED WHEN AN ARRAY OF SOLID VIAS IS INCORPORATED IN THE CENTER LAND PATTERN

PCB LAND PATTERN

APPENDIX A: DATA SHEET REVISION HISTORY

TABLE A-1: REVISION HISTORY

Revision Level & Date	Section/Figure/Entry	Correction
DS00001871C (09-01-16)	All	• Corrected grammar, spelling, and formatting inconsistencies throughout the document. • Trademark and Sales office listings updated.
	Section , RGMII 10/100/1000 Ethernet Transceiver with HP Auto-MDIX Support	Updated Highlights and Key Benefits sections.
	Figure 3-6	Updated image.
	Section 5.1, "Absolute Maximum Ratings*," on page 60	Reduced XI Absolute Maximum input voltage level to +3.6V.
	Table 5-7	Reduced XI Minimum Input High level to 0.9V.
	Table 5-20	Updated links to go to the correct referenced note numbers.
DS00001871B (10-27-15)	All	Trademark and Sales office listings updated.
	Table 3-8	In row 6, removed “CRS is active during Transmit & Receive”.
	All: (Cover, Figure 2-1, Table 2-3, Table 2-6, Table 2-8, Table 3-4, Section 4.3.2, Section 5.6)	Removed references to 125MHz single-ended clock support and the REF_SEL configuration strap.
	Table 2-3	Updated CONFIG3 pin description to correct list of connection pins.
	Section 4.2.10	Updated bit 11 description (active only when Manual Config. Enable is 1).
	Section 4.2.16	• Added note to MOD bits: “The MOD bits should not be modified and must be preserved when writing to this register.” • Updated bits 8:3 description to indicate they must be written with specific values.
	Section 5.6	Updated second sentence to “If the single-ended clock oscillator method is implemented, XO should be left unconnected and XI should be driven with a nominal 0V-VDD25IO clock signal.”
DS00001871A (12-09-14)	Section 3.6.1, "Hardware Reset (nRESET)," on page 22	Updated section with additional details on power-up sequencing requirements.
	Section 5.5.3, "Power-On Hardware Reset Timing," on page 67	Updated section with additional details on power-up sequencing requirements. Section title and included figures/tables updated.

© 2009-2016 Microchip Technology Inc.

TABLE A-1: REVISION HISTORY (CONTINUED)

Revision Level & Date	Section/Figure/Entry	Correction
Rev. 1.1 (06-03-13)	Section 4.2.4, "PHY Identifier 2 Register," on page 38	Corrected bits 9:4 default values from 0Ch to 0Eh
	Table 2-3, “LED & Configuration Pins,” on page 7, Table 3-4, “Configuration Straps,” on page 24, Note 4-8 on page 49, FIGURE 3-3: RGMII Modes of Operation on page 19	Updated RGMII_ID_MODE description to correct polarity: 1=delay enabled, 0=delay disabled.
	Section 5.3, "Power Consumption," on page 61	Updated power consumption numbers
	Table 2-3, “LED & Configuration Pins,” on page 7, Table 2-6, “Miscellaneous Pins,” on page 9, Table 3-4, “Configuration Straps,” on page 24, Section 5.6, "Clock Circuit," on page 75	Updated XI and REFCLK_SEL definitions/info for clarity.
	FIGURE 2-1: 56-QFN Pin Assignments (TOP VIEW) on page 5, Table 2-1, “RGMII Interface Pins,” on page 6. Table 2-6, “Miscellaneous Pins,” on page 9, Table 2-8, “56-QFN Pin Assignments,” on page 11	Updated pin 21 definition to no connect (NC).
	Section 3.7.1, "General Power-Down," on page 23, Section 3.7.2, "Energy Detect Power-Down," on page 23, Table 3-4, “Configuration Straps,” on page 24, Section 3.8.1.2.2, "Configuring the Mode of Operation (CONFIG[3:2])," on page 26, Table 3-8, “Configuring the Mode of Operation,” on page 26, FIGURE 3-6: Simplified Application Diagram on page 32, Section 4.2.16, "Extended Mode Control/ Status Register," on page 47	Removed references to MACCLK and updated definition of bit 3 of the Extended Mode Control/ Status Register.
Rev. 1.0 (08-02-12)	All	Commercial temperature range set to the standard 0 to 70C (was previously listed as “extended commercial” temp. of 0 to 85C)
Rev. 1.0 (06-29-11)	All	Initial release

THE MICROCHIP WEB SITE

Microchip provides online support via our WWW site at www.microchip.com. This web site is used as a means to make files and information easily available to customers. Accessible by using your favorite Internet browser, the web site contains the following information:

- **Product Support** – Data sheets and errata, application notes and sample programs, design resources, user's guides and hardware support documents, latest software releases and archived software
- **General Technical Support** – Frequently Asked Questions (FAQ), technical support requests, online discussion groups, Microchip consultant program member listing
- **Business of Microchip** – Product selector and ordering guides, latest Microchip press releases, listing of seminars and events, listings of Microchip sales offices, distributors and factory representatives

CUSTOMER CHANGE NOTIFICATION SERVICE

Microchip's customer notification service helps keep customers current on Microchip products. Subscribers will receive e-mail notification whenever there are changes, updates, revisions or errata related to a specified product family or development tool of interest.

To register, access the Microchip web site at www.microchip.com. Under "Support", click on "Customer Change Notification" and follow the registration instructions.

CUSTOMER SUPPORT

Users of Microchip products can receive assistance through several channels:

- Distributor or Representative
- Local Sales Office
- Field Application Engineer (FAE)
- Technical Support

Customers should contact their distributor, representative or field application engineer (FAE) for support. Local sales offices are also available to help customers. A listing of sales offices and locations is included in the back of this document.

Technical support is available through the web site at: http://microchip.com/support

© 2009-2016 Microchip Technology Inc.

PRODUCT IDENTIFICATION SYSTEM

To order or obtain information, e.g., on pricing or delivery, refer to the factory or the listed sales office.

PART NO.	[X]	-	XXXX	-	[X](1)
Device	Temperature Range		Package		Tape and Reel Option

Device:	LAN8820			
Temperature Range:	Blank	=	0°C to +70°C	(Extended Commercial)
	i	=	-40°C to +85°C	(Industrial)
Package:	ABZJ	=	56-pin QFN	
Tape and Reel Option:	Blank	=	Standard packaging (tray)	
	TR	=	Tape and Reel(1)	

Examples:

a) LAN8820i-ABZJ-TR
Industrial temperature,
56-pin QFN
Tape & Reel

b) LAN8820-ABZJ
Extended commercial temperature,
56-pin QFN
Tray

Note 1: Tape and Reel identifier only appears in the catalog part number description. This identifier is used for ordering purposes and is not printed on the device package. Check with your Microchip Sales Office for package availability with the Tape and Reel option. Reel size is 4,000.

NOTES:

© 2009-2016 Microchip Technology Inc.

Note the following details of the code protection feature on Microchip devices:

- Microchip products meet the specification contained in their particular Microchip Data Sheet.
- Microchip believes that its family of products is one of the most secure families of its kind on the market today, when used in the intended manner and under normal conditions.
- There are dishonest and possibly illegal methods used to breach the code protection feature. All of these methods, to our knowledge, require using the Microchip products in a manner outside the operating specifications contained in Microchip's Data Sheets. Most likely, the person doing so is engaged in theft of intellectual property.
- Microchip is willing to work with the customer who is concerned about the integrity of their code.
- Neither Microchip nor any other semiconductor manufacturer can guarantee the security of their code. Code protection does not mean that we are guaranteeing the product as "unbreakable."

Code protection is constantly evolving. We at Microchip are committed to continuously improving the code protection features of our products. Attempts to break Microchip's code protection feature may be a violation of the Digital Millennium Copyright Act. If such acts allow unauthorized access to your software or other copyrighted work, you may have a right to sue for relief under that Act.

Information contained in this publication regarding device applications and the like is provided only for your convenience and may be superseded by updates. It is your responsibility to ensure that your application meets with your specifications. MICROCHIP MAKES NO REPRESENTATIONS OR WARRANTIES OF ANY KIND WHETHER EXPRESS OR IMPLIED, WRITTEN OR ORAL, STATUTORY OR OTHERWISE, RELATED TO THE INFORMATION, INCLUDING BUT NOT LIMITED TO ITS CONDITION, QUALITY, PERFORMANCE, MERCHANTABILITY OR FITNESS FOR PURPOSE**.** Microchip disclaims all liability arising from this information and its use. Use of Microchip devices in life support and/or safety applications is entirely at the buyer's risk, and the buyer agrees to defend, indemnify and hold harmless Microchip from any and all damages, claims, suits, or expenses resulting from such use. No licenses are conveyed, implicitly or otherwise, under any Microchip intellectual property rights unless otherwise stated.

Trademarks

The Microchip name and logo, the Microchip logo, AnyRate, dsPIC, FlashFlex, flexPWR, Heldo, JukeBlox, KeeLoq, KeeLoq logo, Kleer, LANCheck, LINK MD, MediaLB, MOST, MOST logo, MPLAB, OptoLyzer, PIC, PICSTART, PIC32 logo, RightTouch, SpyNIC, SST, SST Logo, SuperFlash and UNI/O are registered trademarks of Microchip Technology Incorporated in the U.S.A. and other countries.

ClockWorks, The Embedded Control Solutions Company, ETHERSYNCH, Hyper Speed Control, HyperLight Load, IntelliMOS, mTouch, Precision Edge, and QUIET-WIRE are registered trademarks of Microchip Technology Incorporated in the U.S.A.

Analog-for-the-Digital Age, Any Capacitor, AnyIn, AnyOut, BodyCom, chipKIT, chipKIT logo, CodeGuard, dsPICDEM, dsPICDEM.net, Dynamic Average Matching, DAM, ECAN, EtherGREEN, In-Circuit Serial Programming, ICSP, Inter-Chip Connectivity, JitterBlocker, KleerNet, KleerNet logo, MiWi, motorBench, MPASM, MPF, MPLAB Certified logo, MPLIB, MPLINK, MultiTRAK, NetDetach, Omniscient Code Generation, PICDEM, PICDEM.net, PICkit, PICtail, PureSilicon, RightTouch logo, REAL ICE, Ripple Blocker, Serial Quad I/O, SQI, SuperSwitcher, SuperSwitcher II, Total Endurance, TSHARC, USBCheck, VariSense, ViewSpan, WiperLock, Wireless DNA, and ZENA are trademarks of Microchip Technology Incorporated in the U.S.A. and other countries.

SQTP is a service mark of Microchip Technology Incorporated in the U.S.A.

Silicon Storage Technology is a registered trademark of Microchip Technology Inc. in other countries.

GestIC is a registered trademarks of Microchip Technology Germany II GmbH & Co. KG, a subsidiary of Microchip Technology Inc., in other countries.

All other trademarks mentioned herein are property of their respective companies.

© 2009-2016, Microchip Technology Incorporated, Printed in the U.S.A., All Rights Reserved.

ISBN: 978-1-5224-0931-1

QUALITY MANAGEMENT SYSTEM
CERTIFIED BY DNV
= ISO/TS 16949 =

Microchip received ISO/TS-16949:2009 certification for its worldwide headquarters, design and wafer fabrication facilities in Chandler and Tempe, Arizona; Gresham, Oregon and design centers in California and India. The Company's quality system processes and procedures are for its PIC® MCUs and dsPIC® DSCs, KEELOQ® code hopping devices, Serial EEPROMs, microperipherals, nonvolatile memory and analog products. In addition, Microchip's quality system for the design and manufacture of development systems is ISO 9001:2000 certified.

Worldwide Sales and Service

AMERICAS

Corporate Office
2355 West Chandler Blvd.
Chandler, AZ 85224-6199
Tel: 480-792-7200
Fax: 480-792-7277
Technical Support:
http://www.microchip.com/support
Web Address:
www.microchip.com

Atlanta
Duluth, GA
Tel: 678-957-9614
Fax: 678-957-1455

Austin, TX
Tel: 512-257-3370

Boston
Westborough, MA
Tel: 774-760-0087
Fax: 774-760-0088

Chicago
Itasca, IL
Tel: 630-285-0071
Fax: 630-285-0075

Cleveland
Independence, OH
Tel: 216-447-0464
Fax: 216-447-0643

Dallas
Addison, TX
Tel: 972-818-7423
Fax: 972-818-2924

Detroit
Novi, MI
Tel: 248-848-4000

Houston, TX
Tel: 281-894-5983

Indianapolis
Noblesville, IN
Tel: 317-773-8323
Fax: 317-773-5453

Los Angeles
Mission Viejo, CA
Tel: 949-462-9523
Fax: 949-462-9608

New York, NY
Tel: 631-435-6000

San Jose, CA
Tel: 408-735-9110

Canada - Toronto
Tel: 905-695-1980
Fax: 905-695-2078

ASIA/PACIFIC

Asia Pacific Office
Suites 3707-14, 37th Floor
Tower 6, The Gateway
Harbour City, Kowloon

Hong Kong
Tel: 852-2943-5100
Fax: 852-2401-3431

Australia - Sydney
Tel: 61-2-9868-6733
Fax: 61-2-9868-6755

China - Beijing
Tel: 86-10-8569-7000
Fax: 86-10-8528-2104

China - Chengdu
Tel: 86-28-8665-5511
Fax: 86-28-8665-7889

China - Chongqing
Tel: 86-23-8980-9588
Fax: 86-23-8980-9500

China - Dongguan
Tel: 86-769-8702-9880

China - Guangzhou
Tel: 86-20-8755-8029

China - Hangzhou
Tel: 86-571-8792-8115
Fax: 86-571-8792-8116

China - Hong Kong SAR
Tel: 852-2943-5100
Fax: 852-2401-3431

China - Nanjing
Tel: 86-25-8473-2460
Fax: 86-25-8473-2470

China - Qingdao
Tel: 86-532-8502-7355
Fax: 86-532-8502-7205

China - Shanghai
Tel: 86-21-5407-5533
Fax: 86-21-5407-5066

China - Shenyang
Tel: 86-24-2334-2829
Fax: 86-24-2334-2393

China - Shenzhen
Tel: 86-755-8864-2200
Fax: 86-755-8203-1760

China - Wuhan
Tel: 86-27-5980-5300
Fax: 86-27-5980-5118

China - Xian
Tel: 86-29-8833-7252
Fax: 86-29-8833-7256

ASIA/PACIFIC

China - Xiamen
Tel: 86-592-2388138
Fax: 86-592-2388130

China - Zhuhai
Tel: 86-756-3210040
Fax: 86-756-3210049

India - Bangalore
Tel: 91-80-3090-4444
Fax: 91-80-3090-4123

India - New Delhi
Tel: 91-11-4160-8631
Fax: 91-11-4160-8632

India - Pune
Tel: 91-20-3019-1500

Japan - Osaka
Tel: 81-6-6152-7160
Fax: 81-6-6152-9310

Japan - Tokyo
Tel: 81-3-6880- 3770
Fax: 81-3-6880-3771

Korea - Daegu
Tel: 82-53-744-4301
Fax: 82-53-744-4302

Korea - Seoul
Tel: 82-2-554-7200
Fax: 82-2-558-5932 or
82-2-558-5934

Malaysia - Kuala Lumpur
Tel: 60-3-6201-9857
Fax: 60-3-6201-9859

Malaysia - Penang
Tel: 60-4-227-8870
Fax: 60-4-227-4068

Philippines - Manila
Tel: 63-2-634-9065
Fax: 63-2-634-9069

Singapore
Tel: 65-6334-8870
Fax: 65-6334-8850

Taiwan - Hsin Chu
Tel: 886-3-5778-366
Fax: 886-3-5770-955

Taiwan - Kaohsiung
Tel: 886-7-213-7828

Taiwan - Taipei
Tel: 886-2-2508-8600
Fax: 886-2-2508-0102

Thailand - Bangkok
Tel: 66-2-694-1351
Fax: 66-2-694-1350

EUROPE

Austria - Wels
Tel: 43-7242-2244-39
Fax: 43-7242-2244-393

Denmark - Copenhagen
Tel: 45-4450-2828
Fax: 45-4485-2829

France - Paris
Tel: 33-1-69-53-63-20
Fax: 33-1-69-30-90-79

Germany - Dusseldorf
Tel: 49-2129-3766400

Germany - Karlsruhe
Tel: 49-721-625370

Germany - Munich
Tel: 49-89-627-144-0
Fax: 49-89-627-144-44

Italy - Milan
Tel: 39-0331-742611
Fax: 39-0331-466781

Italy - Venice
Tel: 39-049-7625286

Netherlands - Drunen
Tel: 31-416-690399
Fax: 31-416-690340

Poland - Warsaw
Tel: 48-22-3325737

Spain - Madrid
Tel: 34-91-708-08-90
Fax: 34-91-708-08-91

Sweden - Stockholm
Tel: 46-8-5090-4654

UK - Wokingham
Tel: 44-118-921-5800
Fax: 44-118-921-5820

06/23/16

© 2009-2016 Microchip Technology Inc.